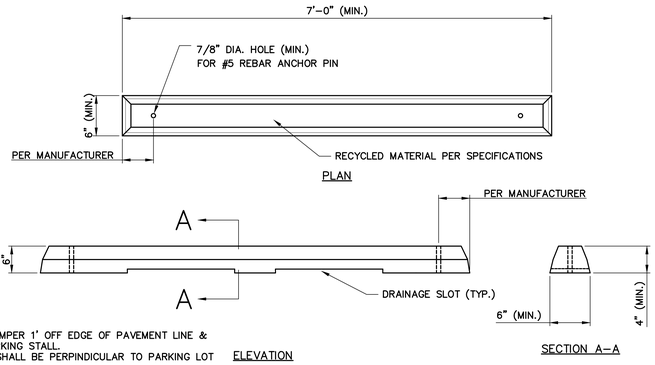

NOTES:

1. PLACE PARKING BUMPER 1' OFF EDGE OF PAVEMENT LINE & CENTER WITHIN PARKING STALL.
2. PARKING BUMPER SHALL BE PERPINDICULAR TO PARKING LOT STALL STRIPING.
3. PARKING BUMPER DETAIL INTENT IS TO DEPICT GENERAL DIMENSIONS OF PARKING BUMPER. PARKING BUMPER SHALL BE SECURED TO PAVEMENT SECTION IN ACCORDANCE WITH MANUFACTURER'S WRITTEN INSTRUCTIONS.

10 PARKING BUMPER
SCALE: NONE

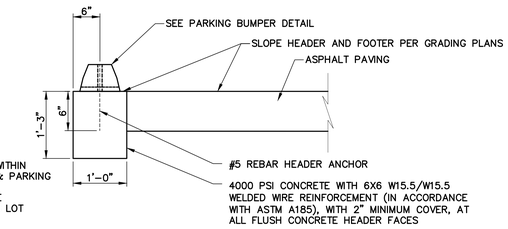

NOTES:

1. CENTER PARKING BUMPER WITHIN FLUSH CONCRETE HEADER & PARKING STALL.
2. PARKING BUMPER SHALL BE PERPINDICULAR TO PARKING LOT STALL STRIPING.

11 FLUSH CONCRETE HEADER WITH PARKING BUMPER
SCALE: NONE

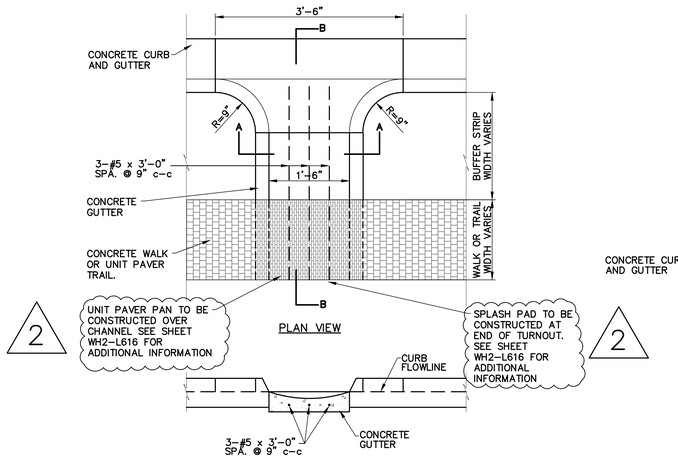

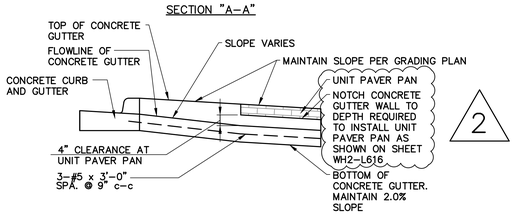

CURB TURNOUT ALONG DRIVE "A"

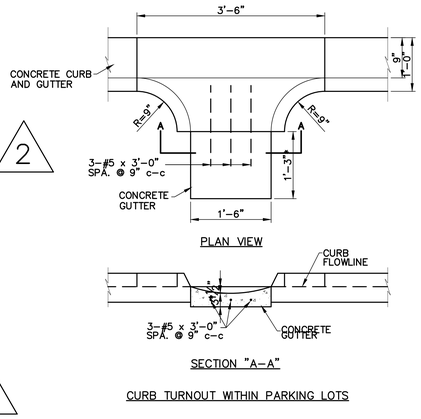

CURB TURNOUT WITHIN PARKING LOTS

13 CONCRETE CURB TURNOUT
SCALE: NONE

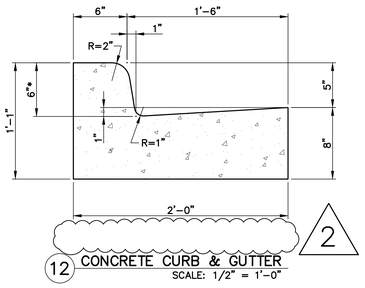

12 CONCRETE CURB & GUTTER
SCALE: 1/2" = 1'-0"

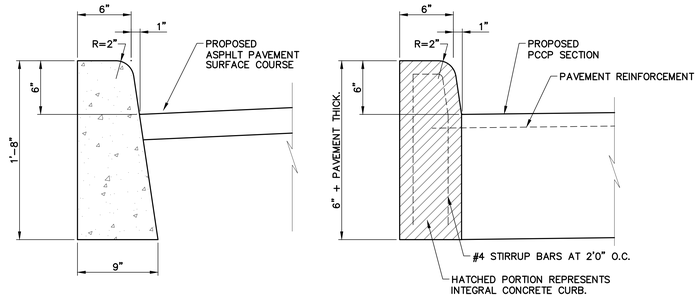

14 CONCRETE CURB, 6"
SCALE: 1/2" = 1'-0"

NOTES:

1. USE INTEGRAL CONCRETE CURB IN ALL LOCATIONS WHERE CONCRETE CURB, 6" ABUTS P.C.C. PAVEMENT.

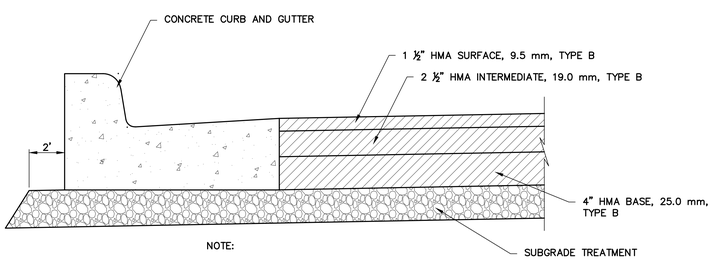

NOTE:

1. PREPARE SUBGRADE IN ACCORDANCE WITH PROJECT SPECIFICATIONS.
2. INTERNAL ROADWAYS REFER TO DRIVES "A", "B", "C" & "D"

TYPICAL DETAIL OF CONCRETE CURB AND GUTTER FOR INTERNAL ROADWAYS WITH HMA PAVEMENT
SCALE: NONE

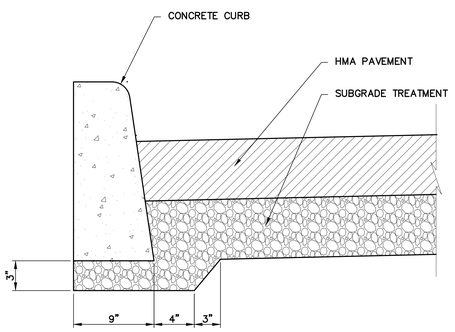

NOTE:

1. PREPARE SUBGRADE IN ACCORDANCE WITH PROJECT SPECIFICATIONS.

TYPICAL DETAIL OF CONCRETE CURB FOR FOR PARKING LOTS WITH HMA PAVEMENT
SCALE: NONE

PAVEMENT SECTION K-1: 1½" HMA SURFACE, 9.5 mm TYPE "B" ON 2½" HMA INTERMEDIATE, 19.0 mm TYPE "B" ON 8" HMA BASE, 25.0 mm TYPE "B" SUBGRADE TREATMENT, TYPE IC

PAVEMENT SECTION K-2: 1½" HMA SURFACE, 9.5 mm TYPE "B" ON 4½" HMA INTERMEDIATE, 19.0 mm TYPE "B" ON 6" COMPACTED AGGREGATE BASE, NO. 53 SUBGRADE TREATMENT, TYPE IB

PAVEMENT SECTION K-3: 1½" HMA SURFACE, 9.5 mm, TYPE "B" ON 2½" HMA INTERMEDIATE TYPE, 19.0 mm "B" ON 11" HMA BASE, 25.0 mm, TYPE "B" SUBGRADE TREATMENT, TYPE IC

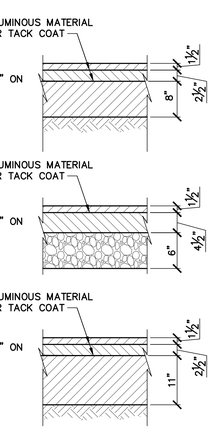

TYPICAL PAVEMENT SECTIONS
SCALE: NONE

NOTE:

1. MAXIMUM LIFT THICKNESS FOR ANY HMA COURSE SHALL BE IN ACCORDANCE WITH THE PROJECT SPECIFICATIONS.

ESKENAZI WOMEN'S GARDEN
INDIANAPOLIS, INDIANA

Owner
Health & Hospital Corporation d.b.a. Eskenazi Health
720 Eskenazi Avenue
Indianapolis, IN 46202
(317)880-0000

Architect
RATIO Architects, Inc.
101 South Pennsylvania Street
Indianapolis, Indiana 46204
(317) 633-4040

Civil Engineer
VS Engineering, Inc.
203 Main St., Suite 102
Evansville, Indiana 47708
(812) 401-0303

Electrical Engineer
Biaggi Chance Cummins London and Titzer (BCCLT)
300 Northwest Second Street
Evansville, Indiana 47708
(812) 423-4407

Irrigation Design
Irrigation Design Source
112 Shadowlawn Drive
Fishers, Indiana 46038
(317) 842-3123

Structural Engineer
American Structurepoint, Inc.
7260 Shadeland Station
Indianapolis, IN 46256
(317)-547-5580

KEY PLAN

SEAL | DATE 04/20/18

NICHOLAS R. JAHN REGISTERED NO. 10910591 STATE OF INDIANA PROFESSIONAL ENGINEER

SHEET ISSUE

1	BID SET	04/05/18
2	ADDENDUM NO. 1	04/20/18

RATIO

COPYRIGHT NOTICE: THIS ARCHITECTURAL AND ENGINEERING DRAWING IS GIVEN IN CONFIDENCE AND SHALL BE USED ONLY PURSUANT TO THE AGREEMENT WITH RATIO ARCHITECTS, INC. NO OTHER USE, DISSEMINATION OR DUPLICATION MAY BE MADE WITHOUT PRIOR WRITTEN CONSENT OF RATIO ARCHITECTS, INC. ALL COMMON LAW RIGHTS OF COPYRIGHT AND OTHERWISE ARE HEREBY SPECIFICALLY RESERVED.

PROJECT NO. 17038.000

SHEET TITLE
MISCELLANEOUS SITE DETAILS

SHEET NUMBER
WH2-C003

File Name: E:\Thinkwork_CL_30x42.dwg
Plot By: Nicholas Jahn
Last Save Date: April 7 2011 06:14:28pm
User Name: Jahn, Nicholas
Plot Scale: 1:1 (Large Format\30x42), Dimension Scale: 1:1 (LARS Tech)