Pepper Construction
Tomorrow Transformed

1850 W 15th Street, Indianapolis, IN 46202
317.681.1000 (Main) | 317.684.9694 (Fax)

ADDENDUM NO. 2

PROJECT: **BCSC - New Elementary School #12 - Maple Grove**
Tipton Lakes Blvd.
Columbus, IN 47201

OWNER: **Bartholomew Consolidated School Corporation (BCSC)**
1200 Central Avenue
Columbus, IN 47201

ARCHITECT: **CSO Architects**
8831 Keystone Crossing
Indianapolis, IN 46240

Höweler + Yoon Architecture
150 Lincoln Street
Boston, MA 02111

CONSTRUCTION MANAGER: **Pepper Construction**
1850 W 15th Street
Indianapolis, IN 46202
317.681.1000

This Addendum is incorporated with the Contract Documents for this Project and contains clarifications and revisions to the Contract Documents.

The information contained herein modifies the original Bidding Documents. Requirements of the original Bidding Documents remain in effect except as modified by this Addendum.

Bidders must acknowledge receipt of this Addendum on the Bid form. Failure to acknowledge receipt of this Addendum may result in disqualification.

CLARIFICATIONS

1) Please refer to the Project Bid Manual for the most up to date bid packages & bid due dates.
2) **No** performance/payment bond is required.
3) Bid Packages - BP-09: Plumbing & BP-10: HVAC and Geothermal moved to **Bid Day #2 - 6/26/25**.

Q & A

1) Updated **RFI log** dated 6/18/25 has been included.

SUBSTITUTIONS

1) Reference the RFI log for any substitution request status.

1850 W 15th Street, Indianapolis, IN 46202
317.681.1000 (Main) | 317.684.9694 (Fax)

ADDENDUM NO. 2

DOCUMENT MODIFICATIONS

A. Project Bid Manual

1) The following bid packages have been updated:

   a) BP-03: Precast
   b) BP-04: Structural & Misc. Steel
   c) BP-05: Glass & Glazing and Metal Panels
   d) BP-06: Membrane Roofing
   e) BP-09: Plumbing
   f) BP-10: HVAC
   g) BP-11: Electrical/Low Voltage/Security/Fire Alarm/HVAC and Door Rough-ins/Pathways
   h) BP-12: Fire Suppression
   i) BP-16A: Interior and Exterior Framing, Sheathing, Gypsum, Blocking and Finishing
   j) BP-16B: Ceilings
   k) BP-17A: General Trades: Door Systems
   l) BP-24: Tiling

B. Project Spec Manual

1) Reference specification updates noted in the Addendum 2 narrative by CSO.

C. Plans

1) Reference drawing updates noted in the Addendum 2 narrative by CSO.

D. Schedule & Site Logistics:

1) Updated **schedule** dated 6/18/25 is included.

RFI LOG

Originator	RFI Description	Question	Response	Ball in Court	Date Opened	Status
Pepper	Spec Section Differences 90% to 100% CD's	There are some specifications that were included in 90% CD's but aren't in 100% CD's and vise versa. Is the 100% CD list the best and final or do previous sections still apply? See 05 12 13 from 90%'s no longer in 100%'s for example. (2025-06-03 MO)	The current spec list is best and final. There is no AESS on the job. -ECN	CSO	2025-06-03	Closed
HDI Railings	Substitution Request - Railings	See substitution request submitted to design team. (2025-06-03 MO)	Approved. Will be added via ADD 1. -ECN	CSO	2025-06-03	Closed
Pepper	100% CD Spec Table of Contents Confirmation	12 93 00 Site furnishings is listed on the 100% spec table of contents. Assuming this is just a typo/accidental add because the spec in this location of the bid manual is 32 33 00. Please confirm. (2025-06-04 MO)	This is correct. It was a naming issue on our side. To be corrected in ADD 1. -ECN	CSO	2025-06-04	Closed
TBCCI	Asphalt Paving Sections	Asphalt paving sections shown in details 201,202/C800 are different than sections shown in details 1,2/L600. Please advise.	The sections in the L series are correct per Geotech recommendations. Civil will remove asphalt details from Sheet C800 in forthcoming addenda	CEC	2025-06-04	Closed
TBCCI	Playground Equipment - Sway Bench Specifications	Keynote F27 GameTime Sway Bench is scheduled with the playground equipment on sheet L110 but is not specified in section 11 68 00. Please advise.	Sway Bench has been added to the Site Furnishing Spec. 323300 - LAM	Context	2025-06-04	Closed
TBCCI	Playground Equipment - Sway Bench Locations	On sheet L110 there is a keynote F27 tag at the east end of the playground but no bench is depicted on the drawing like the other two locations. Please clarify.	This was an extra keynote and will be removed in ADD1 - LAM	Context	2025-06-04	Closed
TBCCI	Playground Equipment - Basketball Goal Specifications	Keynote F30 on sheet L110 indicates basketball goals to be Goalrilla and refers to the specifications. Section 11 68 00 – 2.1 A.19 indicates basketball goals to be Gared Sports. Please clarify.	Specification is correct. Goalrilla reference has been removed from sheet L110 - LAM	Context	2025-06-04	Closed
TBCCI	Playground Surfacing - Mound Size	Keynote F16 on sheet L110 indicates a 10' mound. Section 32 18 18 – 2.1 B.1.b indicates an 8' mound. Please clarify.	10' mound is correct. This will be updated in ADD 1 - LAM	Context	2025-06-04	Closed
Pepper	Mockups	Specification section 01 45 10, section 1.03 references a visual, stand-alone mockup. However a mockup detail has not been issued in the drawings. Please provide to ensure mockup costs do not exceed $50,000.	An exterior wall mockup drawing will be added in addendum 1. -LNM	CSO		Closed
Pepper	HVAC Commissioning	Specification section 23 08 00 indicates there is a 3rd party Commissioning agent. Please confirm that the owner will contract direct with the Cx agent. Pepper and its subcontractors has included coordination with commissioning agent per the specification.	The contract for the Commissioning agent will be carried by the Mechanical Contractor. The Owner will not direct contract with the Cx agent.	REDimond	June 5 2025	Closed
Midwest Cabinet Solutions	Casework Manufacturer Substitution Request	See substitution request submitted to design team. (2025-06-06 MO) Pepper sent response to CSO on 6/12/25.	This is not an acceptable manufacturer for this scale of project. -ECN	CSO	2025-6-6	Closed
Jerico	Stainless vs Alum. Handrails 05 52 13	Sheet #A460, A462 & A463 Note The Stair Hand Railings "05 52 13-A 1 1/4" Stainless Steel Handrail", However, Spec. Section #05 52 13 is Stated "Aluminum Pipe & Tube Railings". Are The Hand Railings for The Stairs Meant to Be Stainless Steel or Aluminum ? (2025-06-07 MO)	The intent is stainless steel at the glass railing - 05 73 00. Spec to be updated. Aluminum is at the remainder of the stair locations. -ECN	CSO	2025-06-07	Closed
MAB Associates	A202A and A202B Handrail heights	Sheets A202A and A202B, Plan note #6 calls out a 4' high glass rail, but section cuts for the interior rail shows 42" high. Please clarify heights. (2025-06-07 MO)	CSO to revise plan note 6 to read 42". Only exterior locations have 48" requirement. -ECN	CSO	2025-06-07	Closed
CIH	Operable Panel Partition Finish	There does not appear to be a finish called out for the operable panel partition. Please confirm desired finish. (2025-06-09 MO)	Finish to be selected on 800 series sheet via ADD #1 - ECN	CSO	2025-06-09	Closed
Euronique	12 32 16 P-Lam Substitution Request	See substitution request submitted to design team. (2025-06-09 MO)	Approved. Will be added by ADD #1. - ECN	CSO	2025-06-09	Closed
GLHS	Food Service Equipment Details	Referring to K102, items 53, 57, and 63. 53 and 57 are 42" deep per sections 12 and 13 on K601 but about 10" larger on plans. General practice is not to scale off drawings, but with a 10" difference, please confirm sections cut depths are correct. Additionally, are there any details/sections for 63 tray carts? (2025-06-09 MO)	The counters are 42" with a 10" tray slide. See Addendum #1 - RDG	CSO	2025-06-09	Closed
Jerico	A460 Caps	Section 6 on Sheet A460 Has Both Keynotes 57300-D & 57300-E, Stainless Steel Glass Cap and Wood Cap. Is It The Intention to Have Wood Cap at The Stair? And If So, What About the Corridor #204 That is Connected? It is Noted as Stainless Steel There. (2025-06-09 MO)	All caps will be stainless steel. Revised in ADD #1. -ECN	CSO	2025-06-09	Closed
C-Cat	T300 Detail 2 Copper Cable Type	Per Drawing T300, Detail #2, we are to provide and install a 25pr copper cable from the MDF to the IDF's. Can you clarify what type of 25pr copper cable we are to provide, (Cat3 or Cat5e)? (2025-06-09 MO)	Cat3 is sufficient - JKK	D27	2025-06-09	Closed
C-Cat	Outdoor Camera/AP Location Wiring	Regarding Drawing T001, fiber is called out for two of the seven camera and/or AP outside locations. Can you clarify what is required for the other five locations? All locations, minus Camera C-12 are beyond the 100m cable distance. Will extended distance cable be approved or do we need to provide fiber to all locations over 100m? (2025-06-09 MO)	Refer to detail 6/T402 for requirements. Intent of sheet note on T001 is to indicate additional strands required to support Wireless Access Point - JKK	D27	2025-06-09	Closed
C-Cat	T300 Detail 2 Wan Provider Location	Can you provide the location of the WAN Provider so we can get the length of the copper/fiber backbone required? (2025-06-10 AD)	Numbering on detail will be revised in Addendum #2 to denote cabling from WAN provider is provided and installed by the WAN provider. - JKK	D27	2025-06-10	Closed
Spohn	05 73 00 Substitution Request - Hollaender	See substitution request submitted to design team. (2025-06-10 MO)	This was approved in Addendum 1.	CSO	2025-06-10	Closed
R and M Electric	27 15 43 Substitution Request - Superior Essex Cable & Ortronics devices	Substitution Request - Can Superior Essex Cat 6A cable and Ortronics Cat 6A jack modules be acceptable manufacturers in addition to Panduit? (2025-06-10 AD)	Superior Essex Cable is acceptable. Ortonics connectivity is not acceptable. - JKK	D27		Closed
Pepper	Structural Steel AISC Requirement	Specification section 05 12 00 requires the steel fabricator is AISC certified. Can this requirement be waived? SMI is not AISC certified but is a member and implements a quality program that is equal to or exceeds the requirements in the AISC certification program. We are also an IDOA Certified facility and have a successful history of projects of similar size and scope.	The AISC requirement will not be waived for this project. -LHB	LHB		Closed
Pepper	Glass Railing Wood Cap	Details 4 and 5/A460: Define species and stain color of wood cap on glass rail.	Please see previous answers regarding railings. To be addressed in ASI 1. -ECN	CSO		Closed
American Floor Covering Inc	Alternate #5 Clarification	It is assumed that the alternate #5 rugs are provided in addition to the carpet tile and LVT in the respective areas. Please confirm that is the case and the rugs are not provided in lieu of the carpet tile/LVT.	That is correct. -ECN	CSO	2025-06-10	Closed
TBCCI	Site Furnishings - Revised Section 32 33 00 Missing from Addendum 1	Addendum #1 narrative indicates that a revised section 32 33 00 Site Furnishings is included, however we do not find the revised section included in the Addendum. Please advise.	This specification section was inadvertently omitted from addendum 1 and will be issued with addendum 2. -CSO	CSO	2025-06-11	Closed
Pepper	07 42 43 Substitution Request - Architectural Metals North America (AMNA)	See substitution request submitted to design team on 6/11/25.	Approved. -ECN/CSO	CSO		Closed
Pepper	07 54 19 - Substitution Request - Duro-Last	See substitution request submitted to design team on 6/11/25.	Does not appear to meet specification written based on district standard provided by Owner. -ECN/CSO	CSO		Closed
Pepper	Addendum #1 Clarification	Ref: 3.027. Can drawing A450 be re-issued in the next addendum that implements this change?	Yes, this sheet can be reissued for graphical clarity. -CSO	CSO		Closed
Pepper	E100 Valve Pits/Vaults	Can you please confirm who's responsible for providing and installing the vaults shown on drawing E100?	BP-01 scope item YY covers 1 of the 3 vaults in question – the one at the east end of the site labeled Valve Pit on E100. This one is for the fire/domestic water service and shown on C501 Utility Plan. The other 2 vaults, labeled Valve Vault #1 and Valve Vault #2 on E100, are for Geothermal per M100 and are scoped in BP-10 per item LL.	Pepper	6/12/25	Closed
SPS Corporation	08 41 13 Spec Clarification	The spec section 084113 – Aluminum-Framed Entrances and Storefronts calls for BOD product "Tubelite TU2400(0)", which is an ultra-thermal storefront system and only comes as a center-set configuration. This conflicts with line 2.03, A, 3. which calls for a Front Glazing. That said, line 1.04, K calls for a U-Factor of not more than 0.69 Btu/sq.ft. x h x deg F. This U-Factor can be achieved with standard exterior storefront (with does have a front set configuration) with the glass specified in 088000. With this in mind, can standard front-set exterior storefront be carried for spec section 084113?	The drawings were based on Tubelite T14000 I/O. The system is to be front-glazed as shown on drawings. The information related to the BOD model number will be updated in addendum #2. -ECN/CSO	CSO	2025-6-12	Closed
Breckenridge Kitchen Equipment and Design	Kitchen Equipment Item #34 TPL or DBL unit	The plans and the specs do not match for item #34. Spec's call for a TPL unit but the plans and mechanicals appear to be a DBL unit. Please confirm which unit is correct.	Provide per plan (1) Accutemp #E64803E140 DBL, Double Stack Steamer w/ #SNH-20-01, Stand - RDG	Reitano	2025-6-12	Closed
Anderson Aluminum	D3 Aluminum Door Types (A502 & 08 41 13 2.05.A.2)	Referring to A502 & 08 41 13 2.05.A.2. Please clarify door types for doors V101-3 (D), V101-4 (D), V103-4 (D), V103-5 (D), V-103-6 (C). These five doors are listed as D3 which is a door with 8" stiles. This is not common and does not appear to align with specs. Should the door type should be D4?	This door type should be D4. -LNM/CSO	CSO	2025-6-12	Closed
Anderson Aluminum	08 41 13 2.05 Clarification	Please confirm that the door thickness is not required to be 1-3/4" for the project and that 2" or 2-1/4" thick thermally broken doors are permitted as long as they meet all other specification requirements. Not every listed approved manufacturer under 08 41 13 2.01 has a 1-3/4" thick thermal door.	Doors thicker than 1-3/4" are permitted as long as they meet all other specification requirements and are coordinated with the storefront or curtainwall system. - LNM/CSO	CSO	2025-6-12	Closed
Anderson Aluminum	08 41 13 1.10.B FINISH WARRANTY PERIOD	Referring to 08 41 13 1.10.B.1. Please clarify what the special warranty is to be for anodized finishing as 08 41 13 has both anodized and painted finishes. Specification states 20 year finish warranty. However, that is not available in anodized finishing. Most manufacturers warranty up to 10 years (extended) on anodized finishing.	Ten year warranty is acceptable. Clear anodized will be at interior locations, while painted finish is at exterior. -ECN/CSO	CSO	2025-6-12	Closed
Elevate	07 54 19 Substitution Request - Elevate	See substitution request submitted to design team on 6/16/25.	Does not appear to meet specification written based on district standard provided by Owner. -ECN/CSO	CSO		Closed
Lee Company	10 21 13 Substitution Request - ASI	See substitution request submitted to design team on 6/XX/25.	Approved. Added by ADD 02 -ECN/CSO	CSO		Closed
Pepper	Performance & Payment Bond	Are subcontractors required to provide a performance and payment bond?	Bid bond is required, performance and payment bond is not	Pepper	6/13/25	Closed
Snider Recreation	11 68 00 - Substitution Request	See substitution request submitted to design team on 6/13/25	Response is included in Add. 2	Context		Closed
Pepper	Doors, Frames & Hardware	Door 225 (Mechanical Room C225) is listed as a wood door with G2 glass type, but also lists door type D1, which does not have a door lite for glass. Should this door be listed as D2, D3, D4 or D7 door types? Or should there not be a glass type listed for the door?	This door should be D1 with no glass. - LNM/CSO	CSO	6/13/25	Closed

Pepper	Doors, Frames & Hardware	Door 179-2 (exterior doors, Mech./Elec. D179) is listed as an aluminum door with G1 glass type, but also lists door type D1, which does not have a door lite for glass. Should this door be listed as D3 or D4 door types? Or should there not be a glass type listed for the door?	This door should be D1 with no glass. - LNM/CSO	CSO	6/13/25	Closed
Pepper	Doors, Frames & Hardware	Door 182 (exterior door, Water Riser D182) is listed as an aluminum door with G1 glass type, but also lists door type D1, which does not have a door lite for glass. Should these doors be listed as D3 or D4 door types? Or should there not be a glass type listed for the door?	This door should be D1 with no glass. - LNM/CSO	CSO	6/13/25	Closed
Pepper	Glazed Aluminum Curtainwall	BP-05 scope of work items 14 and 17 imply the need for firestopping, insulation, and back pans, typically found where the curtain wall passes a floor/slab edge. However, their does not appear to be any location on the drawings where the curtain wall passes the slab edge. Can you confirm these scope of work items are incorrect and unnecessary? Can you confirm there is no firesafing/insulation/backpans on this project?	If curtainwall does not bypass the floor/slab edge, this would not apply.	Pepper	6/13/25	Closed
Pepper	Doors, Frames & Hardware	BP-05 scope of work item 23 indicates including fire-rated borrowed doorlites, however the door schedule does not indicate if the door/frame is to be fire-rated or non-rated. Could a column be added to the door schedule (A501-A502) to indicate the fire-rating of all door on the project? If there is fire-rated borrowed lites on this project, can you indicate as BOD manufacturer to be used?	There are no rated frames or lites on this project. -CSO	CSO	6/13/25	Closed
Pepper	Glass Handrail	Can you confirm the glass handrail is not in BP-05 scope of work?	Correct. Glass handrails are to be included in BP-04 Structural & Misc. Steel	Pepper	6/13/25	Closed
Pepper	Glazing Film	Is the glazing film to be provided at all private office storefronts in the main admin and guidance office areas to be "WG1" referenced in 088700, 2.03, A?	Delete 3.05 in its entirety. WG1 not required in office/guidance. -ECN/CSO	CSO	6/13/25	Closed
Pepper	Glass & Glazing	Glass type "G3" on the Glass Schedule on A501-A504 does not appear in the 088000 – Glazing Spec. Is it supposed to be what is referenced in the 088853 -Security Glazing? Is it supposed to be both insulated and non-insulated versions? It appears in both exterior and interior aluminum frames. (Exterior: F26 ; Interior: F8, F8A, F15, WD6)	G3 - INSULATED LAMINATED SECURITY GLAZING is the security glazing specification.	CSO	6/13/25	Closed
Pepper	Generator	Is the Owner wanting a diesel generator or NG? Also, what is the run time required?		REDimond	6/13/25	
Pepper	Civil CAD Files	Earthwork contractors have requested the Civil CAD files in order to perform their takeoffs (existing topo, proposed/site, surface files, etc.). Can this be provided?	Sent to Pepper 6/13/25. -CSO	CEC	6/13/25	Closed
Pepper	09 84 33 Sound-Absorbing Wall Units	Spec. Section 09 84 33 (Sound-Absorbing Wall Units) does not appear to be included in any of the Bid Package Descriptions. Can you confirm which Bid Package will include it?	This will be included with BP-16B.	Pepper	6/13/25	Closed
Pepper	Landscaping	Specifications call for a Lo-mow seed mix – confirming this is the variety.	This is not correct. Please see updated mix in Add. 2	Context	6/13/25	Closed
Pepper	Landscaping	Specifications are calling for 12-month maintenance for turf areas – Confirming that it is expected to water the turf areas for the period of 12 months Confirming that weekly mowing of the specified "Lo-mow" grass is NOT required - being that all of the turf areas is "Lo-mow" no mowing is necessary	Watering is required until full coverage is achieved. Owner will take over maintenance for turf areas after 90 days. Any reseeding will be required by City Stormwater agency. Frequency and heights of mowing are in specification 329200 Section 1.8 Lawn Maintenance. These apply to both lo-mow and bluegrass blends to encourage growth.	Context	6/13/25	Closed
Pepper	Sediment & Erosion Control	Specification is indicating that the erosion control blanket on slopes per the Civil Plans after permanent seeding is to be by the landscape contractor.	It is unclear in this question where this is referenced. Per civil plans (Detail 904 on Sheet C904), the preparation of soil, including seed, shall be done prior to installing blankets. State Construction Stormwater General Permit requires the spreading of seed for any soil left exposed (or in this case, where erosion control blanket will be installed).	CEC	6/13/25	
Pepper	Site Furnishings	Confirming that the footing & necessary grounding is required by the landscape contractor for the Flagpole.		Pepper	6/13/25	
Pepper	BP-01 Earthwork & Site Utility Alternates	Exhibit B BP-01 – Earthwork (01 00 01-7) states the following alternates. Please advise which Alternates are associated with BP-01: 1.6 DESIGN ALTERNATES	1. Alternate #1: Site Aggregate Path Alternate. Yes. BP-01 will have additional tree clearing, grading, and stone base plus granite fines surfacing for the pathway. 2. Alternate #2: Playground Surfacing Alternate. No. By BP-14 Playground Surfacing & Equipment 3. Alternate #3: Telescoping Stands and Retractable Audience Seating Alternate. No. By BP-17B General Trades 4. Alternate #4: Motor Operated Roller Shades Alternate. No. By BP-23 Window Treatments 5. Alternate #5: Area Rugs Alternate. No. By BP-19 Flooring 1.7 CONSTRUCTION ALTERNATES 1. Alternate #1: Site Concrete No. By BP02A and BP-22 2. Alternate #2: Joint Sealants, Acoustical Sealants, Firestopping No. Multiple Trades. See Alternate description in specification section 01 24 00.	Pepper	6/13/25	Closed
Pepper	32 33 00 Substitution Request Sway Bench	See substitution request submitted to design team on 6/13/25	Approved	Context	6/13/25	Closed
Pepper	27 15 13 General Cable	Can General Cable (Prysmian) be added to the acceptable manufacturer list?	Prysmian is acceptable. -JKK	D27	6/13/25	Closed
Blakley's	Alternate #5 Broadloom vs Carpet Tile	Manufacturer has confirmed the rugs specified for alternate #5 come in carpet tile only. On the rug alternate schedule, they are called out as "broadloom". Please confirm carpet tile is acceptable.	Manufacturer revised in ADD 2. See sheet A800. RNR/CSO	CSO	2025-6-16	Closed
Durbin Enterprises	Geothermal - Water Requirements	Is it intentional that the spec's call for the geothermal contractor to provide their own water for the project, or is that part of the spec carried over from the Test Hole Spec's? It's pretty easy to haul water for a test hole, but very expensive to haul it for a full production job. If it is not intentional, the schedule will need to be modified so that water is available on site before geothermal drilling. The current schedule shows drilling complete right about when the water is to be on site.	The schedule line for water is for site water piping install. A line will be added to the schedule showing temp water available on site - which will be prior to geothermal wells starting.	Pepper	2025-6-16	Closed
Durbin Enterprises	Geothermal Vault Material	Would poly vaults be allowed in place of concrete vaults?	Poly vaults are acceptable, but must meet all of the performance and functional requirements as included in the concrete valve vault design. Contractor will be responsible for any additional requirements for poly vault design and installation.	REDimond	2025-6-16	Closed
Durbin Enterprises	Geothermal Vault #2 Detail	Is there a detail for Vault #2?	Detail for Vault #2 is similar to Vault #1.	REDimond	2025-6-16	Closed
Durbin Enterprises	Geothermal Spec Vs Drawing Discrepancies	Possible conflict between drawings and spec's. Drawings show 1" loops 400 ft deep, however in the spec it says the following: b. Only the following standard sizes of HDPE 4710 are acceptable: 1) 1.00" IPS SDR-11 for well depths of 350 ft. or less 2) 1.25" IPS SDR-9 for well depths greater than 350 ft. up to a maximum of 500 ft. Please confirm the loop diameter and SDR. 1" and 1.25" premade loops are available in both DR9 and DR11 for 400 ft lengths.	1.00" SDR-11 is allowed up to 400 ft depths. This will be clarified in Addendum #2.	REDimond	2025-6-16	Closed
Durbin Enterprises	Geothermal Bury Depth	The drawings show a 48" bury depth but the spec's say 60". Which is correct?	48" buried depth is correct. This will be clarified in Addendum #2.	REDimond	2025-6-16	Closed
Durbin Enterprises	Geothermal Drilling Fluid Additives	The drill log in the TC Test report indicates that there is a high likelihood that drilling fluid additives may be needed to hold sand and gravel zones in place, yet the spec's say in 3.12 that nothing but potable water may be used. Based on this, mud rotary drillers will not be very effective. Will additives be allowed?	If required, drilling fluid additives will be acceptable. This will be clarified in Addendum #2.	REDimond	2025-6-16	Closed
Burkett	Foodservice Equipment	Item 47/48 - Champion is listed as an approved alternate for Item #48 Dish Machine Blower Dryer but is not for Item 347 Dishwasher. Is Champion approved for Item #47 Dishwasher as well or should they be removed from Item #48 since this is part of the dishmachine?	Champion is not approved for the Dishwasher or Blower Dryer - RDG	CSO	6/16/25	Closed
Burkett	Foodservice Equipment	Item #47.1 – Condensate Fan is by Mechanical. KEC is responsible for the duct risers from the dishwasher. Who is responsible for the ductwork?	Duct risers shown on the kitchen equipment drawings by KEC. All other dishwasher ductwork is furnished and installed by BP-10 HVAC & Geothermal.	Pepper	6/16/25	Closed
Burkett	Foodservice Equipment	Item #66 - Section 11400 calls for Qty. 4, but drawing FS K200 equipment schedule calls for qty. 6. Please confirm.	QTY of Four (4) per the specifications - RDG	Reitano	6/16/25	Closed
Snider Recreation	Substitution Request - 32 33 00 Site Furnishings USA Shade	See substitution request submitted to design team on 6/16/25.	Approved. Added in ADD 02. -Context		6/16/25	Closed
NEIS	Rakks Ethereal Shelves material/color	In regards to the Rakks Ethereal floating shelves (SH1, SH2) as shown in Elevations 10,11,12,16/A653, the plan calls for PL1 shelves, yet spec section 064023 reads white maple hardwood. I have been informed by Rakks that neither PL1 or maple hardwood is an option. The colors are Oak, Acacia, White and Black. Please confirm color selection.	Rakks is the basis of design for the bracket, the wood shelves should be custom per the specification. We will revise the PL1 plan callouts in addendum 2 - LNM/CSO	CSO	6/16/25	Closed
NEIS	Display Cases Scope Clarification	Please confirm that the display cases are pre-manufactured units and are the responsibility of the 101200-spec provider and not consider custom millwork.	Correct, the display cases are pre-manufactured per A900 and are included in BP-17B, not the millwork package.	Pepper	6/16/25	Closed

NEIS	Countertop Type Clarification	According to the finish plans all countertops are SS1, SS2 solid surface. This is contradicted when viewing the casework elevations, the plans call for CT2 and CT3 which are PL2 plastic laminate. Almost all countertops contain a sink. Is the intent for the countertops with sinks to be solid surface and the tops without sinks to be laminate, please clarify.	PL2 plastic laminate is not listed in the casework schedule. Refer to 800 series finish plans for countertop finishes. - LNM/CSO	CSO	6/16/25	Closed
NEIS	GH1 Info	Elevation 6/A650 shows "GH1" which looks to be wall mounted guitar hanging brackets. These are not in the casework schedule, please provide details.	Information for "GH1" can be found in the A900 series specialty equipment schedule. -LNM/CSO	CSO	6/16/25	Closed
NEIS	Upholstered Cushions Scope Clarification	Are the upholstered cushions at the seating nooks by the furniture provider?	Upholstered seating to be contractor provided. See spec section 064023 Architectural Woodwork. Will be reissued in addendum 2. -RNR/ CSO	Pepper	6/16/25	Closed
NEIS	P8 Paint Color	Can the paint color for P8 be provided? The powder coat color for the metal wrapped stainless steel benches need to match P8 and the vendor is requesting the color to accurately quote the benches.	P8 will be matched to a RAL color for powder coat color. -RNR/CSO	CSO	6/16/25	Closed
NEIS	Substitution Request 12 32 16 Case Systems	See substitution request submitted to design team on 6/16/25.	Acceptable. -ECN/CSO	CSO		Closed
Ground Loop Solutions	Geothermal - Vertical Bore Grouting	Reference specification section 232113.33, 2.2, B,1. Would powerTec graphite be an acceptable alternative to silica sand for the grouting of the vertical bores?	Yes, this would be acceptable.	REDimond	6/16/25	Closed
Pepper	Substitution Request - 07 54 19 GAF EverGuard PVC	See substitution request submitted to design team on 6/16/25.	Does not appear to meet specification written based on district standard provided by Owner. -ECN/CSO	CSO	6/16/25	Closed
SPS Corporation	Extruded Polystyrene Insulation	Extruded polystyrene insulation does not meet NFPA 285 standards behind metal panels. Additionally, all manufactured extruded polystyrene carries a R-5 per inch so none of them could hit an R-16.8 at 3". This job looks better suited for a polyiso substitute because it give them a R-19.5 or better at 3" and would meet the necessary codes. Attached below is the link to the item we would like to quote which meet all the parameters. https://www.atlasrwi.com/products/wall/residential-light-commercial/energyshield-xr-2	Indiana does not use NFPA 285. The polystyrene specified is high-value polystyrene with an R-value of 5.6 (Dow Cavitymate Ultra or Owens Corning Foamular High-R CW Plus) -ECN/CSO	CSO	6/16/25	Closed
Hoosier Glass	Doors, Frames & Hardware	The door schedule on A501 and A502 calls for some of the aluminum doors to be D1, D3, and D4 D1 is a flush door. D3 is a stile and rail door with 8" vertical stile. D4 is stile and rail with 5" vertical stiles. Specification 084113 call for the doors to be wide stile and rail thermally broken doors. The specification matches the D4 door. If the architect wants to utilize door type D1 and D3 using aluminum doors, they will need to issue a specification. D1 and D3 would not be thermally broken as shown. Please confirm all aluminum doors are to be D4 type doors.	The D3 aluminum doors will be revised to D4 and the 08 41 13 specification will be modified to include a thermally broken flush aluminum door in Addendum 2. - LNM/CSO	CSO	6/16/25	Closed
Hoosier Glass	Aluminum Doors, Frames and Hardware	Please confirm interior vestibule doors do not need to be thermally broken.	Correct - LNM/CSO	CSO	6/16/25	Closed
Hoosier Glass	Glass	Door V103-4 F8A, V103-5 F15, and V103-6 F8A call for the door lites and the sidelites below 7' to be glass type G3. The glass above 7' is G5. G3 shows insulating laminated security glass G5 is ¼" clear tempered. Please confirm the G3 glass specified as 3/8" in section 088853 Security glass does not need to be insulated glass.	The glass in these doors still needs to be security glass, but does not need to be insulated. This will be addressed in addendum 2. - LNM/CSO	CSO	6/16/25	Closed
Waukegan Steel	Substitution Request - 05 51 13 Waukegan Steel	See substitution request submitted to design team on 6/16/25.	Acceptable. The stairs are all piece-built delegated design. -ECN/CSO	CSO	6/16/25	Closed
Gibson-Lewis	General Requirements	Please confirm that the Owner is providing the Builder's Risk policy.	Correct	Pepper	6/16/25	Closed
Gibson-Lewis	General Requirements	Who is responsible for the builder's risk policy deductible? If the Prime Contractors are responsible for the builder's risk policy deductible, what is the deductible amount?	Prime subcontractors under Pepper would be responsible for the policy deductible.	Pepper	6/16/25	Closed
Gibson-Lewis	General Requirements	Many of the bid packages specifically exclude full-time, non-working safety professionals. Bid package 16-A – Interior & Exterior Framing, Gypsum, Blocking & Finishing does not include this exclusion. No requirement for a full-time safety professional is found in the front-end documents. Please confirm that a full-time, non-working safety professional is NOT required for BP 16-A.	Full-time, non-working safety professional is NOT required for BP-16A. Scope will be updated in addendum 2	Pepper	6/16/25	Closed
Gibson-Lewis	General Requirements	Please confirm that the use of stilts for acoustical ceiling work is acceptable.	Stilts are acceptable as long as safety handbook requirements are followed.	Pepper	6/16/25	Closed
Gibson-Lewis	Ceilings	Reference BP 16B – Ceilings SOW, 1.3-B = "Upon completion of drywall hanging on each floor, lifts will be required to be removed from that floor…" Ceiling type CL7 in the Cafeteria is installed close to the deck (approximately 28' above finished floor). A similar condition exists in Vestibule V101, CL8 = 22'-9" above finished floor. Due to safety concerns, please confirm that lifts will be permitted when installing this acoustical feature and other acoustical assemblies above stilt reach.	Lift use will be permitted if coordinated with Pepper superintendent for conditions such as those outlined in this question.	Pepper	6/16/25	Closed
Gibson-Lewis	Firestopping	Please confirm that fire taping and top of wall finishing of the drywall will be able to be finished off a lift or will this work have to be completed before the bottom drywall is hung?	This should be achievable with proper coordination up front and once trades are on site installing.	Pepper	6/16/25	Closed
Gibson-Lewis	Access Panels	Can you please indicate how many access panels BP #16A & 16B should plan to have to install for the MEP contractors? Can you also indicate what size panels BP #16A & 16B should plan to have installed?		Pepper	6/16/25	
Gibson-Lewis	Joint Sealants	Can you please confirm what joint sealant scope BP #16A is responsible for, since it is also listed under that BP's exclusions list? It appears that BP #07 should be responsible for acoustical caulking at the top and bottom of walls, as well as MEP penetrations, so that it is all a single source.		Pepper	6/16/25	
Gibson-Lewis	General Requirements	There appears to be not enough duration in the schedule activities for the walls and ceilings. Therefore, can some of the float be used as well as overlapping activities to help provide more time for the work to be completed?	Schedule will be firmed up with successful subcontractors via pull plan meetings. In general, please work to adhere to current schedule durations, adjusting manpower accordingly.	Pepper	6/16/25	Closed
Gibson-Lewis	Suspended Wood Ceilings	Is the perimeter trim for the wood ceiling in spec section 095426 (Suspended Wood Ceiling) a 4" Axiom Trim or a 4" wood veneered trim? Is the perimeter trim black to match the grid?	Trim to be 4" wood veneer to match standard offering from Armstrong Woodworks, color to be Constants Redux Wood Wheat. RNR/CSO	CSO	6/16/25	Closed
Gibson-Lewis	Suspended Wood Ceilings	What type of veneer cut should be used for CL5 (Spec Section 095426 – Suspended Wood Ceilings)? I don't see one specified.	Wood veneer to match standard offering from Armstrong Woodworks, color to be Constants Redux Wood Wheat; see Reflected Ceiling Legend. RNR/CSO	CSO	6/16/25	Closed
Lee Company	Basketball Equipment Operation	116623 Specs call for manual height adjusters (2.03.D.4). Note 12 on Sheet E211D states to provide NEMA receptacles for hoist & height adjuster motors. Are the height adjusters manual or electric? Sheet E611D only provides slots for east and west goals in Panelboard 1DSL1 and does not clarify. 2.03.F.5a-c each reference key switch operation. 2.03.F.5.e references wireless radio control operation. Which is correct?	Height adjustment to be manual. Delete reference to wireless radio control operation - key switch operation only. -ECN/CSO	CSO	2025-06-16	Closed
Gibson-Lewis	Acoustical Ceilings	The RCP Legend is calling for CL8 to be white (WH) and Custom to match SW7547. Can you please confirm what color should be used for this grid and tile?	Standard white grid for white ACT and custom color grid to match SW7547 ACT. RNR/CSO	CSO	6/16/25	Closed
Gibson-Lewis	Ceilings	Room #B132A (Grade Level Storage) is noted as an exposed ceiling as well as the adjacent room next it, but they both have a 2x2 grid shown. Do these rooms have an ACT grid, or are they exposed?	Room B132A Should have an exposed ceiling. The current ceiling grid shown is for the stair above. This will be hidden in addendum 2 for clarity. - LNM/CSO	CSO	6/16/25	Closed
Gibson-Lewis	Ceilings	On drawing A212A, there is a room above room A202 that looks like it has a CL8 ceiling but has no ceiling tag. Can you confirm that this room is to receive a CL8 ceiling?	Correct. This ceiling is for Vest. V101, which is shown on A211D. - LNM/CSO	CSO	6/16/25	Closed
Gibson-Lewis	Break Metal Closures @ Windows	Spec section 095113-2.05-G is calling for break metal closures at the window heads, but I currently only see details for drywall returns. Where is this detail located, and what type/color of break metal should be used?	The brake metal closures occur at the clerestories in the gym and cafeteria. See section 4/A406 for more information. - LNM/CSO	CSO	6/16/25	Closed
Gibson-Lewis	High-Traffic Area Designations	For high-abuse locations, this list corridor walls and high traffic areas. Please confirm what is considered a high-traffic area	High-traffic areas are considered any public area (corridor, cafeteria, media center, etc.) that does not have wall tile. Individual offices, classrooms, storage rooms, and restrooms are excluded. -ECN/CSO	CSO	6/16/25	Closed
Gibson-Lewis	Drywall Finishing	Please confirm drying-type compound is acceptable for finishing hi-abuse resistant gypsum board.	Acceptable for final layers per spec. -ECN/CSO	CSO	6/16/25	Closed
Gibson-Lewis	Insulation	Please confirm which bid package would have insulation above the ceilings.		Pepper	6/16/25	
Gibson-Lewis	Gypsum Board Assemblies	Please confirm it is acceptable to take all hi-abuse board to 10'.	Acceptable. -ECN/CSO	CSO	6/16/25	Closed
Gibson-Lewis	Insulation	Please confirm who will be responsible for the perimeter insulation listed for general note M on A010.		Pepper	6/16/25	
Uniquality Co.	Bid Bond	1.4 EXCLUSIONS A. The following items have been specifically excluded from this bid package: 1. Payment and performance bond. 2. Dumpsters 3. Firestopping 4. Parapet wood blocking , BP 06 Exhibit B 1.4 A , Does this mean that a 5% bid bond is not required to be submitted with our bid?	Bid bond is still required. Payment and performance bond is different.	Pepper	2025-06-16	Closed

PCI	Spray Foam Insulation	Spray foam is mentioned in multiple bid packages (BP07, BP12, BP16A). Please confirm which package is responsible for spray foam. After searching the drawings for any mention of spray foam insulation. It appears that there is no spray foam present in the drawings. Please confirm if there is any spray foam on this project.		Pepper	6/16/25	
PCI	Plywood Requirements in Mech./Elec./AV Rooms	Is plywood required on all walls of the mechanical/electrical/AV rooms?	Required in IDF. -ECN/CSO	CSO	6/16/25	Closed
PCI	Cyclorama Wall Finishes	Plan note #10 on the floor plans mentions a cyclorama room with upgraded wall finishes. Where is this located on the drawings?	Room number B122. -ECN/CSO	CSO	6/16/25	Closed
Pepper	Drawing A200	A010 General Note F references drawing A200. A200 was not issued. Please advise.	This note should refer to sheet A010. This will be addressed in addendum 2. - LNM/CSO	CSO	6/16/25	Closed
Pepper	SIKA Roof AVB	We recommend the application of a product similar to the SIKA vapor retarder on the roof when applied directly to the metal deck. The roof AVB helps control the interior air from infiltrating into the roof membrane where it can condense and cause moisture issues within the roof assembly. Moisture issues could include organic growth, decreased effectiveness of the roof insulation and shortened life of the roof assembly. Reference email from Ben Dykstra with SIKA product literature sent to CSO on 6/12/25.	Acceptable. -ECN/CSO	CSO	6/16/25	Closed
Pepper	Roof Substrate Board	The specifications call for a substrate board, however the drawings do not. Please advise.	There is no substrate board on the project. This will be eliminated from spec in ADD #02. -ECN/CSO	CSO	6/16/25	Closed
HFI	Ground Loop Vaults	M412 general note 1 mentions that the concrete valve vault manufacturer/loop contractor needs to provide the final dimensions of the vault. Could you please specify who is responsible for supplying the valve vaults?	Vaults are part of the geothermal system which is provided by BP #10 contractor	Pepper	6/17/25	Closed
HFI	Ground Loop Piping Materials	could you confirm if the ground loop water supply and return pipe inside the building can be Type L Press or weld piping? Additionally, can you confirm that the ground loop water supply and return pipe outside of the building is high-density polyethylene piping?	Per Spec Section 20 00 60 Pipe Schedule 1 Ground loop piping inside building may be Type L with cold press fittings for all pipe sizes. Schedule 40 steel with butt welded fittings is acceptable for piping 2-1/2" and greater. Ground loop piping outside of the building shall be HDPE per spec section 23 31 13.33 Paragraph 2.1	Pepper	6/17/25	Closed
HFI	Water Heater Tags	On P401, the water heaters are referred to as HW-A & B, while on P301 detail 2 ENLARGED MECHANICAL D179 - PLUMBING, they are named WH-A & B, as well as on the plumbing equipment schedule. Should we assume that these references are to the same set of water heaters and not different ones listed in the schedule?	Your assumption is correct. Those tags are referencing the same set of water heaters.	Pepper	6/17/25	Closed
HFI	Water Softener Salt Storage	on P301 detail 3 ENLARGED WATER RISER D182 – PLUMBING, near the duplex water softener system with brine tank, it states SALT STORAGE. Is it correct to assume that the plumbing contractor is responsible for providing salt storage for the water softener from installation until substantial completion?	Plumbing contractor (BP#9) to provide the salt required for softeners as indicated by spec section 22 31 00 paragraph 1.5.A.1 – Callout on P301 indicates area in mechanical room where salt will be stored.	Pepper	6/17/25	Closed
HFI	VFDs	Who is responsible for supplying the equipment VFDs? Should this task fall under the Electrical or HVAC scope?	VFDs furnished by Division 23 (BP#10) and wired by Division 26 (BP #11)	Pepper	6/17/25	Closed
FE Moran	Fire Suppression backflow preventer location	The site utility drawings show a meter pit with an FDC in a pit at the road, but does not mention a backflow preventer. The fire protection drawings not show a backflow in the building. Will the fire protection backflow preventer be required in the riser room or will it be in the pit?	This will be in the exterior pit. See City standard detail for vault on Sheet C801 that includes a double check detector assembly. See Columbus City Utility standards for acceptable make & model.	CEC	6/17/25	Closed
Gaylor	T102D - Junction Boxes	On drawing T102D for the junction boxes indicated by sheet note #1, can you answer the following: 1. What is the required NEMA rating? 2. Is the cover hinged or screwed? 3. Is the cover on the 5' wide side or the 1'-9" long side? 4. Are there any factory KOs?		CSO	6/17/25	
The Boots Group	Substitution Request - 09 51 33 American Decorative Ceilings Linear Z-Pan Ceiling	See substitution request sent to design team on 6/17/25.	There is not enough information to compare products. This is not an acceptable manufacturer. -ECN/CSO	CSO	6/17/25	Closed
The Boots Group	Substitution Request - 09 51 13 G&S Acoustics aCapella Chorus Baffles	See substitution request sent to design team on 6/17/25.	There does not appear to be a color line to match design intention. This is not an approved manufacturer. -ECN/CSO	CSO	6/17/25	Closed
Alfrex	Substitution Request - 07 42 43 Alfrex FR Metal Composite Wall Panels	See substitution request sent to design team on 6/17/25.	Approved and added in ADD 02. -ECN/CSO	CSO	6/17/25	Closed
Almet, Inc.	Structural Steel - Operable Wall Support	What size is the WF beam for the operable wall support shown on detail 9/A213?	W36x135 w/ C15x33.9 top channel per S203D	CSO	6/17/25	Closed
Pepper	Gypsum Board Assemblies	1. Typical wall type is 8" above ceilings. a. Corridors have an open ceiling concept. Should these walls go 8" above the classroom ceilings? b. @ the stair walls this show drywall only 8" above ceilings. Are the stairs to be rated? c. Detail 1/A010 shows the typical wall framing and hanging 8" above deck. Can you confirm this is the intent or provide other head of wall details.	Typical walls are to go to deck unless followed by the # modifier, as noted on page A010. If the wall is followed by the # modifier, then detail 1/A010 would apply. Walls around the classrooms should go to deck unless noted otherwise. The stairs are not required to be rated. -LNM/CSO	CSO	6/17/25	Closed
Rock Solid Masonry	Mitered Masonry Corners	Are there special shapes desired at masonry mitered outside corners? If so, please provide angles. If not, please confirm the expectation at these conditions.	Outside corners are to be bullnose where exposed finished wall receives paint. -ECN/CSO	CSO	6/17/25	Closed
Waukegan Steel	Non-Working Foreman	Under project specific Clarifications it calls for a non-working foreman in item 1.2, H We have seen this request before on other projects but usually on the larger ones Just want to make sure that this is a requirement on this project & not left over from a previous scope ?	This is a requirement for this project	Pepper	6/17/25	Closed
Waukegan Steel	Autodesk Construction Cloud	Under clarification item III it calls for us to have a paid subscription to Autodesk Construction Cloud We have used this in the past but typically as a subcontractor we did not have to pay for a subscription If this request is to be followed what cost are we to include as it is my understanding that there are several different subscription tiers? Also how long will we have to keep the subscription?	ACC will be used for project document distribution, RFI's, submittals, punch list, models, etc. so the ability to access all of those functions will be required. Through the duration of scope, including closeout.	Pepper	6/17/25	Closed
		Can you clarify further what steel scope items O & P are ?				
Gradex	Alternate #1 Clarifications	Regarding the Wooded Trail Alternative, please clarify whether the demolition and grading of the wooded trail should be included in the base bid, or if it should be considered as an alternative.	The pathway should be priced as an alternate complete (tree clearing, pathway itself, grading at pathways, etc.).	Pepper	2025-06-17	Closed
Gibson-Lewis	Installation of CL7 Soundscape Blades	Can we please get a detail for the installation of CL7 (Soundscape Blades)? The specs are calling for the blades to be directly attached to Unistrut, but that does not appear to be an option. Please see the three options below for the product data pages. Is the architect looking for them to be directly attached to a suspension system, and if so, do they want the grid to be all black?	The intent is for the blades to be suspended individually with a hanging kit. -ECN/CSO	CSO	2025-06-17	Closed
Gibson-Lewis	Taping & Sealing of Exterior Sheathing	Line item Y in BP #016A indicates that we are responsible for taping and sealing the exterior sheathing joints, but it appears that BP #07 has air barriers in their bid package. Can you please confirm that taping and sealing the sheathing joints and penetration will be covered by them, and no BP #16A, since this could cause warranty issues with their system?	Correct, taping and sealing of the exterior sheathing by BP-07.	Pepper	6/17/25	Closed
Breckenridge	Wage Rates/Requirements	What are the applicable wage rates/requirements for this Maple Grove project?	Indiana is a right to work state.	Pepper	2025-06-17	Closed
The Boots Group	Substitution Request - 09 84 33 Sound Absorbing Wall Units	See substitution request sent to design team on 6/17/25.	Approved and added in ADD 02. -ECN/CSO	CSO	6/17/25	Closed
Levensteins	BP-24 Scope Clarification - Backer Board	Will the hanging of backer board for wall tile be in tile scope or will that be in BP-16A interior finishing?	Cement backer board is by BP-16A.	Pepper	2025-06-17	Closed
Levensteins	BP-19 Scope Clarification - Sleeves and Sleeve Seals	26 05 44- Sleeves and Sleeve Seals for Electrical Raceways and Cabling in our Scope of work, is this to be removed?	Sleeves are furnished and installed by others, this is just meant to capture any finishing/detailing around the sleeves from a flooring perspective.	Pepper	2025-06-17	Closed
Milestone	Bollards Scope Clarification	Steel Pipe Bollards – Are they included in the furnishing package?	Steel bollards are supplied by BP-04, installed by BP-02A.	Pepper	2025-06-17	Closed
Corflex	Substitution Request - Operable Partitions	Emailed directly to CSO on 6/17/25	Approved and added in ADD 02. -ECN/CSO	CSO	2025-06-17	Closed
Carlisle	Substitution Request - PVC Roofing	Emailed directly to CSO on 6/13/25	Does not appear to meet specification written based on district standard provided by Owner. -ECN/CSO	CSO	2025-06-13	Closed
Lee Company	Signage Locations	Please confirm signage needs	Owner is providing and installing wayfinding/room signage. See 24/A650 for an example of signage included in the construction scope of work (17B)	Pepper	2025-06-17	Closed
FAW	Oak Security Contact	Please provide contact for Oak Security for temporary core system	Kevan Duke kduke@oaksecurity.com	Pepper	2025-06-17	Closed
Blakley's	L2 Corridor Flooring Confirmation	There is a small section of corridor outside of B221 that does not appear to have a flooring designation. Since it's a corridor, should this be LVT-1?	Correct, flooring to be LVT1. This will be addressed in addendum 2. RNR/CSO	CSO	2025-06-17	Closed
HFI	BP-09 - floor drains, cleanouts, hose bibbs, wall hydrants	Could you please provide a complete schedule of all the drains, cleanouts, hose bibs, and wall hydrants? Typically, suppliers require these items to be listed on a plumbing fixture schedule to proceed, as they do not usually refer to the specifications alone.	We do not typically provide a schedule with all of these items listed. This information can be compiled from the drawings and specifications.	REDimond	2025-06-17	Closed
Milestone	Curb Details	1. On detail 7 on sheet L600, can the curb portion be slipped first and then the sidewalk portion be hand poured behind it? 2. On detail 8 on sheet L600, can the 24"x6" concrete post curb be poured with a battered face? It would be 6" wide at the top and 9" wide at the bottom.		CSO	2025-06-17	Open
Reed and Sons	Casting Manufacturer	The plans show all Neenah castings; C400, but CCU specs state East Jordan. Can you confirm whether both, Neenah Foundry or East Jordan are acceptable?		CSO	2025-06-17	Open

RFI LOG

Reed and Sons	PVC Drain Basins	PVC Drain Basins listed on C400 do not specify grate types on majority of the basins. They also don't specify whether they are to be inline or actual basins. Can you please confirm?		CSO	2025-06-17	Open
Reed and Sons	Cleanouts	Type '1' Cleanouts state "Std. Cleanout Cover" on C802, but do not illustrate an actual casting like Type '2" Cleanouts. Is a PVC hub and plug all that is required?		CSO	2025-06-17	Open
Waukegan Steel	05 12 00 Record Surveys	Will we be required to also provide an anchor bolt survey?		CSO	6/17/25	
SPS Corporation	Glass Types	In 088000, 2.14, A, 1. Vitro Solarban 70 on Solargray is listed as the BOD for G1; however, 088000, 2.14, B, 1. Vitro Solarban 70 on Optigray is listed as the BOD for G4. While these are two different glass types, they do sit adjacent to each other in some of the exterior aluminum framing. Are these glass types correct as is, or should they match? The glass characteristics listed in 2.14, A, 8-11 seem to match closer to Solarban 70 on Solargray. If G1 and G4 are supposed to match, should they use the Solargray option?		CSO	2025-06-17	Open
GP Steel	Operable Partition Support Beam	What is the beam size required to carry the operable partition wall in the Gym, Unit D? Drawing S203D: D4 Line between DH & DN indicates "something" + a C15x33.9 channel. Drawing 9/A213 shows a Wide Flange Beam here with a channel on the top.		LHB	2025-6-18	Open
FAW	Roller Shade and Access Ladder Scope Clarification	Roller Shades are in the specialty equipment schedule but I can't find them called out in a specific bid package. Which bid package are the Roller Shades in? The Access Ladder is also on this schedule and it looks like it falls under BP-04, is that correct?	Roller shades are in BP-23 Window Treatments. Access ladder for roof hatch is in BP-04 Steel.	Pepper	2025-6-18	Closed
Lafayette Materials Management Co.	Operable Partition - Kwik Wall	Kwik-Wall is listed as an approved vender but there are two specs that do not align with their product line. 1 The specification for a steel track – Kwik-Wall has a very robust aluminum track design specifically for the electric wall 2 The specification for automatic bottom seals – Kwik-Wall offers an adjustable bottom seal that is set at install and does not need to operate. Please let me know if the owner would accept these variances before I submit a bid.		CSO	6/18/25	
Pepper	Constructability Review	Reference Details 15/A420, 9 & 11/A421 (and similar) Enlarged Section Detail	BP-07 to install an air dam to reduce interior air infiltration into the parapet. The air dam to be a slab edge firesafing (mineral wool and spray).	Pepper	6/18/25	
Pepper	Constructability Review	Reference Detail 8/A420 (sim.)	BP-06 to install roof AVB up and over precast and onto tube steel.	Pepper	6/18/25	
Pepper	Addendum #2 - Detail 13/A420	Who is responsible to install the stainless steel cap flashing shown on detail 13/A420	By BP-06 Roofing & Flashing	Pepper	6/18/25	
Pepper	Constructability Review	Reference Detail 5/A420 - 08 44 13-D	Flashing by BP-05 to be 0.050 or thicker	Pepper	6/18/25	
Pepper	Constructability Review	Reference details 5 & 6/A430 and similar.	BP-05 to add 3rd line of sealant from curtainwall perimeter pressure plate to the brake metal flashing.	Pepper	6/18/25	
Pepper	Constructability Review	Reference details 2 & 3/A430 and similar	BP-07 to install AVB transition membrane at the jamb conditions and review options to seal transition membrane to the precast and brake metal shown.	Pepper	6/18/25	
Pepper	Spray Foam Clarification	100% CD's included a spray foam specification but it's not clear where spray foam is intended to be installed. Specification calls out plenum spaces but not seeing in the drawings. Please confirm if and where spray foam is needed.		CSO	2025-06-18	Open

Bartholomew Consolidated School Corporation
New Elementary School #12 - Maple Grove

PROJECT BID MANUAL

revised 6/18/2025

Owner
Bartholomew Consolidated School Corporation

Architect
CSO and Höweler + Yoon Architecture, LLP

Construction Manager
Pepper Construction

Pepper Construction
Tomorrow Transformed

1850 W 15th Street, Indianapolis, IN 46202
317.681.1000 (Main) | 317.684.9694 (Fax)

TABLE OF CONTENTS

1) Invitation to Bid
2) Notice to Bidders
3) Contractor's Bid for Public Work Form 96
4) Bid Package Descriptions/Scopes of Work
5) Project Schedule
6) Logistics Plan
7) Sample Subcontract Agreement
8) Insurance Requirements
9) Sample Certificate of Liability Insurance
10) Pepper Prequalification Instructions
11) Trade Partner Safety Handbook
12) Pepper Quality Program Requirements
13) BIM Trade Coordination Protocol
14) Idle Emissions Reduction Plan

1850 W 15th Street, Indianapolis, IN 46202
317.681.1000 (Main) | 317.684.9694 (Fax)

INVITATION TO BID

June 6, 2025

PROJECT DESCRIPTION: Pepper Construction has been selected as the Construction Manager for the Bartholomew Consolidated School Corporation (BCSC) - New Elementary School #12 - Maple Grove project located at Tipton Lake Blvd, Columbus, IN 47201. This project consists of a new ground-up, 2-story 100,000 GSF elementary school located on a 7-acre site. The building consists of cast-in-place concrete, architectural precast panels, structural steel, metal panels, PVC membrane roof and storefront/curtainwall. The school includes a cafeteria area, gymnasium, and office space for staff and each wing of the school consists of an activity commons area with classrooms, restrooms, and small group areas. The school will have a new geothermal HVAC system located on the north side of the site. The site consists of new playground areas with playground surfacing, barrier and metal gates, asphalt paving, concrete paving and curbs and landscaping.

Construction is anticipated to begin September 2025 and end April 2027

Please refer to the Project Bid Manual (this document) for the most up to date bid packages & bid due dates.

Pepper Construction requests competitive bids for the following BID DAY #1 packages (bid day 6/24/25):

- BP-02B: Masonry
- BP-03: Precast
- BP-04: Structural & Misc. Steel
- BP-05: Glass/Glazing and Metal Panels
- BP-06: Roofing & Flashing
- BP-07: Joint Sealants, Firestopping, Dampproofing & Waterproofing, and Air Barriers
- BP-08: Elevator
- BP-11: Electrical/Low Voltage/Security/Fire Alarm/HVAC and Door Rough-ins/Pathways
- BP-12: Fire Suppression
- BP-16A: Interior & Exterior Framing, Sheathing, Gypsum, Blocking, and Finishing
- BP-16B: Ceilings

Pepper Construction requests competitive bids for the following BID DAY #2 packages (bid day 6/26/25):

- BP-01: Earthwork & Site Utilities
- BP-02A: Building and Site Concrete
- BP-09: Plumbing
- BP-10: HVAC and Geothermal
- BP-13: Landscape and Site Furnishings
- BP-14: Playground Surfacing and Equipment
- BP-15: Bid package removed
- BP-17A: General Trades A (D/F/H supply & install)
- BP-17B: General Trades B (Accessories, Gym Equipment, Wall Protection)
- BP-18: Gym Flooring
- BP-19: Flooring
- BP-20: Painting, Wall Coverings, and Sealed Concrete
- BP-21: Millwork
- BP-22: Asphalt Paving
- BP-23: Window Treatments
- BP-24: Tiling
- BP-25: Operable Partitions
- BP-26: Bid package removed
- BP-27: Food Service Equipment

The successful bidder for each bid package will enter into a Subcontract Agreement with Pepper Construction.

PREQUALIFICATION: Trade partners **must be prequalified** with Pepper Construction prior to award. Online Pepper Prequalification instructions are included in this project bid manual and can be found on our website here - https://www.pepperconstruction.com/prequalification Reach out to Caitlin Poe – cpoe@pepperconstruction.com with questions regarding Pepper's online prequalification.

PRE-BID MEETING: A pre-bid meeting will be held for all prospective bidders on **Wednesday, June 11, 2025, 10:00 AM ET** at **Bartholomew Consolidated School Corporation (BCSC) Administrative Building, 1200 Central Ave, Columbus, IN 47201**. Pre-bid meeting attendance is not mandatory but is **highly encouraged** for all trade partners.

BIDS DUE for BID DAY #1: Sealed, hand-delivered bids are due no later than **Tuesday, June 24, 2025, 2:00 PM ET** at **Bartholomew Consolidated School Corporation (BCSC) Administrative Building, 1200 Central Ave, Columbus, IN 47201**. All bids must be in a sealed envelope labeled clearly with the **project name**, **your company name**, and **bid package name & number.** If you're submitting a bid for more than one bid package, each bid must be submitted separately in its own envelope and include the bid form, allowance form, alternates form, unit prices form, SOV, Form 96, and a copy of your 5% bid bond.

Combination Bids: Please turn in a Bid Form for each bid package as a stand-alone bid. If you plan to provide a discount for combining more than one bid package, please indicate that on the bid form.

BIDS DUE for BID DAY #2: Sealed, hand-delivered bids are due no later than **Thursday, June 26, 2025, 2:00 PM ET** at **Bartholomew Consolidated School Corporation (BCSC) Administrative Building, 1200 Central Ave, Columbus, IN 47201**. All bids must be in a sealed envelope labeled clearly with the **project name**, **your company name**, and **bid package name & number.** If you're submitting a bid for more than one bid package, each bid must be submitted separately in its own envelope and include the bid form, allowance form, alternates form, unit prices form, SOV, Form 96, and a copy of your 5% bid bond.

Combination Bids: Please turn in a Bid Form for each bid package as a stand-alone bid. If you plan to provide a discount for combining more than one bid package, please indicate that on the bid form.

Bids received after 2:00 PM will not be opened. Please ensure that you have included all required forms (bid form, allowance form, alternates form, unit prices form, SOV, Contractor's Bid for Public Work Form 96) and your 5% bid bond. The owner reserves the right to reject bids, and to waive informalities, irregularities, and errors in the bidding process to the extent permitted by law. This includes the right to amend the date and time for receipt of bids.

PLAN ROOM: Bid documents are available for electronic download - https://pepperconstruction.egnyte.com/fl/pxglBMyzUE **PASSWORD:** ie87SmhB9k2Z

QUESTIONS/RFIs: Please direct all questions/RFIs via email to Andrew VanderVinne - avandervinne@pepperconstruction.com no later than **Monday, June 16, 2025, 2:00 PM ET**

BID SECURITY: Bidders are required to include **5% bid security** or a **bid bond**. Please see Vol. 1 of the specifications for additional details.

PERFORMANCE/PAYMENT BOND: **No** performance/payment bond is required.

PUBLIC BID OPENING for BID DAY #1: A public bid opening will take place at **Bartholomew Consolidated School Corporation (BCSC) Administrative Building, 1200 Central Ave, Columbus, IN 47201** on **Tuesday, June 24, 2025, 2:00 PM ET**. Bids will be opened and publicly read aloud. All interested parties are invited to attend. Bids received after 2:00 PM will **not** be accepted.

PUBLIC BID OPENING for BID DAY #2: A public bid opening will take place at **Bartholomew Consolidated School Corporation (BCSC) Administrative Building, 1200 Central Ave, Columbus, IN 47201** on **Thursday, June 26, 2025, 2:00 PM ET**. Bids will be opened and publicly read aloud. All interested parties are invited to attend. Bids received after 2:00 PM will **not** be accepted.

NOTICE TO BIDDERS

PROJECT: **BCSC - New Elementary School #12 - Maple Grove**
Tipton Lakes Blvd.
Columbus, IN 47201

OWNER: **Bartholomew Consolidated School Corporation (BCSC)**
1200 Central Avenue
Columbus, IN 47201

ARCHITECT: **CSO Architects**
8831 Keystone Crossing
Indianapolis, IN 46240

Höweler + Yoon Architecture
150 Lincoln Street
Boston, MA 02111

CONSTRUCTION MANAGER: **Pepper Construction**
1850 W 15th Street
Indianapolis, IN 46202
317.681.1000

RE:

Notice is hereby given, that proposals will be received on behalf of Bartholomew Consolidated School Corporation:

BY: Pepper Construction
1850 W 15th Street
Indianapolis, IN 46202

FOR: **Bartholomew Consolidated School Corporation (BCSC) - New Elementary School #12 Maple Grove**

AT: Bartholomew Consolidated School Corporation
1200 Central Ave
Columbus, IN 47201
Sealed, Hand-delivered or Mailed Bids

Until: BID DAY #1 - Tuesday, June 24, 2025, 2:00 PM ET
BID DAY #2 - Thursday, June 26, 2025, 2:00 PM ET

Bid documents consist of the following: Drawings Vol. 1 & Vol. 2 dated 5/30/2025, Specifications Vol. 1 - Vol. 3 dated 5/30/2025 and Project Bid Manual dated 6/5/2025. Additional information provided during the bid period via addenda will be incorporated into the "bid documents" and shall be acknowledged on the bid form.

Bid documents are available for electronic download:
https://pepperconstruction.egnyte.com/fl/pxglBMyzUE **PASSWORD:** ie87SmhB9k2Z

Bidders must submit their bid on the bid form provided in the bid documents and must include all required bid forms including Form 96 and 5% Bid Bond with their bids.

By submission of bid, bidders acknowledge that they have carefully reviewed all the bid documents and have a complete scope of work. Bidders are to include all items described in the bid package descriptions, specifications, and plans without exclusion or exceptions.

Bidders who are not already prequalified must prequalify prior to the bid due date. Pepper Construction prequalification information is provided in the bid documents.

Prior to award, prime bidders shall submit a list of all vendors, suppliers, and subcontractors that the prime bidder intends to use on this project. Pepper Construction reserves the right to reject the prime bidder's vendors, suppliers, and/or subcontractors, and an acceptable substitute shall be provided. Pepper Construction will review potential impacts to the bids with the bidder prior to final approval.

The Owner reserves the right to accept or reject any bid and to waive any irregularities in bidding. The Base Bid may be held for a period not-to-exceed sixty **(60)** days before awarding Contracts. All Alternate Bids may be held for a period not-to-exceed sixty **(60)** days after signing Notice to Proceed.

END OF NOTICE TO BIDDERS

CONTRACTOR'S BID FOR PUBLIC WORK - FORM 96

State Form 52414 (R2 / 2-13) / Form 96 (Revised 2013)
Prescribed by State Board of Accounts

PART I
(To be completed for all bids. Please type or print)

Date *(month, day, year):*_____

1. Governmental Unit (Owner):_____
2. County :_____
3. Bidder (Firm):_____

   Address:_____

   City/State/ZIPcode:_____
4. Telephone Number:_____
5. Agent of Bidder *(if applicable):*_____

Pursuant to notices given, the undersigned offers to furnish labor and/or material necessary to complete the public works project of _____ (Governmental Unit) in accordance with plans and specifications prepared by _____ _____ and dated _____ for the sum of _____ $_____

The undersigned further agrees to furnish a bond or certified check with this bid for an amount specified in the notice of the letting. If alternative bids apply, the undersigned submits a proposal for each in accordance with the notice. Any addendums attached will be specifically referenced at the applicable page.

If additional units of material included in the contract are needed, the cost of units must be the same as that shown in the original contract if accepted by the governmental unit. If the bid is to be awarded on a unit basis, the itemization of the units shall be shown on a separate attachment.

The contractor and his subcontractors, if any, shall not discriminate against or intimidate any employee, or applicant for employment, to be employed in the performance of this contract, with respect to any matter directly or indirectly related to employment because of race, religion, color, sex, national origin or ancestry. Breach of this covenant may be regarded as a material breach of the contract.

CERTIFICATION OF USE OF UNITED STATES STEEL PRODUCTS
(If applicable)

I, the undersigned bidder or agent as a contractor on a public works project, understand my statutory obligation to use steel products made in the United States (I.C. 5-16-8-2). I hereby certify that I and all subcontractors employed by me for this project will use U.S. steel products on this project if awarded. I understand that violations hereunder may result in forfeiture of contractual payments.

ACCEPTANCE

The above bid is accepted this _____ day of _____, _____, subject to the following conditions: _____

_____

Contracting Authority Members:

_____ _____

_____ _____

_____ _____

PART II

(For projects of $150,000 or more – IC 36-1-12-4)

Governmental Unit: _____

Bidder (Firm) _____

Date *(month, day, year):* _____

These statements to be submitted under oath by each bidder with and as a part of his bid. Attach additional pages for each section as needed.

SECTION I EXPERIENCE QUESTIONNAIRE

1. What public works projects has your organization completed for the period of one (1) year prior to the date of the current bid?

Contract Amount	Class of Work	Completion Date	Name and Address of Owner

2. What public works projects are now in process of construction by your organization?

Contract Amount	Class of Work	Expected Completion Date	Name and Address of Owner

3. Have you ever failed to complete any work awarded to you? _____ If so, where and why?

_____

_____

_____

4. List references from private firms for which you have performed work.

_____

_____

_____

_____

_____

SECTION II PLAN AND EQUIPMENT QUESTIONNAIRE

1. Explain your plan or layout for performing proposed work. *(Examples could include a narrative of when you could begin work, complete the project, number of workers, etc. and any other information which you believe would enable the governmental unit to consider your bid.)*

_____

_____

_____

_____

_____

2. Please list the names and addresses of all subcontractors *(i.e. persons or firms outside your own firm who have performed part of the work)* that you have used on public works projects during the past five (5) years along with a brief description of the work done by each subcontractor.

_____

_____

_____

_____

_____

3. If you intend to sublet any portion of the work, state the name and address of each subcontractor, equipment to be used by the subcontractor, and whether you will require a bond. However, if you are unable to currently provide a listing, please understand a listing must be provided prior to contract approval. Until the completion of the proposed project, you are under a continuing obligation to immediately notify the governmental unit in the event that you subsequently determine that you will use a subcontractor on the proposed project.

_____

_____

_____

_____

_____

4. What equipment do you have available to use for the proposed project? Any equipment to be used by subcontractors may also be required to be listed by the governmental unit.

_____

_____

_____

_____

_____

5. Have you entered into contracts or received offers for all materials which substantiate the prices used in preparing your proposal? If not, please explain the rationale used which would corroborate the prices listed.

_____

_____

_____

_____

_____

SECTION III CONTRACTOR'S FINANCIAL STATEMENT

Attachment of bidder's financial statement is mandatory. Any bid submitted without said financial statement as required by statute shall thereby be rendered invalid. The financial statement provided hereunder to the governing body awarding the contract must be specific enough in detail so that said governing body can make a proper determination of the bidder's capability for completing the project if awarded.

SECTION IV CONTRACTOR'S NON – COLLUSION AFFIDAVIT

The undersigned bidder or agent, being duly sworn on oath, says that he has not, nor has any other member, representative, or agent of the firm, company, corporation or partnership represented by him, entered into any combination, collusion or agreement with any person relative to the price to be bid by anyone at such letting nor to prevent any person from bidding nor to include anyone to refrain from bidding, and that this bid is made without reference to any other bid and without any agreement, understanding or combination with any other person in reference to such bidding.

He further says that no person or persons, firms, or corporation has, have or will receive directly or indirectly, any rebate, fee, gift, commission or thing of value on account of such sale.

SECTION V OATH AND AFFIRMATION

I HEREBY AFFIRM UNDER THE PENALTIES FOR PERJURY THAT THE FACTS AND INFORMATION CONTAINED IN THE FOREGOING BID FOR PUBLIC WORKS ARE TRUE AND CORRECT.

Dated at _____ this _____ day of _____, _____

_____
(Name of Organization)

By_____

_____
(Title of Person Signing)

ACKNOWLEDGEMENT

STATE OF _____)
) ss
COUNTY OF_____)

Before me, a Notary Public, personally appeared the above-named _____ and

swore that the statements contained in the foregoing document are true and correct.

Subscribed and sworn to before me this _____ day of _____, _____.

_____
Notary Public

My Commission Expires:_____

County of Residence:_____

Part of State Form 52414 (R2 / 2-13) / Form 96 (Revised 2013)

BID OF

_____
(Contractor)

_____
(Address)

_____

FOR

PUBLIC WORKS PROJECTS

OF

_____

_____

_____

Filed _____, _____

Action taken _____

_____

BID PACKAGE DESCRIPTIONS

Pepper Construction
Tomorrow Transformed

1.2 PROJECT SPECIFIC CLARIFICATIONS

A. Each subcontractor will have 10 business days after receiving the subcontract to review, sign off, and return to Pepper. Failure to complete this process in the allotted time frame will result in the termination of this subcontract. At that time Pepper will begin interviewing the next low bidder for this bid package.

B. All substitution requests must follow formal procedures in spec section 00 26 00. No deviation from this section will be accepted.

C. Each subcontractor has the responsibility to immediately examine the contract documents for errors, inconsistencies, or omissions. Any such errors, inconsistencies or omissions shall immediately be brought to the attention of Pepper Construction Company.

D. Subcontractor pricing is to include all work that is inferable from the drawings and specifications. All questions shall be submitted prior to bid day. Submission of bid is considered formal acceptance and no future change order will be issued for any gaps.

E. Due to owner bid package review and approval timeline, all bids must be valid through August 22nd, 2025 to allow time for contracts to be sent out.

F. The Subcontractor is to include all labor, material, tools, equipment, supervision necessary to complete fully this scope of work for the BCSC - New Elementary School #12 project.

G. Subcontractor is required to attend and participate in site specific safety orientation, daily field huddle meetings, weekly subcontractor coordination meetings, preinstall meeting, building enclosure coordination (as applicable), and three pull plan scheduling meetings.

H. Contractor shall provide a non-working foreman for all work being performed for this scope of work.

I. The Schedule of Values submitted as part of this bid must break out all allowances as separate line items.

J. Alternates if accepted would be added or deducted from the subcontract at a later date.

K. All pay application requests must include an updated change order log (standard form will be provided by Pepper Construction). Failure to record all costs on the change order log at time of submission by subcontractor will be accepted as formal notification to Pepper Construction, Owner, and Design Team all items have been accounted. No backdated tickets or change orders will be accepted.

L. All pay application requests must include updated as-builts for applicable trades.

M. Provide and deliver to site required spare parts for owner's attic stock. Ensure all items are counted and a transmittal is provided with each delivery. Coordinate with Pepper. Final payment will not be provided until all items are turned over.

N. The project is sales tax exempt. All subcontractors should exclude sales tax in their base bid and from any future change orders. Sales tax exemption information can be found in 00 72 16 Tax Exemption Certificate.

O. Labor rate escalation is included with subcontractor's base bid for the duration of the project as determined by the project schedule. The subcontractor must provide current labor rates at bid time that do not include any mark up or overhead. For duration of project updated labor rates for any additional or deduction of work must be provided to Pepper to keep on file.

P. All change orders must be presented utilizing the provided form (00 72 18 Change Order Request). All change orders presented that do not utilize this form will be rejected and sent back to the subcontractor to correct.

Q. All costs (addition or deduction) related to ASIs or RFIs must be formally submitted within 10 business days of formal notification to subcontractors sent out by Pepper Construction. Failure to submit associated costs within this time frame will be considered legal confirmation that there are no cost impact to the subcontractor.

R. Subcontractor is required to submit detailed updated 6-week lookahead schedules weekly starting 6-weeks from first on site date through the duration of subcontractor's scope.

S. Site hours of operation will be 7:00am to 5:00pm, Monday through Friday. Subcontractors required to work weekends to maintain project schedule or formally requested to perform work on the weekends or off hours will be handled on an individual basis.

T. Subcontract includes daylight work hours and 2nd shift as required to maintain project schedule. Each subcontractor will provide resources to properly fulfill their schedule requirements. Any premium time needed to maintain their commitment will be at the subcontractor's expense.

U. Include multiple mobilizations and demobilizations to the jobsite as required to meet the provided project schedule included in the bid package.

V. The subcontractor will follow the project schedule timeline for execution of submittals. Failure to complete submittals per the project schedule will be grounds for withholding all payments.

W. Subcontractor to review and confirm with vendors and manufacturers during supply of submittals that no products being submitted on are being discontinued within the next year. Additionally, subcontractor to confirm and provide on submittal current lead times.

X. Subcontractors shall provide all required insurance including General Liability (GL).

Y. Cyber and pollution insurance per project documents must be provided by the subcontractor with no exceptions taken. No waivers will be accepted.

Z. The subcontractor acknowledges the Site Logistics plan included in bidding documents and will utilize this plan as a reference for what is intended and expected from Pepper Construction. The subcontractor is given authority to make minor adjustments, with prior approval from Pepper superintendent to the site logistics plan where means of efficiency for the project can be achieved. Subcontractor acknowledges that if the plan is adjusted, and the result of the adjustment increases the scope of work for either Pepper or any other subcontractor onsite, subcontractor is subject to a back charge as may be required.

AA. All lifts shall maintain a diaper for duration of being onsite and be free of any fasteners in tires. Wheels shall be non-marking.

BB. Upon completion of drywall hanging on each floor lifts will be required to be removed from that floor for the duration of the project. From that point moving forward for remainder of project subcontractors must only utilize ladders and scaffold systems.

CC. Include any task specific temporary lighting required for this scope of work based on schedule and jobsite hours.

DD. Subcontractor includes all traffic control as necessary pertaining to subcontractors' scope of work.

EE. The subcontractor is required to complete all layout and engineering as required to complete the scope. Layouts to be conducted by use of total station or equivalent system. Pepper to provide control points inside the building one location per each wing at each level. These points will be set once steel columns are locked in, and decking has been installed. For site work including but not limited to site grading and setting of building foundations project documents provide existing benchmarks that subcontractor(s) shall confirm acceptance of and then utilize. Failure to follow through with use of these points will result in any rework or amendments being covered by associated subcontractor.

FF. Concrete washouts are to be provided and maintained by each subcontractor performing work that requires one of these units. Failure to maintain the unit, leaks from unit, or damage will be the subcontractor's sole responsibility to correct. Failure to complete within 24 hours will result in formal acceptance of Pepper correcting the issue and all cost associated with corrective actions will be sent as a formal back charge to the subcontractor. (Placement of washouts must be approved by Pepper site superintendent.)

GG. Be present for all loading and unload, including equipment, dunnage, and labor, off-load all materials associated with this scope of work. Gates must be closed and re-secure after each vehicle entering and leaving the site. Failure to adhere to this requirement may result in back charges at Pepper's discretion.

HH. The subcontractor is responsible for reviewing delivery logistics and sizing of trucks for deliveries. Deliveries that occur outside of project designated hours unless coordinated ahead of time will be refused until project is next open.

II. Limited laydown space will be available on site, however material not being used in a reasonable timeframe, as determined by Pepper superintendent, may not be stored on site. Laydown and deliveries must be coordinated with Pepper superintendent. Delivery board will be posted in Pepper trailer to coordinate and provide consistent clarification.

JJ. Parking and laydown locations will be adjusted based on phase of sitework and utility install. Pepper will provide reasonable notice to shifting of parking and laydown; subcontractor has included necessary means to adjust accordingly.

KK. Project parking will be on site in designated areas.

LL. No laydown, parking, or driving over geothermal well fields and other utilities until proper coverage has been installed.

MM. All subcontractor employees and tiered subcontractors performing work onsite will be required to go through a site-specific safety orientation prior to gaining access to the site. This orientation will be held 5 days a week Monday through Friday through the duration of the project. Orientation will begin at 7:30am and last no longer than 1 hour. Individuals will only be required to complete orientation once during the duration of the project. At the completion of the training and background check individuals will receive a numbered site-specific decal that must be worn on their hard hat.

NN. All employees working on the project site must complete a background check per BCSC Code D325. Full code is available online at:

https://go.boarddocs.com/in/bcsc/Board.nsf/goto?open&id=DAXHKL48E344

OO. All personnel must bring a scannable ID to orientation and pass the "Safe Visitor" background check.

PP. Tobacco (smoking and or vape and chewing tobacco) are not permitted on the Property. Subcontractor employees caught in violation will be removed from the site immediately for the day on the first offence and on the second offence removed from the project permanently for the remainder of the project.

QQ. The subcontractor has reviewed and agrees to safety requirements in the safety handbook and upon signing off the subcontract are required to submit a project specific safety plan within 15 business days of signed contract.

RR. Preinstallation Safety Meeting: Pepper will lead a safety preinstallation meeting with each subcontractor prior to starting work. The subcontractor's project manager and on site foreman/superintendent along with necessary tiered subcontractors are required to attend and participate in this meeting. Safety preinstallation meetings last approximately an hour or less depending on the scope of work.

SS. All operators must be certified. Provide all certifications for on-site operators prior to individual arriving on site.

TT. Subcontractor to provide all dust control measures (i.e., excavation activities, demo, drywall finishing, drilling, etc.) related to this Scope of Work.

UU. Each subcontractor is responsible for portable units (trash cans, tippy dumpsters, etc.) for waste and transporting of these items to project provided trash and recycle dumpsters. (Pepper policy is nothing hits the floor)

VV. The subcontractor is required to locate all utilities, public and private, prior to excavation. Subcontractor to reference Subcontractor Safety Handbook for specific requirements pertaining to Underground Utilities. (Excavation Permit, UUDP Handoff Meeting)

WW. The subcontractor has reviewed all quality requirements, signed off on the quality agreement, and submitted a project specific quality plan. All these items must be submitted and approved prior to approval of the first pay application.

XX. All quality items must be completed or responded to within 5 business days. (Must have photo documentation of repair/issue) Failure to complete this process in the designated time frame will result in any current payments being withheld until completed.

YY. Care will be taken by each subcontractor to provide exemplary workmanship. Work that is sloppy, and work that is not installed in a neat, workmanlike manner, will be rejected by Pepper, and will be re-worked at the subcontractor's expense.

ZZ. Building Enclosure Coordination Meeting: Pepper Construction leads the building enclosure coordination meeting in an effort compile the expertise of all parties with the goal of reducing field conflicts and warranty claims due to material compatibility, incomplete details, and construction sequencing. This meeting lasts approximately 2 days 16 hours (including lunch) and the Architect is invited to attend. Trade Partners required to attend this meeting include trades with the following scopes of work: CFMF & exterior sheathing, air-vapor barrier, waterproofing, exterior insulation, roofing, curtainwall & windows, and all building skin trades (masonry, EIFS, metal panels, tile, etc.). Pepper's Project Manager will follow up with trades and design team to ensure comments are incorporated into contract documents.

AAA. Preinstallation Quality Meeting: Pepper will lead a quality preinstallation meeting with each Trade Partner prior to starting work. The Trade Partner Project Manager and Foreman (on site) is required to attend this meeting. During this meeting, the team reviews the scope of work, submittals, plans, specifications, manufacturer's requirements, Trade Partner Quality Plan, and lessons learned as applicable. Note that the preinstallation meeting is by scope, not necessarily trade partner (some trade partners will have multiple preinstallation meetings). Preinstallation meetings last approximately one to three hours depending on the complexity of the scope of work. Subcontractors may be required to attend additional preinstallation meetings with affected/associated scopes as outlined in the project specifications.

BBB. Trade Partners that repeat issues or otherwise demonstrate a lack of expertise or understanding, will be required to participate in any training deemed necessary by Pepper's Director of Quality Management to bring the Trade Partner expertise to a level that will enable them to comply.

CCC. Provide verification/acceptance of existing conditions prior to work starting. Starting work is understood as acceptance of existing conditions/substrate.

DDD. It will be this subcontractors' responsibility to protect the existing paved areas, sidewalks, curbs, landscaped areas to remain from damage. Any damage to the roads caused by this subcontractor's scope of work will need to be repaired at their expense. If damage is not repaired, then Pepper Construction will make necessary repairs and will back charge. (Subcontractors responsibility to clean all roadways/sidewalks/paved areas associated with their work as daily or as directed by Pepper superintendent.)

EEE. Each subcontractor is responsible for their material and equipment. Any damages or loss of material or equipment will not be reimbursed by the project. If another subcontractor causes damage or loss a formal ticket must be issued and signed by both subcontractors. Upon completion of this step Pepper will issue formal change orders to associated subcontractor(s).

FFF. Failure to protect staged materials and in place work following project document requirements and this scope sheet will result in subcontractors' responsibility to replace at no cost to the project.

GGG. All materials are to be elevated on dunnage and covered during storage. Includes maintenance of both dunnage and covers. Any additional storage measures required by manufacturers, suppliers, or project documents, are included in this subcontract.

HHH. BIM PCCI Trade Coordination Protocol Document has been included in the project manual and necessary provisions and cost are to be covered by subcontractor.

III. Subcontractor superintendents/lead foreman and project managers are required to have a paid subscription to Autodesk Construction Cloud (ACC) for the duration of the project. All current drawings, specifications, RFIs, submittals, and reports will be coordinated through the ACC program. If the subcontractor does not comply a deduct of $5,000.00 will be assessed to the subcontractor in the form of a formal change order. The subcontractor must have this in place prior to the first pay application being approved in the form of a receipt.

JJJ. Superintendents/lead foreman are required to have an IPad or equivalent tablet to participate in punch lists and as-builts onsite through ACC. If the subcontractor does not comply a deduct of $2,500.00 will be assessed to the subcontractor in the form of a formal change order. No exception or deviations will be accepted.

KKK. Provide all testing required per the project specifications related to this scope of work unless explicitly noted as owner testing.

LLL. Coordinate with Pepper and Owners testing agency to set up Owner testing.

MMM. The above and following scope of work is intended to be general in nature. The intention is to have the successful subcontractor perform all related work shown on the contract documents other than those items specifically indicated below to be excluded. Should the documents disagree in themselves, or with each other, the scope of work shall be based on the most expensive combination of quality and quantity of work indicated.

1.7 CONSTRUCTION ALTERNATES

A. Alternate #1: Site Concrete
   1. Base Bid: Site concrete included with BP-02A scope of work.
   2. Alternate: Deductive alternate for BP-02A to remove all site concrete from BP-02A scope of work. Add alternate for BP-22 to pick up all site concrete in BP-22 scope of work.
      a. 03 30 01 – Site Cast-In-Place Concrete
         1) Provide all formwork, hardware, and formwork accessories.
         2) Provide and place all concrete reinforcing to the size and spacing as indicated.
         3) Subcontractor to include all concrete saw cutting as required per project drawings and specifications.
         4) It will be subcontractors' responsibility to sign off (either through formal email or physical paperwork) to Pepper on the subgrade prior to placement of stone.
         5) Include joint sealants for this scope of work.
         6) Included in this scope of work is all site concrete shown on L series drawings. S-series concrete is by BP-02A subcontractor.

B. Alternate #2: Joint Sealants, Acoustical Sealants, Firestopping
   1. Base Bid: Joint Sealants, Acoustical Sealants, Firestopping by BP-07 scope of work.
   2. Alternate: MEP bid packages to pick up associated joint sealants, acoustical sealants, and firestopping at their respective penetrations. BP-02A to pick up joint sealants at site concrete. Millwork and lab casework contractors to pick up joint sealants. Deductive alternate for BP-07 to remove MEP penetrations, site concrete, and millwork joint sealants, acoustical sealants, and firestopping.

EXHIBIT B – Bid Package 01 – Earthwork

PART 1 - GENERAL

1.1 PROJECT DRAWINGS & SPECIFICATION

A. Contract to include the following drawings for reference.

Bartholomew Consolidated School Corporation – New Elementary #12 – Maple Grove

1. For a full listing of drawings and specifications reference Exhibit A Drawings and Specifications Logs.
2. Scope Specific Specifications:

1)	00	Procurement and Contracting Requirements
2)	01	General Requirements
3)	31 10 00	Site Clearing
4)	31 20 00	Earth Moving
5)	31 20 10	Earthwork – Building
6)	31 25 00	Temporary Erosion and Sediment Control
7)	31 32 19	Geotextiles
8)	32 15 41	Crushed Granite Surfacing
9)	32 91 13	Topsoil Preparation
10)	33 05 00	Common Work Results for Utilities
11)	33 10 00	Water Distribution
12)	33 30 00	Sanitary Sewerage
13)	33 41 00	Storm Utility Drainage Piping
14)	33 46 00	Subdrainage
15)	33 46 05	Playground Subdrainage

1.2 PROJECT SPECIFIC CLARIFICATIONS

A. See attached Exhibit B.1

1.3 SCOPE SPECIFIC CLARIFICATIONS

A. Soils generated from excavation may be reused as fill and/or topsoil if they meet the project document requirements for fill and/or topsoil at the time of use, are properly stored, and are tested by third party testing agency. The subcontractor will be responsible for all excess soil generated from the site to be removed immediately.

B. Include with submittal package formal submittal of CAD file used for earthwork equipment for grading extents.

C. All additional backfill material will come from imported soil to be provided by this subcontractor.

D. Coordination of all testing required by specifications to be conducted with third party testing agency and to be set up a minimum of 24 hours prior to testing occurring.

E. Subcontractor to include all cost and required measures to remove existing soils from site and take to clean fill site. No additional funding will be procured for the removal of these items from the site.

F. If subcontractor does not maintain roads and construction entrances to avoid track out, it will be at the sole cost of the subcontractor to bring in a street sweeping subcontractor to complete required clean up and cover any fees from governing bodies.

G. Subcontractor to coordinate, obtain, and pay for all required permits associated with temporary lane and road closures outside of those indicated in project logistics plans.

H. Subcontractor to coordinate, obtain, and pay for all required permits, tap fees, curb cut fees, and all other associated permitting fees for work associated with this scope including the site utilities.

I. All necessary dewatering and/or temporary drainage work required for the complete execution of this scope of Work. Pumping and dewatering as required for this scope of Work. Temporary grading as required to maintain positive drainage. Subcontractor to include all costs for pumping and dewatering that could be reasonably anticipated from usual weather conditions in the area based on historical information and the time of anticipated construction. Prior to site excavation occurring subcontractor shall provide a submittal for project team review and approval of how subcontractor intends to complete dewatering process.

J. All set up of erosion and sediment controls are included in this scope and will be completed prior to the start of project mobilization and maintained through project duration (including maintenance of SWPPP inspections). Removal of SWPPP controls is by BP-13 subcontractor.

K. Ensure all exposed rebar is coated to ensure rusting does not occur.

L. Include all trace wire supply and installation for underground utilities per specifications and standards.

M. All required sleeves, cores, box out and saw cutting will be indicated on subcontractor's shop drawings for Engineer's approval prior to placement or cutting holes in castings or existing structures.

N. Subcontractor has included all necessary costs and provisions for this scope of work to complete the Pepper Construction BIM Execution Plan.

O. Subcontractors will be required to provide monthly As-Built information updates coinciding with installation. These shall be included with pay applications (pencil copies), if not provided pay applications will be rejected until current As-Builts received.

P. Subcontractor to provide Peppers' onsite supervision written notice per specifications of any scope items called out as providing a disruption to the existing facility or surrounding facilities. Add two additional workdays to all notices (i.e., if spec calls for a notice of a 3 days, then written notice to Pepper must be received 5 days prior to scope occurring).

Q. Tree protection fencing erection and maintenance through the duration of the project is included with this subcontract (including maintenance of SWPPP inspections). Removal is by BP-13 subcontractor.

R. Provide temporary protection/barriers around any holes/excavations to prevent falls were fencing it not already provided per the site logistics plan. This should include any handrails and temporary fencing based upon the size of openings. Plans to be coordinated with the Construction Manager before starting. Include removal of temporary protection once work is completed.

S. Subcontractors shall provide only certified flaggers for work occurring along or in public roads.

T. Should subcontractor encounter an existing MEP line underground that has not been disconnected and/or abandoned, subcontractor to report findings to Pepper construction, and disconnection work will be completed by BP-11 Electrical subcontractor, BP-10 HVAC and Geothermal subcontractor, and BP-09 Plumbing subcontractor. The removal of the underground electrical piping will still be included in this subcontractor's scope of work.

U. Site clearing and demo as noted in the project documents including woodland areas, grass/landscape/lawn/trash areas, asphalt, concrete curb, and misc. items is included in this scope of work. Remove electrical line, light pole, and concrete base (ref keynote 6/C101) after power disconnected and made-safe for removal by others. Include haul-off, dump fees, and legal disposal of all materials removed from site.

V. Subcontractor includes saw cutting at all edges of the site demolition scope. Subcontractor to leave a clean straight line at all existing asphalt and concrete surfaces to remain. Subcontractor to protect edge surfaces as required to maintain the integrity of the edges to remain.

W. Grading for this scope of work is to include removal of existing soils and rough grading to subgrade. Subgrade set by earthwork subcontractor no greater than -1". Excavation for foundations and foundation backfill to subgrade is by BP-02A Building and Site Concrete subcontractor. Topsoil/final grade is by BP-13 Landscape and Site Furnishings subcontractor.

X. It will be subcontractor's responsibility to sign off on subgrade with BP-02A Building and Site Concrete subcontractor prior to placement of stone. Handoff of subgrade from Earthwork subcontractor to concrete structure subcontractor to include walk and signoff by both parties. Earthwork subcontractor to ensure subgrade is set no greater than -1" from project documents. Signoff must be in the form of an email or physical paperwork which must include or be submitted to Pepper (CC on an email is acceptable).

Y. Locate, identify, and protect utilities and structures to remain from damage. Protect all site features to remain, including but not limited to benchmarks, utilities, sidewalks, paving, curbs, landscaping, and vehicular traffic.

Z. In areas where vehicular traffic including equipment has compacted soil, scarify to depth of three inches.

AA. Any soil placement must meet compaction and weather requirements outlined in the drawings and specifications.

BB. Any modifications to fencing deemed necessary are to be reviewed with Pepper Construction prior to moving the fence. Any additional fencing required to barricade off an excavation posing a hazard all cost is accounted for and included in this contract.

CC. General fill and backfill at foundation wall is included in this scope of work. Excavation for foundations and foundations backfill to subgrade is by BP-02A Building and Site Concrete subcontractor.

DD. Fill to correct over excavation must meet the requirements outlined in the drawings and specifications and is the responsibility of this subcontractor. All debris, water, unsatisfactory soil materials, obstructions, and deleterious materials must be removed prior to installing any fill.

EE. It is this subcontractor's responsibility to verify survey benchmarks and intended elevations for the work are as indicated.

FF. All excavation protection measures to meet governing body (including OSHA) requirements must be in place for the duration of this scope of work, including but not limited to sloping, benching, and additional excavation support systems. All measures required to meet safety standards are the responsibility of BP-01 Earthwork subcontractor. Refer to drawings and site logistics plan for shoring installation.

GG. Notify Pepper of any unexpected subsurface conditions immediately and discontinue affected work in area until notified to resume work.

HH. All excavation work must follow Pepper UUDP plan procedures.

II. Protect excavation as outlined in the drawings and specifications including but not limited to diversion of surface flow and water discharge, maintenance of soil stability, maintenance of subgrade moisture level, freezing, and any standing water.

JJ. Backfill according to requirements outlined in the drawings and specifications. Ensure not to fill over porous, wet, frozen, or spongey subgrades. Maintain optimal moisture content of fill material for correct compaction.

KK. Proof-rolled and verified subgrade at building pad.

LL. Compacted subgrade under asphalt paving, site concrete, and playground area.

MM. Compacted granular drainage fill under building slab-on-grade placed and rough-graded to within +/- 1" of proposed elevation (ref detail 1/S401). Re-dress and fine grading of granular base, vapor barrier, and concrete slab-on-grade to be by others.

NN. Compacted stone under playground surfacing placed and rough-graded to within +/- 1" of proposed elevation (ref details 1,3/L602). Re-dress and fine grading of stone base prior to installation of playground surfacing to be by others. Include geotextile fabric below stone base. Geotextile fabric between stone base and surfacing to be by others.

OO. Distribute topsoil across site at lawn and planting areas and rough grade to within +/- 1" of final topsoil grade. Topsoil amendments and testing to be by others. Fine grading of topsoil to be by others.

PP. Follow fill types called out in drawings and specifications based on type of utility in trench.

QQ. Subdrainage, damp proofing, and waterproofing, must be inspected prior to fill install. Proof of passing inspection must be provided to Pepper via email or physical copy. Coordinate with BP-

07 Joint Sealants, Firestopping, Dampproofing & Waterproofing, and Air Barriers subcontractor for damp proofing and waterproofing at foundation walls inspections.

RR. Existing features that contribute to erosion resistance should be maintained to the greatest extent possible that the construction limits and project allow.

SS. Sediment control structures that remain as permanent structures are to be cleaned at the end of the project.

TT. Subcontractor to coordinate drainage piping with BP-02A Building and Site Concrete subcontractor. Furnishing and install of drainage piping is to be included in this scope of work.

UU. This scope of work includes furnishing and installing all subdrainage, including but not limited to foundation wall subdrainage, perimeter drains, retaining wall drains, etc.

VV. Furnish and coordinate any required sleeves for MEP's installed by BP-01 Earthwork subcontractor with BP-02A Building and Site Concrete subcontractor.

WW. All new utility and associated equipment/accessories must follow Pepper UUDPP documentation requirements.

XX. Perform work for all site utilities (except site electrical and sanitary) and terminating inside the building footprint via stub up 1' above finish floor or 1' past finish face of interior wall with blind flange according to location and type of entry shown on civil and plumbing plans. This shall include but not limited to domestic and fire lines.

YY. Fire and domestic water piping and appurtenances including vault, meters, PIV, FDC, hydrants, valves, and valve boxes (ref C801). Provide connection to existing waterline per C501.

ZZ. Sanitary sewer piping and appurtenances including clean-outs, grease trap, sample box, and testing (ref C802). Provide connection to existing sanitary line including potholing per C501.

AAA. Extend sanitary sewer and storm to within 5' of building footprint with blind flange for continuation by others. Include all exterior clean-outs. Pipe sleeves and extension of sanitary sewer into building footprint to be by others.

BBB. Storm piping and appurtenances including structures, Aqua-Swirl XCelerator units, and underdrains (ref C803 and C804). Provide piping turn-ups at downspout connections including cast iron downspout shoes (ref detail 414/C800).

CCC. Includes all allocations to tie new site utilities into existing piping.

DDD. Group piping with other site piping work whenever practical.

EEE. Provide all field engineering assuring that grades during installation are being achieved.

FFF. Provide all excavation, bedding, backfill, pipe, fittings, and accessories.

GGG. Provide all sanitary sewer structures complete with castings, lids, steps, and accessories including water quality units.

HHH. Coordinate with associated governing body for all necessary inspections and connections to city system for each site utility.

III. Includes all allocations to tie system into storm sewer system.

JJJ. Includes all allocations to tie new site utilities into existing structures and piping.

KKK. Provide all storm sewer structures complete with castings, lids, steps, and accessories including water quality units.

LLL. Provide all subsurface drains, excavation, bedding, backfill, pipe, fittings, connections to inlet structures, and accessories.

MMM. Subcontractor includes all dust control measures while on site.

NNN. Subcontract includes installation and maintenance of two construction entrances. Maintenance is included for the duration of the project along with removal and re-grading just prior to asphalt installation in these two locations.

OOO. Refer to logistics plan for locations where temporary stone must be furnished, installed, maintained, and removed around perimeter of building through precast panel installation as part of this subcontract. Refer to logistics plan for locations where stone must be furnished, installed, and maintained for construction roads and parking which will later be re-graded as part of this subcontract, prior to final surfacing by others.

PPP. Soil stabilization at building pad is included in this scope of work.

1.4 EXCLUSIONS

A. The following items have been specifically excluded from this bid package:
   1. Payment and performance bond.
   2. Full time, non-working safety professional.
   3. Subcontractor to not include detailed excavation or backfill for foundation footings, elevator pits, interior footings, site electrical trenching, and interior building MEPs.
   4. Site concrete
   5. Aggregate base under site concrete
   6. Asphalt paving
   7. Aggregate base under asphalt paving
   8. Geothermal
   9. Bollards
   10. Barrier gate
   11. Gas service and meter
   12. Electrical underground service or associated trenching and duct bank
   13. Telecom underground service or associated trenching or directional bore for service connection

1.5 ALLOWANCES

All allowances shall only be approved for use or deduction from subcontract by Pepper Construction through written notice. At the end or anytime at Pepper Constructions discretion any and all unused allowances can be deducted from the subcontract through a formal change order.

A. Composite cleaning crew: All subcontractors provide a laborer, on a weekly basis, to compile a composite crew that will be utilized for construction cleaning at the sole direction of Peppers' superintendent. Subcontractors will only be required to provide an individual only during the time the subcontractor or tiered subcontractors are performing work onsite. This shall be figured at 8 hours per week. Value $_____

B. Include allowance for stone maintenance of egress points into site, adding stone as directed by Pepper Construction above and beyond provisions set forth by project documents and scope. Value $25,000.00

C. Removal or relocation of unknown existing utilities or obstructions encountered: $50,000

D. Over-excavation of unsuitable soils encountered and replacement with structural fill: $30,000

E. Dust control measures above and beyond: $30,000

1.6 DESIGN ALTERNATES

1. Alternate #1: Site Aggregate Path Alternate.
2. Alternate #2: Playground Surfacing Alternate.
3. Alternate #3: Telescoping Stands and Retractable Audience Seating Alternate.
4. Alternate #4: Motor Operated Roller Shades Alternate.
5. Alternate #5: Area Rugs Alternate.

1.7 CONSTRUCTION ALTERNATES

1. Alternate #1: Site Concrete
2. Alternate #2: Joint Sealants, Acoustical Sealants, Firestopping

1.8 UNIT PRICES

A. Current Labor Rates (do not include overhead and profit).

B. Current rate for triaxial load of material to dump at clean waste facility.

C. Current rate for triaxial load of material delivered to site:

1. Sand
2. Topsoil
3. Stone - 53s
4. Stone – 56s
5. Stone - #2s

D. Over-excavation of unsuitable soils encountered and replacement with structural fill. Include removal/disposal of unsuitable material and import of structural fill material. $/CY

1.9 BREAKOUTS

A. Demo

B. Earthwork

C. SWPPP

D. Fire & Domestic Water

E. Sanitary Sewer

F. Storm Sewer & Drainage

G. Allowances

PRODUCTS (Not Used)

PART 2 - EXECUTION (Not Used)

END OF SECTION 01 00 00

EXHIBIT B – Bid Package 02A – BUILDING & SITE CONCRETE

PART 1 - GENERAL

1.1 PROJECT DRAWINGS & SPECIFICATION

A. Contract to include the following drawings for reference.

Department of Administration, Public Works – Indiana State Archives Project No. 49020034-22-009-D1

1. For a full listing of drawings and specifications reference Exhibit A Drawings and Specifications Logs.
2. Scope Specific Specifications:
   1) 00 Procurement and Contracting Requirements
   2) 01 General Requirements
   3) 03 30 00 – Cast-In-Place Concrete
   4) 03 30 01 – Site Cast-In-Place Concrete
   5) 03 35 00 – Concrete Surface Treatment
   6) 03 54 16 – Hydraulic Cement Underlayment
   7) 07 21 00 - Thermal Insulation (Partial)
   8) 26 05 00 – Common Work Results for Electrical (Partial)
   9) 26 05 44 – Sleeves and Sleeve Seals for Electrical Raceways and Cabling (Partial)
   10) 32 05 16 – Aggregate Pavements (Partial)
   11) 32 11 23 – Granular Base (Partial)
   12) 32 13 13 – Concrete Paving
   13) 32 17 23 – Paving Marking (Partial)

1.2 PROJECT SPECIFIC CLARIFICATIONS

A. See Attached Exhibit B.1.

1.3 SCOPE SPECIFIC CLARIFICATIONS

A. The above and following scope of work is intended to be general in nature. The intention is to have the successful subcontractor perform all related work shown on the contract documents other than those items specifically indicated below to be excluded. Should the documents disagree in themselves, or with each other, the scope of work shall be based on the most expensive combination of quality and quantity of work indicated.

B. Subcontractor to provide 2 scaffold stair systems to access each level and each level of the roof through duration of concrete subcontractor is onsite. Scaffold systems must be made available to other trades during this duration.

C. The concrete subcontractor will be responsible for temporary heat and all-weather protection to meet the project schedule for this scope of work (including but not limited to temporary indirect heaters (no electrical hook up available), fuel, concrete blankets, temp enclosures, and etc.). No additional funds will be allocated after bid time.

D. Subcontract to include all concrete work shown on the S-series drawings, including but not limited to: building foundations, building superstructure, equipment yard, foundations, walls, slab on grade, housekeeping pads, etc.

E. Coordinate flowable fill testing with Pepper for Owner testing setup.

F. Complete grouting of elevator sills after elevator contractor has set sills at doors. Include separate mobilizations for each elevator.

G. Subcontractors to supply, install/modify, and remove temporary protection either through barricades or covers around all excavations related to concrete scope.

H. Furnish and install all required vapor barrier(s) as defined by the project documents.

I. Provide all formwork, hardware, and formwork accessories.

J. Provide and place all concrete reinforcing to the size and spacing as indicated.

K. Subcontractor to include all concrete saw cutting as required per project drawings and specifications.

L. Include rubbing/patching of concrete as required for acceptable finish at all exposed concrete, and waterproofing surfaces.

M. Subcontractor to furnish and install water stops at all locations shown embedded in concrete.

N. Subcontractor provides all required provisions including but not limited to labor, materials, and equipment to install project required mock-ups.

O. Work with Pepper construction to set up preconstruction meeting with design team prior to mobilization. Ensure all parties will be attending in person.

P. Subcontractor to confirm prior to bid day that all durations provided in the project schedule will allow for ample time to complete installation.

Q. All interior slabs are to be cured utilizing Ultra Cure (Wet Curing) blanket system. Subcontractor to include all cost to install, maintain, and removal.

R. Self-leveling used for floor systems will be supplied and installed by flooring subcontractor bid packages. The concrete subcontractor will be held responsible for any major floor prep cost related to the finish floor flatness of the slabs.

S. Include any integrated stair treads/risers.

T. Include extra slab curing additives in the gym area in order to install wood flooring per the construction schedule.

U. Include all concrete curbs associated with the kitchen equipment (coolers, walk-in freezers, etc.)

V. Pepper will conduct a BIM scan of each phased install of reinforcement systems prior to concrete placement. These models will be turned over to ownership as part of As-Builts.

W. Subcontractor to layout and install precast embeds. Embeds will be provided by Precast subcontractor.

X. Layout and install all anchor bolts. Column anchor bolt templates to be provided by steel subcontractor for conformity.

Y. Subcontractor to include installation of all anchor bolts for steel columns. Both anchor bolts and base plates will be provided by Steel Subcontractor (others), but it will be this subcontractor's responsibility to install as required.

Z. Subcontractor to include grouting of all base plates as required.

A. The subcontractor is responsible for all costs resulting from damage to MEP subcontractors' sleeves, embeds, grounding/lightening protection, and etc. due to concrete installation.

AA. Subcontractor to provide and install all plumbing interior and exterior housekeeping pads, support pads, and curbs per contract documents. Finalized sizing to be provided through shop drawings from plumbing subcontractor. Layout to be performed by concrete subcontractor. Any additional pads or curbs not identified prior to bidding will be picked up by Plumbing subcontractor.

BB. Sleeves will be provided and installed by the plumbing subcontractor.

CC. Plumbing subcontractor to supply and install anchor-bolt(s) into pads.

DD. The plumbing subcontractor will supply and install floor drains, cleanouts, and trench drains prior to concrete placement. Concrete subcontractor to finish and slope slabs to drain following project requirements.

EE. Subcontractor to provide and install all HVAC interior and exterior housekeeping pads, support pads, and curbs per contract documents. Finalized sizing to be provided through shop drawings from HVAC subcontractor. Layout to be performed by concrete subcontractor. Any additional pads or curbs not identified prior to bidding will be picked up by HVAC subcontractor.

FF. Subcontractor to assist with coordination of penetrations through concrete systems to ensure they are not in conflict with reinforcing. HVAC subcontractor will provide shop drawings through BIM coordination process to be overlayed with concrete subcontractor's shops.

GG. Sleeves/boxouts will be provided and installed by the HVAC subcontractor.

HH. HVAC subcontractor to supply and install anchor-bolt(s) into pads.

II. Subcontractor to provide and install all Electrical interior and exterior housekeeping pads, support pads, and curbs per contract documents. Finalized sizing to be provided through shop drawings from electrical subcontractor. Layout to be performed by concrete subcontractor. Any additional pads or curbs not identified prior to bidding will be picked up by an electrical subcontractor.

JJ. Subcontractor to assist with coordination of penetrations through concrete systems to ensure they are not in conflict with reinforcing. Electrical subcontractor will provide shop drawings through BIM coordination process to be overlayed with concrete subcontractor's shops. JJ

KK. Sleeves will be provided and installed by the electrical subcontractor.

LL. Electrical subcontractor to supply and install anchor-bolt(s) into pads.

MM. Subcontractor to include all costs to furnish and install stone subgrade for concrete areas included in the package.

NN. It will be subcontractors' responsibility to sign off (either through formal email or physical paperwork) to Pepper on the subgrade prior to placement of stone.

OO. Concrete subcontractor shall not install stone until electrical and plumbing subcontractors have installed their underground.

PP. Handoff of subgrade from earthwork subcontractor to concrete structure subcontractor to include walk and signoff by both parties prior to foundation placement. Earthwork subcontractor to ensure subgrade is not left greater than -1" from project documents.

QQ. All spoils generated from foundation installation are the responsibility of the concrete subcontractor to remove from site. No on-site soil storage is allowed. Material is required to go to a clean fill waste site. All costs associated with trucking and disposal are included in this scope of work. No additional funds will be procured for this work.

RR. Concrete subcontractor to include supply and install of all stone from subgrade to underside of slab on grade. Subcontractor to perform all compaction and fine grading of stone subgrade as required. Any modifications by other trades such as electrical or plumbing subcontractor will be their responsibility to correct or formal back charge issued to them to have concrete subcontractor correct stone base.

SS. Plumbing subcontractor to install prior to concrete pour installation of roof drain systems.

TT. Subcontractor to include detailed excavation (including removal of soils from site) and backfill for all footings and elevator pits.

UU. Soils generated from excavation of foundations may be reused as fill if they meet the project document requirements for fill and/or topsoil at the time of use, are properly stored, and are tested by a third party testing agency. This subcontractor will be responsible for all excess soil generated from the site to be removed immediately.

VV. Coordinate with Pepper (Pepper will contact A/E) and owners 3rd party testing agency for field quality control.

WW. Subcontractor to supply and install all required back fill for foundation wall systems utilizing imported materials.

XX. Concrete subcontractor will be required to backfill all footings utilizing imported materials.

YY. Individual subcontractors will be responsible for supply and installation of their systems pre-installed embeds. Subcontractor will be responsible for attending BIM coordination meetings too as placement of embeds will need to be reviewed in comparison with concrete structure reinforcement systems. Prior to placement of embeds a finalized layout plan will be signed off by all parties and turned over to field teams to install embeds and reinforcement systems. Any modifications in the field must result in a red line that is then updated and captured in the BIM model.

ZZ. The concrete subcontractor is responsible at time of wrecking forms to ensure all embeds are free of concrete. Any embed found to have concrete in it shall be cleaned by concrete subcontractor. Concrete subcontractor is solely responsible for replacement of any damaged embeds that occur during concrete placement, form removal, and reshoring.

AAA. Subcontractor to layout and install all concrete embeds provided by steel and elevator subcontractors.

BBB. Work with Owner's testing agency in preparing material samples. No pours shall occur without samples being collected.

CCC. Subcontractor to include all necessary dewatering and/or temporary drainage work required for the complete execution and installation of concrete. Pumping and dewatering as required for this scope of Work. Temporary grading is required to maintain positive drainage. Subcontractor to include all costs for pumping and dewatering that could be reasonably anticipated from usual weather conditions in the area based on historical information and the time of anticipated construction. At the time of completing the install of the concrete elevator pits subcontractor shall set a temporary pump (VEVOR 1.5 HP Submersible Cast Iron, or equal unit) inside of each sump pit, placed inside of a bucket, with a float, a 200' of discharge hose, 300' of extension cord, and a GFCI cord attachment. Subcontractor to provide an additional two (2qty) pumps (same Vevor 1.5hp unit or equal) to Pepper Construction at time of project mobilization. These and the other units are to remain onsite and will not be returned to the subcontractor. Failure to complete this process as defined above will result in Pepper completing this process and all associated cost incurred being sent through as a back charge to the subcontractor in the amount of $4,500.

DDD. Include control joints and saw cutting of slabs as required per the Contract Documents.

EEE. Include joint sealants for this scope of work.

FFF. Include slab expansion and transition details as required per the Contract Documents.

GGG. Include below-grade rigid insulation at locations as shown per Documents.

HHH. Include concrete stair pan and landing infills.

III. Include toe-boards at all elevated pan slab perimeter locations (setup only).

JJJ. Include installation of any pipe bollards as shown per Documents.

KKK. Include moisture retention curing for slabs so curing compounds won’t need removed prior to flooring.

LLL. Include all slab recesses, pour stops, turn downs, thickened slabs, etc. as shown and required per Documents.

MMM. Do not include moisture mitigation additives or accelerators in your base bid.

NNN. Include task lighting as necessary for slab pours.

OOO. Include concrete washout dumpsters/slurry cleanup for all required concrete work.

PPP. Include coordination of pipe sleeves with MEP trades as required.

QQQ. Include in your base bid material, labor and equipment costs to meet project schedule. No additional costs will be given for material escalation, labor burden increases, commodity increases, etc.

RRR. Labor and equipment rates are to be submitted with your bid proposal.

SSS. Paint all steel below grade with 2-coats of asphaltum or encase in minimum 4" of concrete as noted in the structural drawings.

TTT. Include any costs associated with the visual, stand-alone mockup per 01 45 10.

1.4 EXCLUSIONS

A. The following items have been specifically excluded from this bid package:
   1. Dumpsters

1.5 ALLOWANCES

A. Composite cleaning crew: All subcontractors provide a laborer, on a weekly basis, to compile a composite crew that will be utilized for construction cleaning at the sole direction of Peppers' superintendent. Subcontractors will only be required to provide an individual only during the time the subcontractor or tiered subcontractors are performing work onsite. This shall be figured at 8 hours per week.

1.6 DESIGN ALTERNATES:
   1. Alternate #1: Site Aggregate Path Alternate.
   2. Alternate #2: Playground Surfacing Alternate.
   3. Alternate #3: Telescoping Stands and Retractable Audience Seating Alternate.
   4. Alternate #4: Motor Operated Roller Shades Alternate.
   5. Alternate #5: Area Rugs Alternate.

1.7 CONSTRUCTION ALTERNATES:
   1. Alternate #1: Site Concrete
   2. Alternate #2: Joint Sealants, Acoustical Sealants, Firestopping

1.8 UNIT PRICES

A. Current Labor Rates (do not include overhead and profit).

B. Moisture mitigation additives (give options for all accelerators and timing options $/cy)

C. Rebar material and labor - $/ton

1.9 BREAKOUTS

A. Building Concrete

B. Site Concrete

C. Joint Sealants

D. Mockup

PRODUCTS (Not Used)

PART 2 - EXECUTION (Not Used)

END OF SECTION 01 00 00

EXHIBIT B – Bid Package 02B – Building Masonry

PART 1 - GENERAL

1.1 PROJECT DRAWINGS & SPECIFICATION

A. Contract to include the following drawings for reference:
Bartholomew Consolidated School Corporation – New Elementary #12 – Maple Grove
1. For a full listing of drawings and specifications reference Exhibit A Drawings and Specifications Logs.
2. Scope Specific Specifications:
1) 00 Procurement and Contracting Requirements
2) 01 General Requirements
3) 04 Masonry
4) 05 50 00 Metal Fabrications (Partial)
5) 07 62 00 Sheet Metal Flashing and Trim (Partial)
6) 08 11 13 Hollow Metal Doors and Frames (Partial)
7) 08 31 13 Access Doors and Frames (Partial)
8) 20 00 50 Common Materials and Methods for Fire Suppression, Plumbing and HVAC (Partial)
9) 26 05 44 Sleeves and Sleeve Seals for Electrical Raceways and Cabling (Partial)

1.2 PROJECT SPECIFIC CLARIFICATIONS

A. See attached Exhibit B.1

1.3 SCOPE SPECIFIC CLARIFICATIONS

A. Ensure all exposed rebar is coated to ensure rusting does not occur.

B. All scaffold buildings associated with this scope of work to be completed by certified scaffold builders. Scaffolds shall meet all OSHA and Pepper requirements.

C. Scaffolding:
1. The scaffolding system being used must support 4 times the maximum intended load and must be designed by a qualified person. Scaffolds must be inspected daily by a competent person before each use and tagged/signed off appropriately.
2. All scaffold planking must be scaffolding grade lumber.
3. Employees working on, erecting, disassembling, or moving the scaffold must receive training in safe work practices.
4. A limited access zone must be established on the un-scaffolded side of the masonry wall which equals the height of the wall plus 4'.
5. All walls over 8' in height must be braced to prevent overturning or collapse. The braces must be of sufficient strength to support the wall based on the forces applied by wind conditions. Winds over 20 mph on newly built walls exert considerable force. When winds over 35 mph occur, employees must evacuate the area.

6. Masonry saws or partner saws must be provided with water systems to reduce the likelihood of employees being exposed to silica levels above the PEL.
7. Employees exposed to silica dust must be provided with and utilize the appropriate respirator including proper fit testing.
8. Respiratory Protection – Respirators are required when dust, mist, fumes, or vapors exceed the OSHA PEL's. Employees wearing respirators must receive training, medical evaluations, and respirator fit testing prior to beginning work.
9. When exposed to airborne silica can be expected, sampling may be required to determine OSHA PEL.
10. All employees operating forklifts must have been trained in and have certification in forklift training.
11. Subcontractors scaffold system must be made available to other trades for install of inwall MEP systems.

D. If water is used from a public source, the backflow preventor and/or meter will be provided as part of this scope of work.

E. Subcontractor to include all labor, material, tools, equipment, supervision necessary to complete this scope of work. This includes, but is not limited to masonry ties, anchors, clips, reinforcing steel, horizontal reinforcing, mortar, grout, wire mesh, wall ties, flashings and other masonry accessories required to provide complete CMU masonry systems.

F. Supply and install of reinforcing steel into concrete slabs for masonry walls is included.

G. Provide all and securely install temporary waterproof sheeting to be placed over the tops of wall, projections, and sills at end of each workday. Ensure per specifications there is a minimum of 24 inches coverage down both sides of the wall.

H. Provide all masonry wall types shown in the construction documents.

I. Provide specialty masonry shapes including but not limited to bull-nosed inside and outside corners, radius concrete block, lintels, headers, expansion joints, control joint edges, etc.

J. Provide bracing for walls extending above 8' in height until permanent lateral bracing is installed. Braces must be supported by means other than anchoring to finished construction (i.e., no anchoring to finished slabs, foundation walls, etc.).

K. Coordinate with MEP contractors for through-wall penetrations and installation of other trade provided sleeves.

L. Provide masonry cleaning leaving units ready for painting.

M. Protect adjacent materials from staining both during masonry installation and during any cleaning as outlined in the project specifications. If sand is to be used to prevent adhesion to concrete slab surface, all associated sand, cleanup, and washing to leave the slab in the condition it was prior to the masonry work is included in this scope.

N. Provide units made with integral water repellent for exposed units. Use liquid water-repellent mortar admixture for mortar in use with these units.

O. Before installation, examine and verify rough-in and built-in construction for MEP systems to verify actual locations of piping for any MEPs in masonry walls.

P. Acoustic sealant and firestopping will be by BP-07 Joint Sealants, Fireproofing and Firestopping, Dampproofing & Waterproofing, and Air Barriers subcontractor.

Q. Install only of all door frames in masonry walls is included in this scope of work. Furnish of frames is by BP-17A General Trades Door Systems subcontractor. BP-02B Masonry subcontractor is responsible for the frame being plumb, square, and level to ensure proper function of door and hardware upon installation. The subcontractor is responsible for coordinating with Pepper and associated subcontractors to ensure all door access control system pathways are installed prior to installing block. All requirements for grouting the frame are to be completed by building masonry subcontractor.

R. All lintels are furnished and installed as part of this scope of work. Coordinate lintels with MEP's as required based on maximum opening sizes and MEP coordinated model. Masonry "lifts" (low or high) should be installed in such a way as to allow for a complete MEP installation with cutting/notching/or removal of CMU included in this scope of work.

S. Provide detailed control joint plan. All accessories required for joints to make a complete joint per the construction documents are included in this scope of work.

T. Subcontractor to maintain 0'-2" of spacing between top of masonry wall systems and concrete deck for any walls running to deck. Top of 2" space must be clear of all masonry or excess grout/material and prepped for mineral wool/sealants/firestopping/etc.

U. Sealant compatibility and adhesion testing to be included as part of this scope of work.

V. Immediately remove mortar and soil to prevent them from staining stone masonry face as outlined in the specifications.

W. Keep sealant joints free of mortar and other rigid material. Joint sealants to be furnished and installed under BP-07.

X. Follow cleaning procedures outlined in the project documents including cleaning process and approval.

Y. BP-02B Masonry subcontractor is responsible for furnishing and installing all shelf angles required for the scope of work outlined in this bid package.

Z. BP-02B Masonry subcontractor is responsible for furnishing and installing wedge-type concrete inserts complete with fasteners, to attach shelf angles to cast-in-place concrete.

AA. Bearing plates and associated anchors/accessories are provided by BP-04 Structural and Misc. Steel. BP-02B Masonry includes coordination with BP-04 and installation of components embedded in masonry system grouting (i.e. bolts).

BB. Coordinate all lateral support locations with BP-04 subcontractor. See details on S403 for reference.

CC. All channel slots shop welded to steel are furnished and installed by BP-04 subcontractor. Included in this subcontract is coordination and supply of drawings to BP-04 for their shop install of said channels.

1.4 EXCLUSIONS

A. The following items have been specifically excluded from this bid package:
   1. Payment and performance bond.
   2. Full time, non-working safety professional.
   3. Joint Sealants
   4. Firestopping

1.5 ALLOWANCES

All allowances shall only be approved for use or deduction from subcontract by Pepper Construction through written notice. At the end or anytime at Pepper Constructions discretion any and all unused allowances can be deducted from the subcontract through a formal change order.

A. Composite cleaning crew: All subcontractors provide a laborer, on a weekly basis, to compile a composite crew that will be utilized for construction cleaning at the sole direction of Peppers' superintendent. Subcontractors will only be required to provide an individual only during the time the subcontractor or tiered subcontractors are performing work onsite. This shall be figured at 8 hours per week. Value $_____

1.6 DESIGN ALTERNATES
   1. Alternate #1: Site Aggregate Path Alternate.
   2. Alternate #2: Playground Surfacing Alternate.
   3. Alternate #3: Telescoping Stands and Retractable Audience Seating Alternate.
   4. Alternate #4: Motor Operated Roller Shades Alternate.
   5. Alternate #5: Area Rugs Alternate.

1.7 CONSTRUCTION ALTERNATES
   1. Alternate #1: Site Concrete
   2. Alternate #2: Joint Sealants, Acoustical Sealants, Firestopping

1.8 UNIT PRICES

A. Current Labor Rates (do not include overhead and profit).

1.9 BREAKOUTS

A. Masonry Material

B. Masonry Install Labor

PRODUCTS (Not Used)

PART 2 - EXECUTION (Not Used)

END OF SECTION 01 00 00

EXHIBIT B – Bid Package 03 – PRECAST ARCHITECTURAL CONCRETE

PART 1 - GENERAL

1.1 PROJECT DRAWINGS & SPECIFICATION

A. Contract to include the following drawings for reference
Department of Administration, Public Works – Indiana State Archives Project No. 49020034-22-009-D1
1. For a full listing of drawings and specifications reference Exhibit A Drawings and Specifications Logs.
2. Scope Specific Specifications:
1) 00 Procurement and Contracting Requirements
2) 01 General Requirements
3) 03 45 00 – Precast Architectural Concrete
4) 07 21 00 – Thermal Insulation (Partial)
5) 07 62 00 – Sheet Metal Flashing & Trim (Partial)
6) 07 92 00 – Joint Sealants (Partial)

1.2 PROJECT SPECIFIC CLARIFICATIONS

A. See Attached Exhibit B.1.

1.3 SCOPE SPECIFIC CLARIFICATIONS

A. The following items are to be specifically included in this bid package:

1. All layout associated with this scope of work has been considered and is included in the base bid. Control points or benchmarks to be established by Pepper Construction Company in coordination with the site utilities subcontractor

2. Schedule – A milestone schedule is included herein the bid documents. Upon award, all subcontractors shall participate in a pull-planning meeting on site in which a detailed schedule showing interaction & coordination among all trades will be created & mutually agreed upon. The project manager and field supervisor responsible for each bid category should be present at each pull planning session.

3. Provide separate submittal/shop drawings for the building mockup. This will require an early, separate delivery of mockup material in advance of the building material. Any additional shipping/freight charges, mobilizations, equipment, etc. to erect the mockup are to be included in this bid.

4. Base bid to include complete installation. This includes but is not limited to; layout, field measuring openings, shop drawings and calculations, samples, shims, anchors, support/tie in to building structure, expansion anchors/clips and considerations, sealants, caulking, testing, and a complete warranty as outlined in the construction documents.

5. Delegated design shop drawings and calculations to be included in the base bid. Precast subcontractor to submit a detailed plan on how they plan to tie into building structure with bid submission (anchors and support). Anchorage to building structure should be included in base bid, provide expansion and thermal requirements as required by construction documents.

6. **This subcontractor is responsible for any cutouts necessary for any cutouts/blockouts that are 12" diameter and greater during fabrication with coordination with all trade contractors. Penetrations smaller than 12" diameter are the responsibility of other trade contractors.**

7. Include all temporary conditions and safety measures required for your scope.

8. Provide necessary equipment per project logistics and safety requirements.

9. Include complete precast scope of work, including but not limited to, sandwich panel insulation, delegated design, installation, welding, furnish and install of clips/embeds/supplemental steel required, furnish of components for install by other trades as required, engineered design, calculations, shop drawings, joint sealants, etc.

10. Include back of panel finish in exposed areas per the Contract Documents.

11. Furnish and install all shims and bearing pads as required. Include shimming and grouting as required.

12. Include notch in precast panels (ref: 4/A430) at locations indicated in the Documents. 08 44 13-E metal trim by others.

~~**13. If applicable, door frame channel assemblies cast into precast wall panels.**~~

14. Include all casting-in of MEP hardware. To be supplied by MEP contractors to precast plant.

15. Include all casting-in of electrical/low-voltage assemblies as required by the Documents.

16. Include costs for coordination of plates, embeds, etc. with other trades.

17. Include cleaning top of footing/foundation wall and prepping for precast panel installation.

18. Include grouting and patching as needed.

19. Include in your bid material, labor, and equipment costs to meet project schedule. No additional costs will be given for material escalation, labor burden increases, commodity increases, etc.

20. Labor and equipment rates are to be submitted with your bid proposal.

B. Include any costs associated with the visual, stand-alone mockup per 01 45 10.

C. This subcontractor is responsible for all fossil imprints as referenced in the Documents. Paper or additive shape to be reviewed with precaster for cost effectiveness.

1.4 EXCLUSIONS

A. The following items have been specifically excluded from this bid package:
1. Copings
2. Firestopping (to be completed by other bid packages)
3. Spray foam insulation (to be completed by other bid packages)
4. Dumpsters

1.5 ALLOWANCES

A. Composite cleaning crew: All subcontractors provide a laborer, on a weekly basis, to compile a composite crew that will be utilized for construction cleaning at the sole direction of Peppers' superintendent. Subcontractors will only be required to provide an individual only during the time the subcontractor or tiered subcontractors are performing work onsite. This shall be figured at 8 hours per week.

1.6 DESIGN ALTERNATES:
1. Alternate #1: Site Aggregate Path Alternate.
2. Alternate #2: Playground Surfacing Alternate.
3. Alternate #3: Telescoping Stands and Retractable Audience Seating Alternate.
4. Alternate #4: Motor Operated Roller Shades Alternate.
5. Alternate #5: Area Rugs Alternate.

1.7 CONSTRUCTION ALTERNATES:
1. Alternate #1: Site Concrete
2. Alternate #2: Joint Sealants, Acoustical Sealants, Firestopping

1.8 UNIT PRICES

A. Current Labor Rates (do not include overhead and profit.

1.9 BREAKOUTS

A. Visual, Stand-Alone Mockup

B. Precast Wall Panels

C. Joint Sealants

1.10 PRODUCTS (Not Used)

PART 2 - EXECUTION (Not Used)

END OF SECTION 01 00 00

EXHIBIT B – Bid Package 04 – STRUCTURAL & MISCELLANEOUS STEEL

PART 1 - GENERAL

1.1 PROJECT DRAWINGS & SPECIFICATION

A. Contract to include the following drawings for reference

Department of Administration, Public Works – Indiana State Archives Project No. 49020034-22-009-D1

1. For a full listing of drawings and specifications reference Exhibit A Drawings and Specifications Logs.
2. Scope Specific Specifications:
   1) 00 Procurement and Contracting Requirements
   2) 01 General Requirements
   3) 05 12 00 – Structural Steel Framing
   4) 05 21 00 – Steel Joist Framing
   5) 05 31 00 – Steel Decking
   6) 05 50 00 – Metal Fabrications (Partial)
   7) 05 51 13 – Metal Stairs
   8) 05 52 13 – Aluminum Pipe and Tube Railings
   9) 05 73 00 – Decorative Metal Railings
   ~~10) 06 10 53 – Miscellaneous Rough Carpentry (Partial)~~
   ~~11) 07 62 00 – Sheet Metal Flashing & Trim (Partial)~~
   ~~12) 07 72 00 – Roof Accessories (Partial)~~

1.2 PROJECT SPECIFIC CLARIFICATIONS

A. See Attached Exhibit B.1.

1.3 SCOPE SPECIFIC CLARIFICATIONS

A. The following items are to be specifically included in this bid package:

B. All layout and engineering as required to complete the scopes including miscellaneous metals and metal canopies scopes of work. Layouts to be conducted by use of total station or equivalent system. Pepper to provide control points.

C. Include all required task temporary lighting as required for this scope of work.

D. Provide temporary protection/barriers around the erection of the steel onsite. This should include any barricades and signage. Plans to be coordinated with the Construction Manager before starting.

E. This contract includes all traffic control as necessary pertaining to subcontractors' scope of work.

F. It will be this contractors' responsibility to protect the existing paved areas, sidewalks, curbs, landscaped areas to remain from damage. Any damage to the roads caused by this subcontractor's scope of work will need to be repaired at their expense. If damage is not repaired, then Pepper Construction will make necessary repairs and will back charge.

G. Include required mobilizations and demobilizations based upon provided project schedule.

H. Includes daylight work hours and 2nd shift as required to maintain schedule.

I. Placement of welding machines and associated equipment placement to be coordinated with Pepper field supervision.

J. Prior to site mobilization provide written plan for review of proposed equipment utilized to erect steel, stairs, and loading building with decking. Identify any critical lifts to occur. Plan to be reviewed by Pepper Safety department.

K. The subcontractor acknowledges the Site Logistics plan included in bidding documents and will utilize this plan as a reference for what is intended and expected from Pepper Construction.

L. Provide and deliver to site required spare parts for owner's attic stock. Ensure all items are counted and a transmittal is provided with each delivery. Coordinate with Pepper.

M. The subcontractor is given authority to make minor adjustments, with prior approval from Pepper superintendent to the site logistics plan where means of efficiency for the project can be achieved. Subcontractor acknowledges that if the plan is adjusted, and the end result of the adjustment increases the scope of work for either Pepper or any other subcontractor onsite, subcontractor is subject to a back charge as may be required.

N. Subcontractor to provide the following items identified below (including delivery to jobsite). Review of project schedule and coordinate delivery with Cast-In-Place Concrete trade partner.
   1. Stair Framing – Division 5 (Cast-In-Place Concrete Subcontractor to complete pouring of stair treads and landings).

O. Subcontractor to provide the following items identified (including delivery to jobsite). Review of project schedule and coordinate delivery with Masonry trade partner.
   1. Elevator Shafts Angle
   2. Dispatch Angles

P. Supply and install steel angle around the interior and exterior side of elevator shafts at the top. This work shall occur after the fire stopping subcontractor has completed "stuffing and spraying" of joint between masonry block and roof deck.

Q. Subcontractor to include all labor, materials, tools, equipment, and supervision necessary to complete the steel scope of work.

R. Contract includes the furnish and install required for steel scope including but not limited to the following items as shown on the project drawings and noted on project specifications:
   1. Structural Steel
   2. Steel Roof Deck

3. Composite Steel Floor Deck
4. Metal Pan Stairs
5. Pipe and Tube Railings
6. Parapet Angle
7. Elevator Pit Grates
8. Structural Thermal Breaks
~~9. Interior Storefront System(s) steel~~

S. Provide submittals as indicated in the specifications.

T. Provide product data as indicated in the specifications.

U. Provide detailed plan for erection and delivery to site.

V. Provide all required temporary conditions necessary for staging/storing of steel and associated materials as identified in project documents.

W. Provide and install approved coverings to protect finishes of railings from damage during construction period. Removal by others.

X. Provide shop drawing submittal indication location and elevation for in wall blocking requirements for handrails.

Y. Removal of all temporary conditions and repairs to permanent conditions effected by placement of temporary supports.

Z. Perform review of connection points between cast-in-place concrete and this scope to confirm points are within required tolerances (elevation, spacing, and all other related controls). This shall occur prior to concrete pour(s).

AA. Provide column anchor bolt templates for use by cast-in-place concrete subcontractor to obtain layout conformity. A minimum of 2 templates per base plate style shall be fabricated and delivered to site. Material of templates shall be fabricated out of sheet metal (minimum 3/16" thick). Templates to be marked identifying which column baseplate it is associated with and project name.

BB. Provide and install of required miscellaneous steel and modifications to decking around MEP penetrations as outlined in the project documents. Includes coordination between this scope and MEP trades.

CC. All required sleeves, cores, box out and saw cutting will be indicated by on subcontractor's shop drawings for Structural Engineer's approval prior to placement or cutting holes.

DD. Subcontractor to provide and complete install of all required structural thermal breaks complete.

EE. Include all required cleaning of permanent materials that have become soiled prior to erection as defined in specifications.

FF. Provide all priming, painting, coatings, and touch-up of steel as identified in project documents.

GG. Provide temporary handrail system following OSHA requirements until permanent system is installed at curtainwalls, stairs, stair openings, MEP, shafts, and vertical ribbon windows. The handrail shall be constructed out of metal angle welded to structural steel and have and top and bottom cable running between each station. Include removal of temporary conditions and refurbishment to finish.

~~HH. Contract includes the furnish and install required for roof accessories scope including but not limited to the following items as shown on the project drawings and noted on project specifications:~~
~~1. Roof Hatches~~

II. Provide all priming, painting, coatings, and touch-up identified in project documents.

JJ. Include all required cleaning of permanent materials that have become soiled prior to erection as defined in specifications.

KK. Coordinate install with roofing subcontractor to confirm proper installation occurs between systems.

LL. Bearing plates and associated anchors/accessories are provided by this subcontractor. Coordinate with associated subcontractors for install of embedded components.

MM. Furnish and install all metal plates and angles at the top off all CMU walls as scheduled. This subcontractor to coordinate with the masonry subcontractor.

NN. Furnish and install the exterior screen wall steel.

OO. Include any costs associated with the visual, stand-alone mockup per 01 45 10.

PP.

1.4 EXCLUSIONS

A. The following items have been specifically excluded from this bid package:
1. Payment and performance bond.
2. Full time, non-working safety professional.

1.5 ALLOWANCES

1.6 DESIGN ALTERNATES:
1. Alternate #1: Site Aggregate Path Alternate.
2. Alternate #2: Playground Surfacing Alternate.
3. Alternate #3: Telescoping Stands and Retractable Audience Seating Alternate.
4. Alternate #4: Motor Operated Roller Shades Alternate.
5. Alternate #5: Area Rugs Alternate.

1.7 CONSTRUCTION ALTERNATES:

1. Alternate #1: Site Concrete
2. Alternate #2: Joint Sealants, Acoustical Sealants, Firestopping

1.8 UNIT PRICES

A. Current Labor Rates (do not include overhead and profit.

1.9 BREAKOUT PRICING:

A. 05 12 00 – Structural Steel Framing

B. 05 21 00 – Steel Joist Framing

C. 05 31 00 – Steel Decking

D. 05 50 00 – Metal Fabrications (Partial)

E. 05 51 00 – Metal Stairs

F. 05 52 15 – Aluminum Pipe and Tube Railings

G. 05 73 00 – Decorative Metal Railings

H. 06 10 53 – Miscellaneous Rough Carpentry (Partial)

I. 07 62 00 – Sheet Metal Flashing & Trim (Partial)

J. 07 72 00 – Roof Accessories (Partial)

K. Mockup

PRODUCTS (Not Used)

PART 2 - EXECUTION (Not Used)

END OF SECTION 01 00 00

EXHIBIT B – Bid Package 05 – GLASS & GLAZING AND METAL PANELS

PART 1 - GENERAL

1.1 PROJECT DRAWINGS & SPECIFICATION

A. Contract to include the following drawings for reference

Department of Administration, Public Works – Indiana State Archives Project No. 49020034-22-009-D1

1. For a full listing of drawings and specifications reference Exhibit A Drawings and Specifications Logs.
2. Scope Specific Specifications:
   1) 00 Procurement and Contracting Requirements
   2) 01 General Requirements
   3) 06 10 53 – Miscellaneous Rough Carpentry (Partial)
   4) 07 21 00 – Thermal Insulation (Partial)
   5) 07 42 13 – Formed Metal Wall Panels
   6) 07 42 43 – Metal Composite Material Wall Panels
   7) 07 62 00 – Sheet Metal Flashing & Trim (Partial)
   8) 07 92 00 – Joint Sealants (Partial)
   9) 08 41 13 – Aluminum-Framed Entrances and Storefronts
   10) 08 44 13 – Glazed Aluminum Curtainwalls
   ~~11) 08 45 23 – Fiberglass Sandwich Panel Assembly~~
   12) 08 71 00 – Door Hardware (Partial)
   13) 08 80 00 – Glazing
   14) 08 87 00 – Glazing Film
   15) 08 88 53 – Security Glazing

1.2 PROJECT SPECIFIC CLARIFICATIONS

A. See Attached Exhibit B.1.

1.3 SCOPE SPECIFIC CLARIFICATIONS

A. The following items are to be specifically included in this bid package:

1. Contractor to include all labor, materials, tools, equipment, and supervision necessary to complete the glass and glazing and metal panel scope of work.

2. All lifts shall maintain a diaper for duration of being onsite and be free of any fasteners in tires. Wheels shall be non-marking.

3. All layout associated with this scope of work has been considered and is included in the base bid. Control points or benchmarks to be established by Pepper Construction Company in coordination with the site utilities contractor

4. Schedule – A milestone schedule is included in the bid documents. Upon award, all contractors shall participate in a pull-planning meeting on site in which a detailed schedule showing interaction & coordination among all trades will be created & mutually agreed upon. The project manager and field supervisor responsible for each bid category should be present at each pull planning session.

5. Provide separate submittal/shop drawings for the building mockup. This will require an early, separate delivery of mockup material in advance of the building material. Any additional shipping/freight charges, mobilizations, equipment, etc. to erect the mockup are to be included in this bid.

6. Include all aluminum-framed entrances and storefronts complete. Include furnishing and installing all aluminum doors and hardware.

7. Base bid to include a complete curtainwall/storefront/entrance and metal panel installation. This includes but is not limited to; layout, field measuring openings, shop drawings and calculations, samples, shims, anchors, support/tie in to building structure, expansion anchors/clips and considerations, sealants, caulking, glazing, frit patterns/films, door hardware, testing, and a complete warranty as outlined in the construction documents.

8. Include delegated design submittal(s) with P.E. stamps as specified.

9. Submit detailed plan with tie-in plan to building structure with bid submission (embeds, anchors, supports, etc.). Curtain wall anchorage to building structure should be included in base bid, provide expansion and thermal requirements as required by construction documents.

10. Furnish and install all door lite glass located with steel doors.

11. Subcontractor to include all sealants required for complete, water-tight systems.

12. At curtainwall F and T anchors, notch the anchors 1”x1” at the bottom front of the anchor to allow for a continuous backer rod and sealant at the primary seal location. Applies to all head and sill locations.

13. At curtainwall, remove the curtainwall stem at all vertical mullions where flashing is glazed in. This allows the flashing to run continuously to the jambs.

14. Include all backpans as shown. At locations where firestop is in direct contact with the backpan, provide a galvanized back pan. Seal backpans to the mullions from the front side – all four sides.

15. Cap the top and bottom of all vertical mullions at all locations where there are no F or T anchors. The cap can be accomplished with a small rectangle of aluminum sealed down all four sides.

16. Provide all prefinished head/sill/jamb and corner flashings as shown in detail. Glazing subcontractor to coordinate size and location of prefinished flashing with adjacent work.

17. Subcontractor to include all curtain wall insulation. In locations with back pan, subcontractor to provide unfaced insulation.

18. Include and install complete flashing around openings included in this scope. Any trims identified as "trim to match CW finish" are to be furnished and installed in this scope of Work.

19. Include furnishing and installing all exterior and interior aluminum doors, hardware and accessories complete.

20. Include all glazing films and coatings in accordance with the project documents.

21. Subcontractor to include all interior door and frame lite glazing.

22. Furnish and install all sidelite glass located in hollow-metal frames.

23. Include all fire-rated door lite glass as indicated. Coordinate sizes with door supplier.

24. Subcontractor to furnish and install interior storefronts, aluminum doors and hardware complete.

25. Furnish and install all glazing films per the Documents.

26. Scope includes all door aluminum entrance door thresholds as shown in construction documents. Door thresholds should adhere to ADA standards.

27. Provide temporary doors with security hardware at all exterior storefront door openings if finished door hardware is not installed and functional at the end of the day.

28. Furnish and install all Div 08 aluminum brake metal flashings/trims per the Documents. Include any insulation behind Div. 8 brake metal locations similar to detail 3/A430.

29. Furnish and install the pressure plate with mullion cap (08 44 13-E) at the precast locations per the Documents. Reference detail 4/A430.

30. Furnish and install all outboard insulation and sub-framing systems behind all metal panel systems complete.

31. Furnish and install all manufactured roof facias (07 71 00-C).

32. Furnish and install metal panels and coping at the new exterior screen wall.

33. Furnish and install all Div. 07 brake metals associated with the metal panel system (i.e. 07 42 43-B). Include costs for any custom profiles or new dies that may be necessary to match the profiles in the Documents. For example, reference details 1 & 5/A430.

34. Include all testing as noted in contract specifications.

35. Provide cleaning prior to installation of all materials provided by this subcontractor that have any foreign materials on them.

36. Provide all accessories including but not limited to gasketing, anchors, concealed flashing, and Bituminous Paint.

37. Subcontractor to included installation of coatings or spacing materials to eliminate dissimilar metals, concrete, and masonry from creating galvanic action.

38. Include removal and disposal of all materials provided and installed for temporary utilization for mockups as specified in the project documents.

39. Provide required provisions to complete setting of tolerances in the following items but not limited to closures, hinges, thresholds, and all other provided items included in this subcontractor's scope.

40. Provide and complete field quality control testing as identified in project documents. Including all required equipment (lifts, hoses, gauges & etc.), labor, and supervision.

41. Coordinate with Pepper field staff when to complete removal of temporarily applied plastics and materials on frames and glazing. Ensure all surfaces are free of residues, adhesive, or other materials.

42. Provide and install all prefinished aluminum support brackets for curtainwall support back to structural steel. Sim. 4/A403. Paint to match mullions.

43. Provide and install any wood blocking and flashing similar to detail 8/A431 adjacent to precast.

44. Furnish and install the exterior screenwall metal panels.

45. The structural steel subcontractor will furnish and install the exterior screen wall tube steel. This subcontractor is responsible to furnish and install all other attachment steel, girts, etc. for the new metal panels and coping.

B. Include any costs associated with the visual, stand-alone mockup per 01 45 10.

C. Per 07 42 13/2.02 exposed-fastener lap-seam metal wall panels, provide custom color as selected by Architect to match composite wall panel.

D. Per 08 41 13/2.08, include custom Kynar paint finishes as scheduled.

E. Per 08 44 13/2.4, furnish and install pressure plate with mullion caps in a custom color to match soffit and exterior steel columns.

1.4 EXCLUSIONS

A. The following items are specifically excluded from this bid package:
   1. Premanufactured copings. By roofing subcontractor.

1.5 ALLOWANCES

A. Composite cleaning crew: All subcontractors provide a laborer, on a weekly basis, to compile a composite crew that will be utilized for construction cleaning at the sole direction of Peppers' superintendent. Subcontractors will only be required to provide an individual only during the time the subcontractor or tiered subcontractors are performing work onsite. This shall be figured at 8 hours per week.

1.6 DESIGN ALTERNATES:
   1. Alternate #1: Site Aggregate Path Alternate.
   2. Alternate #2: Playground Surfacing Alternate.
   3. Alternate #3: Telescoping Stands and Retractable Audience Seating Alternate.
   4. Alternate #4: Motor Operated Roller Shades Alternate.
   5. Alternate #5: Area Rugs Alternate.

1.7 CONSTRUCTION ALTERNATES:
   1. Alternate #1: Site Concrete
   2. Alternate #2: Joint Sealants, Acoustical Sealants, Fire Stopping

1.8 UNIT PRICES

A. Current Labor Rates (do not include overhead and profit).

1.8 BREAKOUTS:
A. 06 10 53 – Miscellaneous Rough Carpentry (Partial)
B. 07 21 00 – Thermal Insulation (Partial)

C. 07 42 13 – Formed Metal Wall Panels
D. 07 42 43 – Metal Composite Material Wall Panels
E. 07 62 00 – Sheet Metal Flashing & Trim (Partial)
F. 07 92 00 – Joint Sealants (Partial)
G. 08 41 13 – Aluminum-Framed Entrances and Storefronts
H. 08 44 13 – Glazed Aluminum Curtainwalls
~~I. 08 45 23 – Fiberglass-Sandwich Panel Assembly~~
J. 08 71 00 – Door Hardware (Partial)
K. 08 80 00 – Glazing
L. 08 87 00 – Glazing Film
M. 08 88 53 – Security Glazing
N. Mockup

PRODUCTS (Not Used)

PART 2 - EXECUTION (Not Used)

END OF SECTION 01 00 00

EXHIBIT B – Bid Package 06 – MEMBRANE ROOFING

PART 1 - GENERAL

1.1 PROJECT DRAWINGS & SPECIFICATION

A. Contract to include the following drawings for reference
Department of Administration, Public Works – Indiana State Archives Project No. 49020034-22-009-D1
1. For a full listing of drawings and specifications reference Exhibit A Drawings and Specifications Logs.
2. Scope Specific Specifications:
1) 00 Procurement and Contracting Requirements
2) 01 General Requirements
3) 06 10 53 – Miscellaneous Rough Carpentry (Partial)
4) 07 21 00 – Thermal Insulation (Partial)
5) 07 54 19 – Polyvinyl Chloride (PVC) Roofing
6) 07 62 00 – Sheet Metal Flashing & Trims (Partial)
7) 07 71 00 – Roof Specialties
8) 07 72 00 – Roof Accessories
9) 07 76 00 – Roof Pavers & Pedestals
10) 07 92 00 – Joint Sealants (Partial)

1.2 PROJECT SPECIFIC CLARIFICATIONS

A. See Attached Exhibit B.1.

1.3 SCOPE SPECIFIC CLARIFICATIONS

A. All lifts shall maintain a diaper for duration of being onsite and be free of any fasteners in tires. Wheels shall be non-marking.

B. All layout and engineering as required to complete the scopes including roofing, sheet metal flashing, and trim scopes of work. Layouts to be conducted by use of total station or equivalent system. Pepper to provide control points.

C. Include all required task temporary lighting as required for this scope of work.

D. Provide temporary protection, barriers, and flagging. This should include any barricades and signage. Plans to be coordinated with the Construction Manager before starting.

E. This contract includes all traffic control as necessary pertaining to subcontractors' scope of work.

F. It will be this contractors' responsibility to protect the existing paved areas, sidewalks, curbs, landscaped areas to remain from damage. Any damage to the roads caused by this subcontractor's

scope of work will need to be repaired at their expense. If damage is not repaired, then Pepper Construction will make necessary repairs and will back charge.

G. Include required mobilizations and demobilizations based upon provided project schedule.

H. Includes daylight work hours maintain schedule.

I. Placement of combustible fueled equipment to be coordinated with Pepper field supervision.

J. Prior to site mobilization provide written plan for review of proposed equipment utilized to load and remove materials from roof. Plan to be reviewed by Pepper Safety department.

K. Subcontractor has reviewed the project schedule and included all required temporary conditions to complete installation as defined by specifications.

L. Subcontractor to provide, install, and remove required temporary material to place over finished roof material for staging of materials. Temporary material to include of ¾" thick 4'x8 sheets of Southern yellow pine plywood with of 2" rigid foam board. Material shall be delivered to site trapped. Coordinate location of material with Pepper field superintendent.

M. Subcontractor to provide and install a temporary roof utilizing EPDM material. Weigh down with pavers and/or screw down as necessary.

N. Prior to substantial completion coordinate with Pepper Construction to provide a final clean of roof system.

O. Provide and deliver to site required spare parts for owner's attic stock. Ensure all items are counted and a transmittal is provided with each delivery. Coordinate with Pepper.

P. Subcontractor acknowledges Site Logistics plan included in bidding documents and will utilize this plan as a reference for what is intended and expected from Pepper Construction. Subcontractor is given authority to make minor adjustments, with prior approval from Pepper superintendent to the site logistics plan where means of efficiency for the project can be achieved. Subcontractor acknowledges that if the plan is adjusted, and the result of the adjustment increases the scope of work for either Pepper or any other subcontractor onsite, subcontractor is subject to a back charge as may be required.

Q. Subcontractor shall provide all required safety carts for tie off when working on roof.

R. Subcontractor to provide and maintain required equipment and certified operator to hoist material to roof.

S. Subcontractor to include all labor, materials, tools, equipment, and supervision necessary to complete the roofing scope of work.

T. Contract includes the furnish and install required for roof and flashing scope including but not limited to the following items as shown on the project drawings and noted on project specifications:
   1. Roofing Membranes
   2. Roof Insulations
   3. Vapor Barrier

4. Pre-Molded Units Around Penetrations
5. Flashing
6. Trims
7. Gutters and Downspouts
8. Metal Termination Bars & Battens
9. Roof-edge Fascia
10. Copings
11. Walkways

U. Provide submittals as indicated in the specifications.

V. Provide product data as indicated in the specifications.

W. Provide all required temporary conditions necessary for staging/storing of materials as identified in project documents.

X. Include all required cleaning of permanent materials that have become soiled prior to erection as defined in specifications.

Y. Complete counter flashing, PVC roofing system, and accessories to complete a thermal tight and watertight seal around roof hatch.

Z. At penetrations through roof including but not limited to roof drains, duct, pipe, fall protection anchors provide all required pre-molded seals, clamps, flashing, trim, membrane, mastics/sealants, and insulation to uniformly to complete roofing system.

AA. Complete install of roofing system with proper slopes and elevation changes as defined by project documents.

BB. Prior to ordering of any manufactured pre-molded units coordinate sizing with other subcontractors approved shop drawings.

CC. Complete required preparations including but not limited to cleaning substrates, installing temporary covers over existing items such as vents and drains from becoming clogged. Removal of temporary conditions to occur after roofing scope is completed.

DD. Complete testing of roof system to confirm slopes and drain patterns do not allow for ponding. Include hoses/fittings, labor, and supervision to perform test and required clean-up.

EE. Contract includes the furnish and install required for joint sealants for this scope of work.

FF. Provide submittals as indicated in the specifications.

GG. Provide product data as indicated in the specifications.
1. Provide and complete joint sealants as it relates to this subcontractor's scope including but not limited to flashing, trims, and roofing materials (PVC & penetrations through system). In locations where other trades materials meet up with this subcontractor's scope of work, it shall always be this subcontractor's responsibility to complete the Joint Sealant.

HH. Subcontractor to furnish and install roof hatch. Roofing subcontractor to provide and install all blocking, trims (interior & exterior), flashing, and roof hatch system complete.

II. Include any costs associated with the visual, stand-alone mockup per 01 45 10.

JJ. Provide separate submittal/shop drawings for the building mockup. This will require an early, separate delivery of mockup material in advance of the building material. Any additional shipping/freight charges, mobilizations, equipment, etc. to erect the mockup are to be included in this bid.

KK. Per specification section 07 71 00, this subcontractor is responsible to furnish and install all manufactured copings, drip edges, gravel stops, roof fascias, and counterflashing systems. Per section 2.05 copings to be a custom color.

LL. Reference RFI #110, this subcontractor is responsible to install the SIKA roof vapor retarder on the roof deck.

1.4 EXCLUSIONS

A. The following items have been specifically excluded from this bid package:
1. Payment and performance bond.
2. Dumpsters
3. Firestopping
4. Parapet wood blocking

1.5 ALLOWANCES

A. Composite cleaning crew: All subcontractors provide a laborer, on a weekly basis, to compile a composite crew that will be utilized for construction cleaning at the sole direction of Peppers' superintendent. Subcontractors will only be required to provide an individual only during the time the subcontractor or tiered subcontractors are performing work onsite. This shall be figured at 8 hours per week.

B. Include a $25,000 allowance for miscellaneous roofing work. Allowance work must be preapproved by Pepper prior to proceeding.

1.6 DESIGN ALTERNATES:
1. Alternate #1: Site Aggregate Path Alternate.
2. Alternate #2: Playground Surfacing Alternate.
3. Alternate #3: Telescoping Stands and Retractable Audience Seating Alternate.
4. Alternate #4: Motor Operated Roller Shades Alternate.
5. Alternate #5: Area Rugs Alternate.

1.7 CONSTRUCTION ALTERNATES:
1. Alternate #1: Site Concrete
2. Alternate #2: Joint Sealants, Acoustical Sealants, Firestopping

1.8 UNIT PRICES

A. Current Labor Rates (do not include overhead and profit).

1.9 BREAKOUTS

A. 06 10 53 – Miscellaneous Rough Carpentry (Partial)

B. 07 21 00 – Thermal Insulation (Partial)

C. 07 54 19 – Polyvinyl Chloride (PVC) Roofing

D. 07 62 00 – Sheet Metal Flashing & Trims (Partial)

E. 07 71 00 – Roof Specialties

F. 07 72 00 – Roof Accessories

G. 07 76 00 – Roof Pavers & Pedestals

H. 07 92 00 – Joint Sealants (Partial)

I. Mockup

PRODUCTS (Not Used)

PART 2 - EXECUTION (Not Used)

END OF SECTION 01 00 00

EXHIBIT B – Bid Package 07 – Joint Sealants, Firestopping, Damproofing and Waterproofing, and Air Barriers

1.1 PROJECT DRAWINGS & SPECIFICATION

A. Contract to include the following drawings for reference:
Bartholomew Consolidated School Corporation – New Elementary #12 – Maple Grove:
1. For a full listing of drawings and specifications reference Exhibit A Drawings and Specifications Logs.
2. Scope Specific Specifications:
1) 00 Procurement and Contracting Requirements
2) 01 General Requirements
3) 07 13 26 Self-Adhering Sheet Waterproofing
4) 07 21 00 Thermal Insulation (Partial)
5) 07 27 26 Fluid-Applied Membrane Air Barriers
6) 07 62 00 Sheet Metal Flashing and Trim (Partial)
7) 07 84 13 Penetration Firestopping
8) 07 84 46 Fire-Resistive Joint Systems
9) 07 92 00 Joint Sealants (Partial)
10) 26 05 00 Common Work Results For Electrical (Partial)

1.2 PROJECT SPECIFIC CLARIFICATION

A. See attached Exhibit B.1

SCOPE SPECIFIC CLARIFICATIONS

1.3 Joint Sealants

A. Furnish and install industrial joint filler (option 1 OR option2) at all control joints and construction joints in slabs on grade. If flexible epoxy joint filler option is selected (option 1), subcontractor must adhere to installation timeframe requirements and post occupancy return and infill as outline in the specifications.

B. All metal flashing seams, laps, penetrations, etc. noted in the project documents to be sealed are by each subcontractor installing the flashing and are not included in this scope of work. Reference (04 22 00, 3.10, B., 4.) for example.

C. This scope of work includes all joint sealants at masonry required by the project documents.

D. Exterior expansion joint covers are included in this scope of work. This scope includes furnishing and installing a complete expansion joint cover system including but not limited to: mockup, cover, anchors, accessories, moisture barriers, etc.

E. Joint sealants at window roller shades are included as part of this scope of work.

F. Non-integral joint sealants at metal casework and countertop fixtures are included as part of this scope of work.

G. Subcontractor to furnish and install all components required as part of this specification section to supply a complete scope unless explicitly indicated otherwise in this scope of work. This includes all interior and exterior joint sealants unless specifically noted to be excluded.

H. Proper cleaning, priming, and other preparation of joint substrates for proper sealant applications and protection of adjacent surfaces during installation to prevent staining or damage to adjacent surfaces is included in this subcontract.

I. Compatibility and paint ability of products considered in each application where applicable.

J. Provide "WET CAULK" signage anywhere caulking is being completed and remove signage once caulking is cured to the touch.

K. Furnish and install complete systems including spray foam, backer rod, sealant, etc. at all sealant joint locations in the project documents except for joints touching precast panels and exterior stone veneer panels. Precast-to-precast joints and precast to other substrate joints will be furnished and installed by BC-03 Precast subcontractor.

L. Joint sealants at hollow metal frames are included as part of this scope of work. This includes sides, head, and base of frame at all solid surface locations. Frames are not caulked at carpeted locations.

M. Joint sealants at access door frames are included in this scope of work.

N. Primary and secondary exterior sealant joints at aluminum framed entrances, storefronts, curtainwalls, and punched openings are by BC-05 subcontractor. All other sealant joints at these locations are included to be furnished and installed as part of this scope of work (interior joints from glazing system to adjacent wall systems for example).

O. Joint sealants at integrated exterior mockups are included in this scope of work.

P. All testing and any required observation of tests, recording of tests, and reporting of tests required in the project documents for joint sealants furnished and installed by the BC-07 Joint Sealants subcontractor are included in this subcontract.

Q. Furnish and install all sealant joints for plumbing fixtures.

R. Furnish and install all sealant joints for drinking fountains and water coolers.

S. Furnish and install all joint filler at concrete paving per the project documents. This includes joint filler at isolation joints.

T. Furnish and install all sealant joints, backer material, primers, etc. for a complete system at all concrete paving joint sealant locations.

U. Subcontractor to ensure during installation of joint sealant at counter tops and backsplashes sealant is installed wide enough as to not crack i.e. larger than a 1/16" to allow for expansion and contraction. Failure to complete in this manor will result in removal and replacement.

V. Sealant at substrate connections for panel signage furnished and installed as a part of this subcontract.

1.4 Firestopping

A. Subcontractor to include all labor, materials, tools, equipment, and supervision necessary to complete the fire stopping.

B. Subcontractor to provide and complete coordination with all trades work creating a penetration as identified in the project documents and codes as identified to be fire stopped (i.e., fire walls, fire barrier walls, smoke-barrier walls, and fire partitions, shafts, floor penetrations, and etc.). Subcontractor to provide and complete fire stopping at all identified locations complete.

C. Subcontractor to include Hilti CFS-BL Firestop Blocks for floor penetrations that due to sizing of penetration in comparison to MEP system going through floor cannot be "stuffed and sprayed".

D. Subcontractor to provide and complete install of all the required accessories but not limited to slag-wool-fiber insulation, rock-wool-fiber insulation, sealants, fire-rated form board, fillers for sealants, temp. forming materials, primers, collars, and Hilti sleeves.

E. Subcontractor is responsible for obtaining all required EJs and formally submitting through prior to installation of a system that does not fall under "standard" details.

F. Subcontractor to provide and install required amount of filler materials based upon the project documents. Filler materials to include all of the following items but not limited to cast-in-place firestop devices, latex sealants, firestop devices, intumescent composite sheets, intumescent putties, intumescent wrap strips, mortars, pillows/bags, silicone foams, and silicone sealants.

G. Subcontractor to provide and complete required preparations called out in project documents and in accordance with product requirements. This shall include but not limited to cleaning of openings, priming, and taping of surfaces not to receive fire stopping.

H. Subcontractor is responsible for all fire stopping requirements at curtain wall, storefront, and perimeter of wall systems.

I. Subcontractor will be required to perform a first in-place review with Pepper Quality team of fire stopping at head of wall and vertical wall section. This review must be completed prior to proceeding past the first 25'-0" LF. Upon review subcontractor will be responsible for correcting all identified issues. Once corrections are made Pepper Quality shall be called back out to review. Upon all items being addressed and corrections approved subcontractor shall be held to match rest of project install to meet / exceed this first in-place installation. Failure will result in removal and replacement of areas not meeting requirements at no additional cost to project.

J. Subcontractor to complete set up and removal of all required temporary conditions to ensure excess fire stopping, fire proofing, and other systems materials do not go on other trades installed

materials. Failure to protect other systems from damage or being coated from installation of fire stopping or other system will result in subcontractor being formally back charged to have effected trades correct or clean.

K. Provide and complete install of labeling at each penetration as identified in the project documents. This includes but is not limited to stenciling of rated wall systems and labeling of penetrations and rated assemblies.

L. Subcontractor is responsible for supply and install of any “putty pads” for systems in walls where applicable.

1.5 Damproofing & Waterproofing

A. Subcontractor has reviewed project schedule and included all required temporary conditions to complete this scope of work during the time of year indicated and has included in proposal appropriate materials that can be placed on concrete within 72 hours of pouring concrete (not weeks) and can be installed down to 20 degrees.

B. It will be this subcontractors' responsibility to protect the existing paved areas, sidewalks, curbs, landscaped areas to remain from damage. Any damage to the roads caused by this subcontractor's scope of work will need to be repaired at their expense. If damage is not repaired, then Pepper Construction will make necessary repairs and will back charge.

C. Subcontractor to in addition of coating exterior side of elevator pits to also include coating of Masterseal 581 cementitious coating of pit walls, floor, and sump area. Subcontractor to include general clean and prep of pit

D. Subcontractor to provide all required temporary ventilation as required for the install of scope.

E. Contract includes the furnish and install required for cold fluid-applied waterproofing scope including but not limited to the following items as shown on the project drawings and noted on project specifications:
   1. Protection Course
   2. Waterproofing
   3. Drainage Panels
   4. Temporary Protection

F. Provide submittals as indicated in the specifications.

G. Provide record drawings as indicated in the specifications.

H. Provide product data as indicated in the specifications.

I. Provide and complete providing of waterproofing accessories including all of the following but not limited to primer, flashing, membrane-reinforcing fabric, joint reinforcing strip, joint sealant, and backer rod.

J. Provide and complete waterproofing for all areas and applications identified in the project documents.

K. Provide and complete preparation including all of the following but not limited to cleaning, masking off and providing temporary coverage for in place materials in the surrounding area, and removal and patching of substrates (per project documents and manufactures requirements).

L. Subcontractor to provide all required coordination with concrete/masonry subcontractor for install of materials prior to back fill occurring.

M. Subcontract includes the furnish and install required for thermal insulation scope including but not limited to the following items as shown on the project drawings and noted on project specifications:
   1. Foundation Wall Insulation

N. Provide and complete install of required foundation wall insulation as identified in the project documents.

O. Contract includes the furnish and install required for fluid-applied membrane air barrier scope including but not limited to the following items as shown on the project drawings and noted on project specifications:
   1. Air-Barrier System
   2. Patching Existing Conditions
   3. Terminations & Transitions
   4. Temporary Protection

P. Provide and complete all the following accessories but not limited to primers, transition/termination strips, joint reinforcing fabric and strips, joint sealants, counterflashing strips, flashing sheets and metal termination bars, termination mastic, substrate patching, adhesives, tapes, foam sealants, and lap sealants.

Q. Subcontractor to provide and complete coordination with other trades scopes penetrating through air barrier to ensure all locations are properly sealed according to project documents and material manufactures requirements. Subcontractor to complete install of barrier around these penetrations to incorporate them into the system.

R. Subcontractor to ensure that all materials are secured and during backfill process, any materials not properly supported or fully adhered will need to be repaired or replaced by this subcontractor at no additional cost to the project.

1.6 EXCLUSIONS

A. The following items have been specifically excluded from this bid package:
   1. Payment and performance bond.
   2. Full time, non-working safety professional.
   3. Precast panel joints in their entirety (spray foam, backer rod, sealant, etc.). This includes precast-to-precast joints and precast to other substrate joints.

1.7 ALLOWANCES

*Allowance funding may be removed by Pepper Construction at any point within the project at the sole discretion of Pepper Construction. Funds that have already been agreed to and have been spent from an allowance are no longer subject to removal.

A. Composite cleaning crew: All subcontractors provide a laborer, on a weekly basis, to compile a composite crew that will be utilized for construction cleaning at the sole direction of Peppers' superintendent. Subcontractors will only be required to provide an individual only during the time the subcontractor or tiered subcontractors are performing work onsite. This shall be figured at 8 hours per week.

B. Provide $15,000.00 allowance for additional joint sealants above and beyond those identified.

1.8 DESIGN ALTERNATES

1. Alternate #1: Site Aggregate Path Alternate.
2. Alternate #2: Playground Surfacing Alternate.
3. Alternate #3: Telescoping Stands and Retractable Audience Seating Alternate.
4. Alternate #4: Motor Operated Roller Shades Alternate.
5. Alternate #5: Area Rugs Alternate.

1.9 CONSTRUCTION ALTERNATES

1. Alternate #1: Site Concrete
2. Alternate #2: Joint Sealants, Acoustical Sealants, Firestopping

1.10 UNIT PRICES

A. Current labor rates provided at time of bid. Updated rates to be provided each year/at time of updates.

1.11 POST AWARD NOTES

A. None.

PRODUCTS (Not Used)

PART 2 - EXECUTION (Not Used)

END OF SECTION 01 00 00

EXHIBIT B – Bid Package 08 – Elevators

PART 1 - GENERAL

1.1 PROJECT DRAWINGS & SPECIFICATION

A. Contract to include the following drawings for reference.

Department of Administration, Public Works – Indiana State Archives Project No. 49020034-22-009-D1

1. For full listing of drawings and specifications reference Exhibit A Drawings and Specifications Logs.
2. Scope Specific Specifications:
   1) 00 Procurement and Contracting Requirements
   2) 01 General Requirements
   3) 14 24 00 – Hydraulic Elevators

1.2 PROJECT SPECIFIC CLARIFICATIONS

A. Each subcontractor will have 10 business days after receiving the subcontract to review, sign off, and return to Pepper. Failure to complete this process in the allotted time frame will result in the termination of this subcontract. At that time Pepper will begin interviewing the next low bidder for this bid package.

B. The subcontractor will follow the project schedule timeline for execution of submittals. Failure to complete submittals per the project schedule will be grounds for withholding all payments.

C. Subcontractor to review and confirm with vendors and manufacturers during supply of submittals that no products being submitted on are being discontinued within the next year. Additionally, subcontractor to confirm and provide on submittal current lead times.

D. All substitution requests must follow formal procedures in spec section 00 26 00. No deviation from this section will be accepted.

E. Each subcontractor has the responsibility to immediately examine the contract documents for errors, inconsistencies, or omissions. Any such errors, inconsistencies or omissions shall immediately be brought to the attention of Pepper Construction Company.

F. Care will be taken by each subcontractor to provide exemplary workmanship. Work that is sloppy, and work that is not installed in a neat, workmanlike manner, will be rejected by Pepper, and will be re-worked at the subcontractor's expense.

G. The Schedule of Values submitted as part of this bid must break out all allowances as separate line items.

H. Subcontractor superintendents/lead foreman and project managers are required to have a paid subscription to PlanGrid for the duration of the project. All current drawings, specifications, RFIs, submittals, and reports will be coordinated through the PlanGrid program. If the subcontractor

does not comply a deduct of $4,000.00 will be accessed to the subcontractor in the form of a formal change order. The subcontractor must have this in place prior to first pay application being approved in the form of a receipt.

I. Superintendents/lead foreman are required to have an IPad or equivalent tablet in order to participate in punch lists and as-builts onsite through PlanGrid. If the subcontractor does not comply a deduct of $2,000.00 will be accessed to the subcontractor in the form of a formal change order. No exception or deviations will be accepted.

J. All subcontractor employees and tiered subcontractors performing work onsite will be required to go through a site specific safety orientation prior to gaining access to the site. This orientation will be held 5 days a week Monday through Friday through the duration of the project. Orientation will begin at 7:30am and last no longer than 1 hour. Individuals will only be required to complete orientation once during the duration of the project. At the completion of the training individuals will receive a numbered site-specific decal that must be worn on their hard hat.

K. Site hours of operation will be 7:00am to 5:00pm, Monday through Friday. Subcontractors required to work weekends to maintain project schedule or formally requested to perform work on the weekends or off hours will be handled on an individual basis.

L. Subcontract includes daylight work hours and 2nd shift as required to maintain project schedule. Each subcontractor will provide resources to properly fulfill their schedule requirements. Any premium time needed to maintain their commitment will be at the subcontractor's expense.

M. Tobacco (smoking and or vape and chewing tobacco) are not permitted on the Property (including but not limited to jobsite, IDOA parking garage, and flat lot(s) staging areas. Subcontractor employees caught in violation will be removed from the site immediately for the day on the first offence and on the second offence removed from the project permanently for the remainder of the project.

N. Project parking will be at the Indiana Government Center North Garage (address 220 N. Senate Ave., Indianapolis, Indiana 46202). Parking will be on the roof deck level only (this does not include the ramp section). Subcontractors will receive a numbered subcontractor badge to gain access in and out of the garage. Subcontractors will be required to turn in their parking badge at any point in time on the project when they will not be back onsite within the next business days. Subcontractors who do not turn in their badge within the allotted time frame will be charged $100.00 per badge in the form of a formal deductive change order.

O. The subcontractor has reviewed and agrees to safety requirements in the safety handbook and upon signing off of the subcontract are required to submit project specific safety plan.

P. The Subcontractor is to include all labor, material, tools, equipment, supervision necessary to complete fully this scope of work for the Indiana State Archives project.

Q. The subcontractor has reviewed all quality requirements, signed off on the quality agreement, and submitted a project specific quality plan. All these items must be submitted and approved prior to approval of the first pay application.

R. All quality items must be completed or responded to within 5 business days. (Must have photo documentation of repair/issue) Failure to complete this process in the designated time frame will result in any current payments being withheld until completed.

S. Preinstallation Meeting: Pepper will lead a preinstallation meeting with each Trade Partner prior to starting work. The Trade Partner Project Manager and Foreman (on site) is required to attend this meeting. During this meeting, the team reviews the scope of work, submittals, plans, specifications, manufacturer's requirements, Trade Partner Quality Plan, and lessons learned as applicable. Note that the sub, preinstallation meeting is by scope, not necessarily trade partner (some trade partners will have multiple preinstallation meetings). Preinstallation meetings last approximately one to three hours depending on the complexity of the scope of work. Subcontractors may be required to attend additional preinstallation meetings with affected/associated scopes as outlined in the project specifications.

T. Trade Partners that repeat issues or otherwise demonstrate a lack of expertise or understanding, will be required to participate in any training deemed necessary by Pepper's Director of Quality Management to bring the Trade Partner expertise to a level that will enable them to comply.

U. Labor rate escalation is included with subcontractors base bid for the duration of the project as determined by the project schedule. The subcontractor must provide current labor rates and bid time that do not include any mark up or overhead. For duration of project updated labor rates for any additional or deduction of work must be provided to Pepper to keep on file.

V. All change orders must be presented utilizing the provided form. All change orders presented that do not utilize this form will be rejected and sent back to the subcontractor to correct.

W. All pay application requests must include an updated change order log (standard form will be provided by Pepper Construction). Failure to record all costs on the change order log at time of submission by subcontractor will be accepted as formal notification to Pepper Construction, Owner, and Design Team all items have been accounted. No backdated tickets or change orders will be accepted.

X. Each subcontractor has the responsibility to immediately examine the contract documents for errors, inconsistencies, or omissions. Any such errors, inconsistencies or omissions shall immediately be brought to the attention of Pepper Construction.

Y. All costs (addition or deduction) related to ASIs or RFIs must be formally submitted within 10 business days of formal notification to subcontractors sent out by Pepper Construction. Failure to submit associated costs within this time frame will be considered legal confirmation that there are no cost impacts to the subcontractor.

Z. Include multiple mobilizations and demobilizations to the jobsite as required to meet the provided project schedule included in the bid package.

AA. Subcontractor pricing is to include all work that is inferable from the drawings and specifications. All questions shall be submitted prior to bid day. Submission of bid is considered formal acceptance and no future change order will be issued for any gaps.

BB. The subcontractor acknowledges and agrees that there is limited staging and storage space for the project. The subcontractor will deliver material and equipment only on an as needed basis. All deliveries will be coordinated with Pepper Constructions field staff.

CC. The project is sales tax exempt. All subcontractors should exclude sales tax in their base bid and from any future change orders. Sales tax exemption information can be found in 00 72 16 General Sales Tax Exemption Certificate.

DD. Subcontractors shall provide all required insurances including General Liability (GL).

EE. Cyber and pollution insurance per project documents must be provided by the subcontractor with no exceptions taken. No waivers will be accepted.

FF. The subcontractor is responsible for reviewing delivery logistics and sizing of trucks for deliveries. Deliveries that occur outside of project designated hours unless coordinated ahead of time will be refused until project is next open.

GG. The subcontractor acknowledges Site Logistics plan included in bidding documents and will utilize this plan as a reference for what is intended and expected from Pepper Construction. The subcontractor is given authority to make minor adjustments, with prior approval from Pepper superintendent to the site logistics plan where means of efficiency for the project can be achieved. Subcontractor acknowledges that if the plan is adjusted, and the result of the adjustment increases the scope of work for either Pepper or any other subcontractor onsite, subcontractor is subject to a back charge as may be required.

HH. Each subcontractor is responsible for their material and equipment. Any damages or loss of material or equipment will not be reimbursed by the project. If another subcontractor causes damage or loss a formal ticket must be issued and signed by both subcontractors. Upon completion of this step Pepper will issue formal change orders to associated subcontractor(s).

II. Failure to protect staged materials and in place work following project document requirements and this scope sheet will result in subcontractors' responsibility to replace at no cost to the project.

JJ. All staging of equipment unless specifically called out in project documents must be stored off site.

KK. Each subcontractor is responsible for portable units (trash cans, tippy dumpsters, etc.) for waste and transporting of these items to project provided trash and recycle dumpsters. (Pepper policy is nothing hits the floor)

LL. The subcontractor is required to complete all layout and engineering as required to complete the scope. Layouts to be conducted by use of total station or equivalent system. Pepper to provide control points (three locations onsite and 2 locations per each level of building structure).

MM. Subcontractor includes all traffic control as necessary pertaining to subcontractors' scope of work.

NN. It will be this subcontractors' responsibility to protect the existing paved areas, sidewalks, curbs, landscaped areas to remain from damage. Any damage to the roads caused by this subcontractor's scope of work will need to be repaired at their expense. If damage is not repaired, then Pepper Construction will make necessary repairs and will back charge. (Subcontractors responsibility to clean all roadways/sidewalks/paved areas associated with their work as daily or as directed by Pepper superintendent.)

OO. Subcontractor to provide all dust control measures (i.e., excavation activities, demo, drywall finishing, drilling, etc.) related to this Scope of Work.

PP. BIM PCCI Trade Coordination Protocol Document has been included in the project manual and necessary provisions and cost are to be covered by subcontractor.

QQ. Provide and deliver to site required spare parts for owner's attic stock. Ensure all items are counted and a transmittal is provided with each delivery. Coordinate with Pepper. Final payment will not be provided until all items are turned over.

RR. All materials are to be elevated on dunnage and covered during storage. Includes maintenance of both dunnage and covers.

SS. Be present and unload, including equipment, dunnage, and labor, off-load all materials associated with this scope of work. Gates must be closed and re-secure after each vehicle entering and leaving the site. Failure to adhere to this requirement may result in back charges at Pepper's discretion.

TT. The above and following scope of work is intended to be general in nature. The intention is to have the successful subcontractor perform all related work shown on the contract documents other than those items specifically indicated below to be excluded. Should the documents disagree in themselves, or with each other, the scope of work shall be based on the most expensive combination of quality and quantity of work indicated.

UU. Provide verification/acceptance of existing conditions prior to work starting. Starting work is understood as acceptance of existing conditions/substrate.

VV. All operators must be certified. Provide all certifications for on-site operators prior to individual arriving on site.

WW. Include any task specific temporary lighting required for this scope of work based on schedule and jobsite hours.

XX. Provide all testing required per the project specifications related to this scope of work unless explicitly noted as owner testing.

1.3 SCOPE SPECIFIC CLARIFICATIONS

A. All lifts shall maintain a diaper for duration of being onsite and be free of any fasteners in tires. Wheels shall be non-marking.

B. Upon completion of drywall hanging on each floor lifts will be required to be removed from that floor for the duration of the project. From that point moving forward for remainder of project subcontractors must only utilize ladders and scaffold systems.

C. Placement of required equipment to be coordinated with Pepper field supervision.

D. BIM PCCI Trade Coordination Protocol Document (00 72 15) has been included in the project manual and necessary provisions and cost are included in this scope.

E. Provide and deliver to site required spare parts for owner's attic stock. Ensure all items are counted and a transmittal is provided with each delivery. Coordinate with Pepper.

F. Provide shop drawings within 10 working days of award notification showing proper location of any embedded steel for shaft constructions, including for hoist beam.

G. Any in-wall rough in information for buttons/notification lights/etc. to be included in shop drawing submittal.

H. Provide embeds and embed drawings within 10 working days of award notification. If not provided, it is the responsibility of this subcontractor to drill and epoxy anchors required for this scope of work. Turn over embeds for install by BP-02A Concrete Structure subcontractor. Include coordination with installing contractor to ensure proper locations/depths/etc. are achieved. Hoist beam embeds by others, all other embeds for elevator/elevator equipment by BP-08.

I. Subcontractor is responsible for completing all necessary drawings, permit application forms, local jurisdiction inspection coordination, on site personnel for inspections/testing, and any inspection/permitting/plan review fees required for this scope of work.

J. All required sleeves, cores, boxouts, and saw cutting will be indicated on the shop drawings for structural engineer's review prior to placement or cutting.

K. Provide all temporary barricades at each elevator opening. Removal when complete to be included by this contractor.

L. Provide screening inside the shaft to protect any objects from falling above while your work is being completed prior to cab installation.

M. Provide an operator to run the car to allow others to complete firestopping work within the elevator shaft.

N. Provide all platforms required to complete this scope of work.

O. All safety guardrails to be removed and replaced daily. Barricade off area while safety rails are down.

P. Perform all final adjustments.

Q. Provide all factory authorized start up as specified.

R. Provide maintenance service as indicated in the Documents.

S. Include all required signage including inside the cars and at each landing.

T. Elevator subcontractor to set sills at doors. BP-02B Building Masonry subcontractor to complete grout in sills after set.

U. Elevator subcontractor to coordinate locations of other trades work in shaft. This coordination is included in this contract.

V. BP-11A Electrical subcontractor will provide fire alarm wiring to elevator controller. BP-08 Elevator subcontractor to land wiring in control panel.

W. Provide and complete all identified finishes complete as identified in the project specifications including but not limited to front walls, car fixtures, reveals, door sills, ceilings, handrails, floor prep, wall panels, ventilation fan, signal equipment, and hall annunciator.

X. Progress and final testing and inspections required by the contract documents and Governmental Authorities having jurisdiction. Personnel are included as required to be onsite during all inspections and testing this includes having proper trade personnel onsite to operate the elevator.

Y. Pit ladder to be provided and installed by BP-08 elevator subcontractor.

Z. Elevator rails provided and installed by BP-08 elevator subcontractor.

AA. Steel shapes for supporting elevator door sills (and any required anchors/accessories/etc.) to be furnished and installed as part of this subcontract (1.2, A, 8).

BB. Elevator pit ladders and any associated accessories to be furnished and installed as part of this subcontract (1.2, A, 11).

CC. Hoist beam and embeds for hoist beams are furnished and installed by others. Coordination and information for hoist beam to be supplied as part of the submittal package as outlined previously in this subcontract.

DD. Embeds for elevator equipment including attachment plates, angle brackets, etc. for supporting guiderails and any other embeds required except for the hoist beam are to be furnished as part of this subcontract and turned over to BP-02A Concrete Structure subcontractor.

EE. Subcontractor to furnish and install all components required as part of this specification section along with any necessary removal associated to supply a complete scope unless explicitly indicated otherwise in this scope of work.

FF. Provide continuing maintenance proposal in the form of a standard one-year maintenance agreement, starting on the date that initial maintenance service is concluded. This is in addition to one year maintenance service outlined in the specifications that are included in this subcontract.

GG. Furnish all inserts, sleeves, block outs, elevator equipment with integral anchors, and other items embedded in concrete for elevator equipment to be installed by Concrete Structure subcontractor. Coordinate install and turnover of said items with Concrete Structure subcontractor.

HH. Coordinate locations and dimensions of work specified in other sections that relate to Elevators including but not limited to: sumps, floor drains in pits, entrance subsills, hoist beams, electrical service, outlets, lights, and switches in hoist ways and pits.

II. Car flooring furnished and installed by others. Car substrate properly prepped to receive resilient flooring called out in the project documents as part of this subcontract.

JJ. Provide mounted inspection certificate in each car.

KK. Provide hooks for protective pads and one complete set of full height protective pads for each cab with hooks.

LL. Include necessary provisions for elevators to be tied to emergency/backup/standby power. Electrical subcontractor to bring power to local panel/junction box. Final termination to elevator panel/system to be included as part of this subcontract.

MM. Owner training and operation checks as outlined in the specifications are included as part of this subcontract.

NN. Include in your bid material, labor and equipment costs to meet the project schedule. No additional costs will be given for material escalation, labor burden increases, commodity increases, etc.

1.4 EXCLUSIONS

A. The following items have been specifically excluded from this bid package:
   1. Payment and performance bond.
   2. Full time, non-working safety professional.
   3. Finish flooring in elevator car.

1.5 ALLOWANCES

A. All allowances shall only be approved for use or deduction from subcontract by Pepper Construction through written notice. At the end or anytime at Pepper Constructions discretion any and all unused allowances can be deducted from the subcontract through a formal change order.

1.6 ALTERNATES
   1. Alternate #1:

1.7 UNIT PRICES

A. Current Labor Rates (do not include overhead and profit).

B. Equipment Rates

1.8 BREAKOUTS

A. Provide associated alternate/credit if onsite lull would be provided by the project and not carried by this subcontractor. Lull to be operated by Pepper and subcontractor responsible for rigging, spotter, and unloading. Project provided lull would be a 10k unit.

PRODUCTS (Not Used)

PART 2 - EXECUTION (Not Used)

END OF SECTION 01 00 00

EXHIBIT B – Bid Package 09 – Plumbing

PART 1 - GENERAL

1.1 PROJECT DRAWINGS & SPECIFICATION

A. Contract to include the following drawings for reference.
   1. For a full listing of drawings and specifications reference Exhibit A Drawings and Specifications Logs.
   2. Scope Specific Specifications:
      1) 00 Procurement and Contracting Requirements
      2) 01 General Requirements
      3) 05 50 00 – Metal Fabrications (Partial)
      4) 08 31 13 – Access Doors (Supply Only)
      5) 11 30 13 – Residential Appliances
      6) 11 40 00 – Foodservice Equipment
      7) 12 32 16 – Manufactured Plastic-Laminate- Faced Casework (Partial)
      8) 12 36 61 – Solid Surface Countertops (Partial)
      9) 20 00 10 – Common Work Results for Fire Suppression, Plumbing and HVAC
      10) 20 00 50 – Common Materials and Methods for Fire Suppression, Plumbing and HVAC
      11) 20 00 60 – Common Pipe, Valves, Fittings and Hangers for Fire Suppression, Plumbing and HVAC
      12) 20 01 80 Common Insulation for Plumbing and HVAC
      13) Division 22 Plumbing

1.2 PROJECT SPECIFIC CLARIFICATIONS

A. See attached exhibit B.1

1.3 SCOPE SPECIFIC CLARIFICATIONS

A. Contract includes the furnish and install required for plumbing scope including but not limited to:
   1. Floor Drains
   2. Mop Basins
   3. Fixtures & Trims
   4. Electric Water Coolers
   5. Hose Bibs and Hydrants
   6. Washer Boxes
   7. Ice Maker Boxes
   8. Domestic Cold & Hot Water Piping
   9. Storm Piping
   10. Sanitary & Vent Piping
   11. Natural Gas Piping
   12. Water Softeners
   13. Water Heaters

14. Thermostatic Mixing Valves
15. Circulating Pumps
16. Expansion Tanks
17. Back Flow Preventors
18. Water Hammer Arrestors
19. Circuit Setters
20. Valves, Gauges, Thermometers & Accessories

B. Provide submittals as indicated in the specifications.

C. Provide record drawings as indicated in the specifications.

D. Provide equipment delivery schedule at pre-construction meeting with all required information as identified in specifications.

E. Provide with bid required form from specifications showing subcontractors, manufacturers, and suppliers of each item listed.

F. Provide product data as indicated in the specifications.

G. Provide all required coordination with domestic water piping brought into the new building by the Earthwork/Site utilities contractor. Earth work subcontractor to bringing water into the new building as shown and terminating with a blind flange at and above 1'-0" above the floor. Plumbing subcontractor to provide and confirm layout.

H. Provide all required coordination with sanitary and storm piping brought up to the new building by the Earthwork/Site utilities contractor. Earthwork subcontractor to bring sanitary piping within 5’-0” of the new building and terminate with a blind flange. Plumbing subcontractor to provide and confirm layout.

I. Provide and complete disinfecting of required piping. Include install and removal of all required piping and accessories to complete this process. Coordinate testing with Pepper field supervision and provide all required documentation (including test results) for review for project team.

J. Coordinate with all in wall blocking subcontractor to appropriately layout required locations and blocking sizing.

K. Provide and complete all required plumbing connections to other trades scope as identified in the project documents. Including but not limited to site subcontractors' pipelines to building,

L. Provide and complete install of under slab piping, including excavation, pipe bedding, backfill, and compaction. Subcontractor responsible for confirming backfilled elevations match existing elevations. Any excess spoils to be hauled to a clean fill site.

M. Coordinate with roofing subcontractor and include approved shop drawings indicating all penetrations through roofing system requiring manufactured pre-molded units or flashed around.

N. Provide and complete all required insulating of pipes, valves, connections, fittings, and accessories.

O. Provide and complete install of roof drains. Include but not limited to dome strainer, sump receiver, clamping ring, pipe, fittings, insulation, supports, hangers, and accessories. Coordinate with steel subcontractor, roofer, and Pepper on install sequence and box out area.

P. Subcontractor is responsible for installing roof drain piping system complete. Including but not limited to pipe, connections, hangers/supports, insulation(s), labels, drain bodies (drain and overflow), cleanouts to create a complete system.

Q. Per the equipment schedule provide plumbing rough-in for all equipment as required. Specifically include the following:
   1. Refrigerators/Freezers – Furnished by General Trades, Final Connections by Plumbing Subcontractor.
   2. Washer/Dryer – Furnished by General Trades, Final Connections by Plumbing Subcontractor.

R. Provide and complete all rough-ins, connections to food service equipment, and installation of loose items provided by the BP-27 subcontractor as required in the project documents. Refer to 11 40 00 section 1.02 for additional information.

S. Coordinate with concrete/masonry subcontractor to ensure all drains and other scope items are set prior concrete pours occur to allow for proper slope to be achieved. Include and complete all required temporary protection over pipe openings.

T. Coordinate height of interior drains with finished flooring elevations.

U. Include any framing and/or supports for plumbing equipment.

V. Furnish only access doors for this scope of Work.

W. Coordinate with BP-07 subcontractor to ensure all plumbing subcontractor's scope related items requiring acoustical sealants, joint sealants, and firestopping are completed.

X. Coordinate all required concrete pads and curbs with building concrete and masonry subcontractor. Provide approved submittals and shop drawings to allow for concrete subcontractor to properly set. Ensure to provide and install all required sleeves, box outs, or other required pre concrete pour items are properly installed.

Y. Coordinate with pre-cast concrete subcontractor to ensure all required plumbing subcontractors scope penetrations greater than 12" in diameter are included in pre-cast concrete approved shop drawings. For any coring in pre-cast panels written documented review must occur with included parties, A/E, pre-cast subcontractor, and Pepper. Subcontractor shall provide nonmetallic sleeves for penetrations through precast. Subcontractor shall coordinate and ship sleeves and drawing indicating the layout of sleeves directly to precast subcontractors' facility. Piping penetrations smaller than 12" in diameter are the responsibility of the plumbing subcontractor.

Z. Subcontractor to review and follow mounting requirements identified in the metal's specifications and drawings. All overhead mounted to be attached to structural steel and not decking unless written approval is obtained.

AA. Provide onsite start-up training for facility. Start up to be recorded to allow for personnel who are unable to attend to have for reference/deliverable to owner.

BB. Provide and complete storage, handling, cleaning, and temporary protection of subcontractor's scope items as identified in project specifications.

CC. Provide and install all required wall and ceiling location access panels for install by metal framing subcontractor. Panel shall match wall ceiling rating requirements per location. Coordinate locations and sizing with metal framing subcontractor and Pepper.

DD. Provide and complete all required labeling, tagging, and identification marking of piping, valves, and equipment.

EE. Subcontractor to supply shop drawings for all interior and exterior housekeeping pads, support pads, and curbs per contract documents for plumbing scope. Supply and install of pads, support pads, and curbs by Concrete subcontractor (BP-02A). Layout to be performed by concrete subcontractor and reviewed by plumbing subcontractor. Any additional pads or curbs not identified prior to bidding will be picked up by the plumber.

FF. Subcontractor to coordinate all plumbing fixture cutouts with BP-21 Millwork subcontractor. For items requiring shop mounting (integral sinks for example), coordinate delivery with BP-21 Millwork subcontractor to avoid any delays in the project schedule.

GG. All grease waste piping shall be schedule 40 cast iron, no hub piping as indicated on the project documents.

HH. Subcontractor shall obtain all necessary permits required for this scope of work.

II. Subcontractor shall be responsible for touch-up painting of any factory painted equipment. Any piping requiring painting shall be the responsibility of the BP-20 Painting and Wall Coverings subcontractor

JJ. Subcontractor shall provide all vibration isolation as required by the project documents.

KK. Provide assistance with the Owner’s Commissioning Authority as required in the project documents.

LL. Should the BP-01 Earthwork subcontractor encounter any existing plumbing lines underground that has not been disconnected and/or abandoned, BP-01 subcontractor shall report findings to Pepper construction. Make-safe and disconnection work will be completed by the plumbing subcontractor. The removal of the underground piping will still be included in the BP-01 subcontractor's scope of work.

1.4 EXCLUSIONS

A. The following items have been specifically excluded from this bid package:
   1. Payment and performance bond.
   2. Full time, non-working safety professional.
   3. Interior and exterior housekeeping pads, support pads, and curbs per contract documents.
   4. Firestopping

5. Joint Sealants
6. Acoustical Sealants
7. Dumpsters
8. Painting of Piping

1.5 ALLOWANCES*

***Allowance funding may be removed by Pepper Construction at any point within the project at the sole discretion of Pepper Construction. Funds that have already been agreed to and have been spent from an allowance are no longer subject to removal.**

A. Composite cleaning crew: All subcontractors provide a laborer, on a weekly basis, to compile a composite crew that will be utilized for construction cleaning at the sole direction of Peppers' superintendent. Subcontractors will only be required to provide an individual only during the time the subcontractor or tiered subcontractors are performing work onsite. This shall be figured at 8 hours per week.

1.6 DESIGN ALTERNATES
1. Alternate #1: Site Aggregate Path Alternate.
2. Alternate #2: Playground Surfacing Alternate.
3. Alternate #3: Telescoping Stands and Retractable Audience Seating Alternate.
4. Alternate #4: Motor Operated Roller Shades Alternate.
5. Alternate #5: Area Rugs Alternate.

1.7 CONSTRUCTION ALTERNATES
1. Alternate #1: Site Concrete
2. Alternate #2: Joint Sealants, Acoustical Sealants, Fire Stopping

1.8 UNIT PRICES

A. Current Labor Rates (do not include overhead and profit).

1.9 BREAKOUTS

A. Water Heaters

B. Thermostatic Mixing Valves

C. Circulating Pumps

D. Expansion & Storage Tanks

E. Water Softener

F. Domestic Water Piping

G. Sanitary & Vent Piping

H. Roof Drains

I. Storm Piping

J. Pipe Insulation

K. Natural Gas Piping

L. Plumbing Fixtures

M. Hose Bibs & Hydrants

N. Floor Drains

PRODUCTS (Not Used)

PART 2 - EXECUTION (Not Used)

END OF SECTION 01 00 00

EXHIBIT B – Bid Package 10 – HVAC

PART 1 - GENERAL

1.1 PROJECT DRAWINGS & SPECIFICATION

A. Contract to include the following drawings for reference.
   1. For a full listing of drawings and specifications reference Exhibit A Drawings and Specifications Logs.
   2. Scope Specific Specifications:
      1) 00 Procurement and Contracting Requirements
      2) 00 62 75 – Inflation Reduction Act Breakout Form
      3) 01 General Requirements
      4) 05 50 00 – Metal Fabrications (Partial)
      5) 08 31 13 – Access Doors and Frames (Partial)
      6) 11 53 11 – 11 31 00 Residential Appliances
      7) 11 40 00 – Foodservice Equipment
      8) 11 95 00 – Kilns (Partial)
      9) 20 00 10 – Common Work Results for Fire Suppression, Plumbing and HVAC
      10) 20 00 50 – Common Materials and Methods for Fire Suppression, Plumbing and HVAC
      11) 20 00 60 – Common Pipe, Valves, Fittings and Hangers for Fire Suppression, Plumbing and HVAC
      12) 20 01 80 Common Insulation for Plumbing and HVAC
      13) Division 23 – Heating, Ventilating and Air-Conditioning (HVAC) Complete

1.2 PROJECT SPECIFIC CLARIFICATIONS

A. See attached exhibit B.1

1.3 SCOPE SPECIFIC CLARIFICATIONS

A. All lifts shall maintain a diaper for duration of being onsite and be free of any fasteners in tires. Wheels shall be non-marking.

B. Include all necessary steel framing and supports for mechanical equipment.

C. Include all HVAC related accessories for fire alarm system.

D. Provide all access doors associated with this scope of Work. Subcontractor is responsible for identifying locations on drawing sheets on location access doors are to be installed. Installation to be by interior framing subcontractor.

E. Contract includes the furnish and install required for heating, ventilating, and air-conditioning (HVAC) scope including but not limited to the following items as shown on the project drawings and noted on project specifications:

1. Hydronic Piping Systems
2. Ground-Loop Heat-Pump Piping
3. Pumps
4. Refrigerant Piping
5. HVAC Water Treatment
6. Metal Ducts
7. Air Duct Accessories
8. HVAC Power Ventilators
9. Air Terminal Units
10. Diffusers, Registers, Grilles, and Louvers
11. HVAC Gravity Ventilators
12. Breechings, Chimneys and Stacks
13. Packaged Air to Air Energy Recovery Ventilators
14. Direct Fired Make-up Air Units
15. Mini-Split Air Conditioners
16. Water-Source Heat Pumps
17. Duct Silencers
18. Electric Finned Tube Radiators
19. Electric Unit Heaters
20. Expansion Tanks and Air Separators
21. Trenched Fan-Coil Units
22. HVAC Instrumentation & Controls
23. Test, Adjusting, And Balancing
24. Filter Feeders
25. Glycol Makeup Units
26. Variable Frequency Drives
27. Drip Pans

F. Provide submittals as indicated in the specifications.

G. Provide record drawings as indicated in the specifications.

H. Provide equipment delivery schedule at pre-construction meeting with all required information as identified in specifications.

I. Provide with bid required form from specifications showing subcontractors, manufacturers, and suppliers of each item listed.

J. Provide product data as indicated in the specifications.

K. Coordinate with all in wall blocking contractor to appropriately layout required locations and blocking sizing.

L. Subcontractor shall provide all required disconnects, switches, starters, variable frequency drives and all other means of controls related to all equipment under this package. Subcontractor shall coordinate with electrical subcontractor on bringing power to units. All low voltage (control cable) shall be provided and installed by HVAC subcontractor and follow project documents following manufactures requirements on cable.

M. Provide and complete all required HVAC connections to other trades scope as identified in the project documents. Including but not limited to site subcontractors' pipelines to building,

N. Include all HVAC trims at all thru-wall penetrations.

O. Provide and complete install of under slab piping, including excavation, pipe bedding, backfill, and compaction. Subcontractor responsible for confirming backfilled elevations match existing elevations.

P. Coordinate with roofing subcontractor and include approved shop drawings indicating all penetrations through roofing system requiring manufactured pre-molded units or flashed around.

Q. Provide and complete all required insulating of pipes, valves, connections, fittings, and accessories.

R. Coordinate with BP-07 subcontractor to ensure all plumbing subcontractor's scope related items requiring acoustical sealants, joint sealants, and firestopping are completed.

S. Coordinate all required concrete pads and curbs with building concrete and masonry subcontractor. Provide approved submittals and shop drawings to allow for concrete subcontractor to properly set. Ensure to provide and install all required sleeves, box outs, or other required pre concrete pour items are properly installed.

T. Subcontractor to review and follow mounting requirements identified in the metal's specifications and drawings.

U. Provide onsite start-up training for facility. Start up to be recorded to allow for personnel who are unable to attend to have for reference/deliverable to owner.

V. Provide and complete chemical treatment, pipe flushing, hydrostatic testing; including set up and removal of required temporary protection, testing ports, valves, pipe, gauges, and accessories. Include all required labor and supervision to complete test. Provide appropriate documentation of testing and submit to Pepper and identified required parties.

W. Provide and complete storage, handling, cleaning, and temporary protection of subcontractor's scope items as identified in project specifications.

X. Coordinate with pre-cast concrete subcontractor to ensure all required HVAC subcontractors scope penetrations greater than 12" in diameter are included in pre-cast concrete approved shop drawings. For any coring in pre-cast panels written documented review must occur with included parties, A/E, pre-cast subcontractor, and Pepper. Subcontractor shall provide nonmetallic sleeves for penetrations through precast. Subcontractor shall coordinate and ship sleeves and drawing indicating the layout of sleeves directly to precast subcontractors' facility. Piping penetrations smaller than 12" in diameter are the responsibility of the HVAC subcontractor.

Y. Provide all required wall and ceiling location access panels for install by metal framing subcontractor. Panel shall match wall ceiling rating requirements per location. Coordinate locations and sizing with metal framing subcontractor and Pepper.

Z. Provide and complete all required labeling, tagging, and identification marking of piping, valves, and equipment. Subcontractor to also label ceilings and access panels identifying valves and or other systems not visible.

AA. Review, identify, and coordinate lintel locations, quantity, and sizing in shop drawings for Concrete/Masonry subcontractor to provide and install.

BB. Provide and complete temporary use of new equipment to allow for conditioning of building following the standards identified in the specifications and for the duration indicated in the project schedule. Additionally, provide required cleaning and replacement of filters during the construction phase along with replacement of filters and cleaning through substantial completion.

CC. Provide and complete insulating of all required duct, equipment, pipe, and accessories as identified in the project documents. Ensure items requiring coatings are completed and inspected prior to insulating.

DD. Provide and complete all integration into building management system. This shall include but not limited to programing, connections, devices, calibration, and programs.

EE. Provide and complete install of required drip pans for all piping and equipment completed under this scope in accordance with project documents.

FF. Provide and complete all required test and demonstration of all life safety systems completed by this subcontractor operate correctly.

GG. During construction, this subcontractor is responsible for providing and installing temporary filters. At project turnover/completion, this subcontractor is responsible for removing and dispose of all temporary filters and provide and install final filters at all locations.

HH. Within 90 days of completing testing, adjusting, and balancing, perform additional testing and balancing to verify that balanced conditions are being maintained throughout and to correct unusual conditions.as required in the specifications. Ensure that along with coordinating these re-inspections with the owner and A/E to include Pepper in the set-up of these onsite testing visits and electronic copies of reports.

II. If initial testing, adjusting, and balancing procedures were not performed during near-peak summer and winter conditions, perform additional inspections, testing, and adjusting during near-peak summer and winter conditions, if so requested by Owner/Engineer. Ensure that along with coordinating these re-inspections with the owner and A/E to include Pepper in the set-up of these onsite testing visits and electronic copies of reports.

JJ. Furnish and install all mechanical louvers. Coordinate locations and installation with precast subcontractor. Include all bird/insect screening and insulated blank-off panels as indicated.

KK. HVAC controls shall be Trane installed by the local branch office or Distech installed by Jackson Systems. No exceptions or substitutions will be accepted.

LL. Provide and complete ground loop piping system as indicated in the project documents. All vaults will be the responsibility of this subcontractor. The owner is going after tax credits for this work, assistance with documentation and paperwork for the tax credit will be the responsibility of this subcontractor. Refer to specification section 00 62 75 Inflation Recovery Act Breakout Form for additional requirements

MM. Provide and complete all excavation, pipe bedding, backfill, and compaction for the ground loop piping system. Subcontractor responsible for confirming backfilled elevations match existing elevations. Backfill to within +/- 1" of final grade.

NN. Provide assistance with the Owner's Commissioning Authority as required in the project documents.

OO. Subcontractor shall obtain all necessary permits required for this scope of work.

PP. Subcontractor shall be responsible for touch-up painting of any factory painted equipment. Any piping requiring painting shall be the responsibility of the BP-20 Painting and Wall Coverings subcontractor

QQ. Subcontractor shall provide all vibration isolation as required by the project documents.

RR. Provide and complete all rough-ins, connections to food service equipment, and installation of loose items provided by the BP-27 subcontractor as required in the project documents. Refer to 11 40 00 section 1.02 for additional information.

SS. Should the BP-01 Earthwork subcontractor encounter any existing HVAC lines underground that has not been disconnected and/or abandoned, BP-01 subcontractor shall report findings to Pepper construction. Make-safe and disconnection work will be completed by the HVAC subcontractor. The removal of the underground piping will still be included in the BP-01 subcontractor's scope of work.

1.4 EXCLUSIONS

A. The following items have been specifically excluded from this bid package:
   1. Payment and performance bond.
   2. Full time, non-working safety professional.
   3. Interior and exterior concrete housekeeping pads.
   4. Joint Sealants, Acoustical Sealants, and Firestopping
   5. Dumpsters
   6. Painting of Ductwork and Piping

1.5 ALLOWANCES*

***Allowance funding may be removed by Pepper Construction at any point within the project at the sole discretion of Pepper Construction. Funds that have already been agreed to and have been spent from an allowance are no longer subject to removal.**

A. Composite cleaning crew: All subcontractors provide a laborer, on a weekly basis, to compile a composite crew that will be utilized for construction cleaning at the sole direction of Peppers' superintendent. Subcontractors will only be required to provide an individual only during the time the subcontractor or tiered subcontractors are performing work onsite. This shall be figured at 8 hours per week.

1.6 ALTERNATES

1. Alternate #1: Site Aggregate Path Alternate.
2. Alternate #2: Playground Surfacing Alternate.
3. Alternate #3: Telescoping Stands and Retractable Audience Seating Alternate.
4. Alternate #4: Motor Operated Roller Shades Alternate.
5. Alternate #5: Area Rugs Alternate.

1.7 CONSTRUCTION ALTERNATES

1. Alternate #1: Site Concrete
2. Alternate #2: Joint Sealants, Acoustical Sealants, Fire Stopping

1.8 UNIT PRICES

A. Current Labor Rates (do not include overhead and profit).

1.9 BREAKOUTS

A. Ground-Loop Heat-Pump Piping

B. Testing, Adjusting and Balancing

C. Building Automation System (DDC Controls)

D. Hydronic Piping, Specialties, Pumps and Tanks

E. Pipe Insulation

F. Metal Ducts, Air Duct Accessories, GRDs, Air Terminal Units

G. HVAC Fans

H. Duct Insulation

I. Packaged Air to Air Energy Recovery Ventilators

J. Direct Fired Make-up Air Units

K. Water Source Heat Pumps

L. Mini-Split Air Conditioners

M. Fan Coil Units

N. Variable Frequency Drives

O. Electric Unit Heaters and Finned Tube Radiators

PRODUCTS (Not Used)

PART 2 - EXECUTION (Not Used)

END OF SECTION 01 00 00

EXHIBIT B – Bid Package 11 – Electrical/Low Voltage/Security/Fire Alarm/HVAC and Door Rough-ins/Pathways

PART 1 - GENERAL

1.1 PROJECT DRAWINGS & SPECIFICATION

A. Contract to include the following drawings for reference.
   1. For a full listing of drawings and specifications reference Exhibit A Drawings and Specifications Logs.
   2. Scope Specific Specifications:
      1) 00 Procurement and Contracting Requirements
      2) 01 General Requirements
      3) 05 50 00 – Metal Fabrications (Partial)
      4) 08 31 13 – Access Doors and Frames (Partial)
      5) 10 11 00 – Visual Display Surface (Rough-In/Power)
      6) 10 12 00 – Display Cases (Rough-In/Power)
      7) 10 14 19 – Dimensional Letter Signage (Rough-In/Power)
      8) 10 14 23 – Panel Signage (Rough-In/Power)
      9) 10 14 26 – Post and Panel/Pylon Signage (Rough-In/Power)
      10) 10 28 00 – Toilet, Bath, and Laundry Accessories (Rough-In/Power)
      11) 11 31 00 – Residential Appliance (Rough-In/Power)
      12) 11 40 00 – Foodservice Equipment (Rough-In/Power)
      13) 11 62 00 – Entertainment Equipment (Rough-In/Power)
      14) 11 66 23 – Gymnasium Equipment (Rough-In/Power)
      15) 11 68 00 – Playground Equipment (Rough-In/Power)
      16) 11 95 00 – Kilns (Rough-In/Power)
      17) 14 24 00 – Hydraulic Elevators (Rough-In/Power)
      18) 22 11 23 – Domestic Water Circulation Pumps (Rough-In/Power)
      19) 22 31 00 – Domestic Water Softeners (Rough-In/Power)
      20) 22 34 00 – Gas-Fired Domestic Water Heaters (Rough-In/Power)
      21) 22 47 00 – Drinking Fountains and Water Coolers (Rough-In/Power)
      22) 22 67 19 – Reverse Osmosis System Equipment (Rough-In/Power)
      23) 23 09 00 – Instrumentation and Control for HVAC (Rough-In/Power)
      24) 23 21 23 – Hydronic Pumps and Trim(Rough-In/Power)
      25) 23 34 23 – HVAC Power Ventilators (Rough-In/Power)
      26) 23 36 00 – Air Terminal Units (Rough-In/Power)
      27) 23 72 00 – Packaged Air to Air Energy Recovery Ventilators (Rough-In/Power)
      28) 23 74 32 – Direct Fired Make-up Air Units (Rough-In/Power)
      29) 23 81 34 – Mini-Split Air-Conditioning (Rough-In/Power)
      30) 23 81 46 – Water-Source Unitary Heat Pumps (Rough-In/Power)
      31) 23 82 34 – Convectors & Radiation - Electric (Rough-In/Power)
      32) 23 82 40 – Unit Heaters - Electric (Rough-In/Power)
      33) Division 26 – Electrical (Complete)
      34) Division 27 – Communications (Complete)
      35) Division 28 – Electronic Safety & Security (Complete)

1.2 PROJECT SPECIFIC CLARIFICATIONS

A. See attached exhibit B.1

1.3 SCOPE SPECIFIC CLARIFICATIONS

A. Temporary power items listed below. Subcontractor to provide coordination and complete tie in of temporary to existing power companies electrical services. Subcontractor to coordinate any required shut downs to install and remove temporary power. Owner is responsible for temporary power consumption utility charges. Subcontractor is responsible for all costs associated with temporary power hookup fees, permitting, and other cost associated with temporary power setup as well as any costs associated with temporary power removal not to remain or abandon in place. Subcontractor shall make all final connections to items listed below.:
   1. Main Temporary Service: Sized to match final building power requirements
   2. HVAC Temporary Power:
   3. Pepper Office Trailer:
   4. Temporary Building Lighting
   5. Temporary Power
   6. Include demolition/removal of all temporary power and lighting as directed by Pepper Construction.

B. Subcontract includes the furnish and install required for electrical scope including but not limited to the following items as shown on the project drawings and noted on project specifications:
   1. Electrical Power Conductors and Cables
   2. Control-Voltage Electrical Power Cables
   3. Grounding & Bonding
   4. Transformers
   5. Switchboards
   6. Panelboards
   7. Electricity Metering
   8. Wiring Devices
   9. Fuses
   10. Enclosed Switches
   11. Enclosed Controllers
   12. Engine Generator System
   13. Automatic Transfer Switches
   14. Surge Protection
   15. Exterior & Interior Building Lighting and Lighting Controls
   16. Signage Power
   17. Low Voltage Rough-In

C. Provide all excavation, bedding, backfill, and compaction required for incoming power service. Subcontractor responsible for confirming backfilled elevations match existing elevations. Any excess spoils to be hauled to a clean fill site.

D. Electrical subcontractor to provide ring and string through all data conduit that does not have cable being installed by this subcontractor.

E. Provide submittals as indicated in the specifications.

F. Provide record drawings as indicated in the specifications.

G. Provide all necessary anchor bolts for the concrete subcontractor to place within housekeeping pads.

H. Provide equipment delivery schedule at pre-construction meeting with all required information as identified in specifications.

I. Provide with bid required form from specifications showing subcontractors, manufacturers, and suppliers of each item listed.

J. Provide product data as indicated in the specifications.

K. Provide and deliver to site required spare parts for owner's attic stock. Ensure all items are counted and a transmittal is provided with each delivery. Coordinate with Pepper.

L. Coordinate with all in wall blocking subcontractor to appropriately layout required locations and blocking sizing. Electrical subcontractor to review and sign off on framing subcontractors marked locations on studs.

M. Provide rough-in and power for all indicated equipment shown on the Equipment schedule.

N. Subcontractor to provide power and pathways for all automatic door operators, regardless of location and voltage/amps. Subcontractor to request for all clarifications prior to bid day. No additional funding will be procured for any locations not identified by electrical subcontractor.

O. Provide and complete electrical requirements as identified in the plumbing specification and drawings complete.

P. Provide and complete all required HVAC electrical feeds and connections as identified in the project documents.

Q. Provide and complete all required Fire Suppression electrical feeds and connections as identified in the project documents.

R. Provide and complete install of under slab conduits, boxes, including excavation, bedding, backfill, and compaction. Subcontractor responsible for confirming backfilled elevations match existing elevations. Subcontractor is responsible for removal of all spoils created from this this scope of work.

S. Coordinate with roofing subcontractor and include approved shop drawings indicating all penetrations through roofing system requiring manufactured pre-molded units or flashed around.

T. Coordinate with BP-07 subcontractor to ensure all plumbing subcontractor's scope related items requiring acoustical sealants, joint sealants, and firestopping are completed.

U. Coordinate all required concrete pads and curbs with building concrete and masonry subcontractors. Provide approved submittals and shop drawings to allow for concrete subcontractor to properly install pads/curbs. Ensure to provide and install all required sleeves, box outs, or other required pre concrete pour items are properly installed.

V. Provide onsite start-up training for facility. Start up to be recorded to allow for personnel who are unable to attend to have for reference/deliverable to owner.

W. Provide and complete storage, handling, cleaning, and temporary protection of subcontractor's scope items as identified in project specifications.

X. Subcontractor to provide and install all ADA push pad pathways including underground runs.

Y. Provide and complete grounding and bonding of complete build and equipment and as identified in project documents. Including but not limited to grounding loop system.

Z. Provide and complete all electrical including but not limited to site building lights, spare/future use conduits, tie into existing building, exterior rated GFIs, gates, and accessories.

AA. Provide and complete all interior lighting identified in the project documents including but not limited to can lights, dock lights, emergency backup lights, lay in fixtures, exit signs, and specialty lighting.

BB. Subcontractor to provide Elevator with power per the project documents. Electrical subcontractor to land supply power cables in disconnects. Electrical subcontractor to supply and install all associated cabling, disconnects, etc. for elevator power as part of this subcontract. Coordinate disconnect sizing with Elevator subcontractor and provide final coordination drawings for approval based on said coordination.

CC. Provide and coordinate with local electrical company to define cost associated with bringing in the new feed and meter as defined in the project documents. Subcontractor shall take full responsibility to include all cost in base bid to pay for utility company scope of work.

DD. Coordinate with pre-cast concrete subcontractor to ensure all required electrical subcontractors scope penetrations greater than 12" in diameter are included in pre-cast concrete approved shop drawings. For any coring in pre-cast panels written documented review must occur with included parties, A/E, pre-cast subcontractor, and Pepper. All sleeves to be non-metallic and subcontractor to ship to precast subcontractors' facility. Subcontractor shall coordinate and ship sleeves and drawing indicating the layout of sleeves directly to precast subcontractors' facility. Penetrations smaller than 12" in diameter are the responsibility of the electrical subcontractor.

EE. Provide all required wall and ceiling location access panels for install by metal framing subcontractor. Panel shall match wall ceiling rating requirements per location. Coordinate locations and sizing with metal framing subcontractor and Pepper.

FF. Provide and complete all required labeling, tagging, and identification marking of all of the following items but not limited to equipment, panels, conduits, boxes, gear, receptacles, and switches.

GG. Provide and complete temporary use of new equipment to allow for conditioning of building following the standards identified in the specifications and for the duration indicated in the project schedule. Additionally, provide required cleaning and replacement as required prior to substantial completion.

HH. Provide and complete the following wiring devices but not limited to switches, receptacles, photocell, subcontractors, pilot light, wall dimmer controls, (dual technology) occupancy sensors, and (passive infrared) occupancy sensors.

II. Provide and complete install of floor boxes and associated accessories. Subcontractor to coordinate with other trades finishes to confirm final elevation requirements.

JJ. Provide and complete install of emergency generator. Subcontractor to include all the following but not limited to generator, connection cabinet, alternator, controls, starting system, exhaust system, annunciator, tanks, cabling, supports, and accessories.

KK. Subcontractor to complete set up and testing of generator and at turn over ensure all fluid levels are topped off including but not limited to oils, fuel, and cooling water.

LL. Subcontractor to provide and complete fire detection and alarm wire and connect the waterflow, the valve supervisory switches.

MM. Provide and complete all required test and demonstration of all life safety systems completed by this subcontractor operate correctly.

NN. For required cutting and patching of permanent scopes in place to allow for install of electrical subcontractors scope it will be at the sole cost of the electrical subcontractor to have the permanent scopes cut and patched.

OO. This subcontractor is responsible for all work indicated as by contractor on the Technology Responsibility Matrix on drawing T000 for the following systems:
1. General Low Voltage
2. Audio/Video
3. Access Control
4. Video Security
5. Paging

PP. Provide and install required flame-retardant plywood ensuring all sheets have identification stencil fully visible upon completion of installation.

QQ. Provide and complete install of identified underground conduit to be utilized for service and distribution.

RR. Provide and complete install of in-wall conduits stubbed above ceiling with an insulating bushing installed on the end.

SS. Subcontractor is responsible for reviewing 10 28 00 electrified accessories in submittals identify electrical requirements including but not limited to amps/voltage, plug style, and length of cords match project documents. If variation is identified electrical subcontractor is responsible for identifying issue and sending through formal RFI.

TT. Subcontractor is responsible for supply, install, terminations, and testing of required phone lines to each elevator. Subcontractor to coordinate final landing location for each elevator with finalized approved shop drawings. Lines shall then be ran back from elevator to main data room.

UU. Contract includes the furnish and install required for electronic safety and security scope including but not limited to the following items as shown on the project drawings and noted on project specifications:
   1. Fire Detection and Alarm
   2. Pull Stations
   3. Detectors
   4. Alarm Signaling Devices
   5. Annunciators
   6. Control Panel
   7. Digital Alarm Communicating Transmitter
   8. Software
   9. Backup System

VV. Subcontractor shall provide pre-painted fire alarm system j-boxes. Field painting of boxes shall not be permitted.

WW. Provide and deliver to site required spare parts for owner's attic stock. Ensure all items are counted and a transmittal is provided with each delivery. Coordinate with Pepper.

XX. Provide and complete temporary install and removal of required monitoring to allow for HVAC to provide temporary conditioning of the building as defined in the schedule and specifications. Install of devices to include all the following items but not limited to cabling, monitoring services, detectors, and accessories. Subcontractor to provide required coordination early on to confirm written plan is submitted to A/E and Owner for review and approval.

YY. Subcontractor shall provide all required power for VFDs, disconnects, switches, starters and all other means of controls related to all equipment under this package. Subcontractor shall coordinate with all other subcontractor scopes to provide power to units. All low-voltage, temperature control cabling shall be provided and installed by HVAC subcontractor and follow project documents following manufactures requirements on cable.

ZZ. Subcontractor to complete install of all required cabling and raceways including all of following but not limited to conduits, supports, hangers, conduit fittings, power and data cable and connectors, boxes, cover plates, identification (labeling/tagging), and accessories.

AAA. Provide and complete all required test and demonstration of all life safety systems completed by this subcontractor operate correctly.

BBB. Provide and complete all power, low voltage cabling, raceways, and accessories to tie fire suppression flow switches, tamper switches, or similar devices into the fire alarm.

CCC. New main service equipment and conductors to utility transformer included in this scope of work. Include supply, install, testing, and certification of new main service equipment to conductors.

DDD. Provide and complete all site lighting as indicated in the project documents. Include all underground conduit/rough-in and wiring necessary for this scope of work. This includes but not limited to all light poles and uplighting as indicated.

EEE. Provide and complete all lighting and power wiring associated with the vaults for the geothermal system. The owner is going after tax credits for this work, assistance with documentation and

paperwork for the tax credit will be the responsibility of this subcontractor. Refer to specification section 00 62 75 Inflation Recovery Act Breakout Form for additional requirements

FFF. Subcontractor is responsible to place all concrete piers for new light poles as indicated.

GGG. Subcontractor shall obtain all necessary permits required for this scope of work.

HHH. Subcontractor shall be responsible for touch-up painting of any factory painted equipment. Any conduit requiring painting shall be the responsibility of the BP-20 Painting and Wall Coverings subcontractor

III. Subcontractor shall provide all vibration isolation as required by the project documents.

JJJ. Provide assistance with the Owner's Commissioning Authority as required in the project documents.

KKK. Provide and complete all rough-ins, connections to food service equipment, and installation of loose items provided by the BP-27 subcontractor as required in the project documents. Refer to 11 40 00 section 1.02 for additional information.

LLL. Should the BP-01 Earthwork subcontractor encounter any existing electric lines underground that has not been disconnected and/or abandoned, BP-01 subcontractor shall report findings to Pepper construction. Make-safe and disconnection work will be completed by the electrical subcontractor. The removal of the underground conduit/piping will still be included in the BP-01 subcontractor's scope of work.

1.4 EXCLUSIONS

A. The following items have been specifically excluded from this bid package:
1. Payment and performance bond.
2. Full time, non-working safety professional.
3. Firestopping
4. Joint Sealants
5. Acoustical Sealants
6. Data Network Switches, UPS, PDU (By Owner)
7. Procurement of Wireless Access Points (By Owner)
8. Procurement of Clocks (By Owner)
9. Paging system speaker (Contracted directly by Owner)
10. Entrance ISP Fiber (By Owner)
11. Entrance ISP Copper (By Owner)
12. AV System in-room point-to-point cabling, flat panel displays and mounts, patch cables, programming, commissioning, and warranty (Contracted directly by Owner)
13. Painting of Conduits
14. Equipment Pads

1.5 ALLOWANCES*

***Allowance funding may be removed by Pepper Construction at any point within the project at the sole discretion of Pepper Construction. Funds that have already been agreed to and have been spent from an allowance are no longer subject to removal.**

A. Composite cleaning crew: All subcontractors provide a laborer, on a weekly basis, to compile a composite crew that will be utilized for construction cleaning at the sole direction of Peppers' superintendent. Subcontractors will only be required to provide an individual only during the time the subcontractor or tiered subcontractors are performing work onsite. This shall be figured at 8 hours per week.

B. Temporary electrical and hookups: $100,000.00

1.6 ALTERNATES

1. Alternate #1: Site Aggregate Path Alternate.
2. Alternate #2: Playground Surfacing Alternate.
3. Alternate #3: Telescoping Stands and Retractable Audience Seating Alternate.
4. Alternate #4: Motor Operated Roller Shades Alternate.
5. Alternate #5: Area Rugs Alternate.

1.7 CONSTRUCTION ALTERNATES

1. Alternate #1: Site Concrete
2. Alternate #2: Joint Sealants, Acoustical Sealants, Fire Stopping

1.8 UNIT PRICES

A. Current Labor Rates (do not include overhead and profit).

1.9 BREAKOUTS

A. Temporary Power and Lighting

B. Electrical Gear, Main Distribution Panels and Switchboards

C. Feeders

D. Transformers

E. Branch Panels

F. Branch Wiring

G. Grounding and Bonding

H. Power Devices and Equipment Power

I. Interior Lighting and Controls

J. Exterior Building Lighting and Controls

K. Emergency Generator System and ATS

L. Fire Alarm System

M. Data/Telecomm System

N. AV System

O. Access Control System

P. Video Security System

PRODUCTS (Not Used)

PART 2 - EXECUTION (Not Used)

END OF SECTION 01 00 00

EXHIBIT B – Bid Package 12 – Fire Suppression

PART 1 - GENERAL

1.1 PROJECT DRAWINGS & SPECIFICATION

A. Contract to include the following drawings for reference
   1. For a full listing of drawings and specifications reference Exhibit A Drawings and Specifications Logs.
   2. Scope Specific Specifications:
      1) 00 Procurement and Contracting Requirements
      2) 01 General Requirements
      3) 08 31 13 Access Doors (Supply Only)
      4) 20 00 10 – Common Work Results for Fire Suppression, Plumbing and HVAC
      5) 20 00 50 – Common Materials and Methods for Fire Suppression, Plumbing and HVAC
      6) 20 00 60 – Common Pipe, Valves, Fittings and Hangers for Fire Suppression, Plumbing and HVAC
      7) 21 10 00 – Water-Based Fire-Suppression Systems

1.2 PROJECT SPECIFIC CLARIFICATIONS

A. See attached exhibit B.1

1.3 SCOPE SPECIFIC CLARIFICATIONS

A. All lifts shall maintain a diaper for duration of being onsite and be free of any fasteners in tires. Wheels shall be non-marking.

B. Subcontractor to supply shop drawings for all interior and exterior housekeeping pads, support pads, and curbs per contract documents for Fire Suppression scope. Supply and install of pads, support pads, and curbs by Concrete subcontractor (BP-02A). Layout to be performed by concrete subcontractor and reviewed by Fire Suppression subcontractor. Any additional pads or curbs not identified prior to bidding will be picked up by Fire Suppression subcontractor.

A. Subcontractor to include all labor, materials, tools, equipment, and supervision necessary to complete the fire suppression scope of work.

B. Provide submittals as indicated in the specifications.

C. Provide record drawings as indicated in the specifications.

D. Provide equipment delivery schedule at pre-construction meeting with all required information as identified in specifications.

E. Provide product data as indicated in the specifications.

F. Coordinate with all in wall blocking subcontractor to appropriately layout required locations and blocking sizing.

G. Provide, complete, and coordinate with electrical subcontractor for all interconnecting systems between the fire suppression and detection systems per requirements as identified in the specification and drawings complete.

H. Coordinate with roofing subcontractor and include approved shop drawings indicating all penetrations through roofing system requiring manufactured pre-molded units or flashed around.

I. Coordinate with BP-07 subcontractor to ensure all plumbing subcontractor's scope related items requiring acoustical sealants, joint sealants, and firestopping are completed.

J. Coordinate all required concrete pads and curbs with building concrete and masonry subcontractor. Provide approved submittals and shop drawings to allow concrete subcontractor to properly set. Ensure to provide and install all required sleeves, box outs, or other required pre concrete pour items are properly installed.

K. Provide onsite start-up training for facility. Start up to be recorded to allow for personnel who are unable to attend to have for reference/deliverable to owner.

L. Provide and complete storage, handling, cleaning, and temporary protection of subcontractor's scope items as identified in project specifications.

M. Coordinate with pre-cast concrete subcontractor to ensure all required fire suppression subcontractors scope penetrations are included in pre-cast concrete approved shop drawings. For any coring in pre-cast panels written documented review must occur with included parties, A/E, pre-cast subcontractor, and Pepper.

N. Provide all required wall and ceiling location access panels for install by metal framing subcontractor. Panels shall match wall ceiling rating requirements per location. Coordinate locations and sizing with metal framing subcontractor and Pepper.

O. Provide and complete install of wet-pipe fire suppression system complete including all of the following items but not limited to pipe, fittings, gauges, switches, sprinkler heads, trims, covers, meters, strainers, valves (automatic and manual), sensors, hangers, supports, drip pans, sleeves, and accessories.

P. Provide upright sprinkler heads above slatted ceiling structure. Provide concealed sprinkler heads in slatted ceiling structure. Provide concealed sprinkler heads required per NFPA 13. Coordinate concealed sprinkler cover with architect.

Q. Provide sprinkler head type as indicated in the project documents.

R. Provide dry pendent sprinkler head in walk-in cooler/freezer unit. Seal penetration with spray foam insulation.

S. Provide and complete all required labeling, tagging, and identification marking of all of the following items but not limited to valves, equipment, controls, concealed equipment and valves, and pipe.

T. Provide and complete all required test and demonstration of all life safety systems completed by this subcontractor operate correctly.

U. Subcontractor to provide and complete install and removal of all required testing equipment, pipe, valves, and accessories to complete testing of system.

V. Coordinate with earthwork subcontractor on specific location required for fire protection piping that the Earthwork/Site utilities subcontractor is bringing into the building. Earthwork subcontractor to bring piping into the new building as shown and terminating with a blind flange at and above 1'-0" above the floor. Fire Suppression subcontractor to provide and confirm layout.

W. Subcontractor shall obtain all necessary permits required for this scope of work.

X. Subcontractor shall be responsible for touch-up painting of any factory painted equipment. Any piping requiring painting shall be the responsibility of the BP-20 Painting and Wall Coverings subcontractor

Y. Subcontractor shall provide all vibration isolation as required by the project documents.

Z. Coordinate with pre-cast concrete subcontractor to ensure all required fire suppression subcontractor's scope penetrations greater than 12" in diameter are included in pre-cast concrete approved shop drawings. For any coring in pre-cast panels written documented review must occur with included parties, A/E, pre-cast subcontractor, and Pepper. Subcontractor shall provide nonmetallic sleeves for penetrations through precast. Subcontractor shall coordinate and ship sleeves and drawing indicating the layout of sleeves directly to precast subcontractors' facility. Piping penetrations smaller than 12" in diameter are the responsibility of the fire suppression subcontractor.

1.4 EXCLUSIONS

A. The following items have been specifically excluded from this bid package:
1. Payment and performance bond.
2. Full time, non-working safety professional.
3. Fire extinguishers and cabinets.
4. Concrete housekeeping pads and curbs.
5. Firestopping.
6. Joint Sealants
7. Acoustical Sealants
8. Fire Suppression within Kitchen Exhaust Hood
9. Painting of piping

1.5 ALLOWANCES*

***Allowance funding may be removed by Pepper Construction at any point within the project at the sole discretion of Pepper Construction. Funds that have already been agreed to and have been spent from an allowance are no longer subject to removal.**

A. Composite cleaning crew: All subcontractors provide a laborer, on a weekly basis, to compile a composite crew that will be utilized for construction cleaning at the sole direction of Peppers' superintendent. Subcontractors will only be required to provide an individual only during the time the subcontractor or tiered subcontractors are performing work onsite. This shall be figured at 8 hours per week.

1.6 ALTERNATES

1. Alternate #1: Site Aggregate Path Alternate.
2. Alternate #2: Playground Surfacing Alternate.
3. Alternate #3: Telescoping Stands and Retractable Audience Seating Alternate.
4. Alternate #4: Motor Operated Roller Shades Alternate.
5. Alternate #5: Area Rugs Alternate.

1.7 CONSTRUCTION ALTERNATES

1. Alternate #1: Site Concrete
2. Alternate #2: Joint Sealants, Acoustical Sealants, Fire Stopping

1.8 UNIT PRICES

A. Current Labor Rates (do not include overhead and profit).

1.9 BREAKOUTS

A. Wet-pipe fire suppression system

1.10 PRODUCTS (Not Used)

PART 2 - EXECUTION (Not Used)

END OF SECTION 01 00 00

EXHIBIT B – Bid Package 13 – Landscape and Site Furnishings

PART 1 - GENERAL

1.1 PROJECT DRAWINGS & SPECIFICATION

A. Contract to include the following drawings for reference
Bartholomew Consolidated School Corporation – New Elementary #12 – Maple Grove
1. For a full listing of drawings and specifications reference Exhibit A Drawings and Specifications Logs.
2. Scope Specific Specifications:
1) 00 Procurement and Contracting Requirements
2) 01 General Requirements
3) 32 33 00 – Site Furnishings
4) 32 91 13 – Topsoil Preparation
5) 32 92 00 – Turf and Grasses
6) 32 93 00 – Plants

1.2 PROJECT SPECIFIC CLARIFICATIONS

A. See attached Exhibit B.1

1.3 SCOPE SPECIFIC CLARIFICATIONS

A. Furnish and install all softscapes items as indicated in the project documents.

B. Provide topsoil analysis of stockpiled material on-site per 32 92 00 – 1.5 B and 32 93 00 – 1.06 C and amend as needed.

C. Fine grading and preparation of topsoil included in this scope of work. Topsoil to be distributed across site and rough graded by others.

D. Excavation and backfill as required for plantings.

E. Supply and install all site furnishings including flagpole, benches, bike racks, litter receptacles, shade structures, bollard sleeves, etc.

F. Supply and install triangle sails at playground area (ref keynote F28/L110).

G. Supply and install concrete footings and fill associated with site furnishings.

H. Supply and install aggregate pavement drip edge (ref keynote P08/L10X and detail 6/L410) including excavation/grading, geotextile fabric, decorative stone, and steel edging.

I. Lawn maintenance per 32 92 00 – 1.8 and plant maintenance per 32 93 00 – 1.10 is included in this scope of work.

J. Removal of tree protection and SWPPP (erosion and sediment control) measures is included in this subcontract after requirements of plantings per the project documents has been met to allow for removal. Installation and maintenance is by BP-01 subcontractor.

K. The subcontractor will be responsible for all excess soil generated from BP-13 scope installation. Excess soils to be removed immediately.

1.4 EXCLUSIONS

A. The following items have been specifically excluded from this bid package:
1. Payment and performance bond.
2. Full time, non-working safety professional.
3. Irrigation
4. Barrier gate
5. Metal gates
6. Bollards
7. Playground equipment or surfacing
8. Site concrete other than foundations/fill for site furnishings

1.5 ALLOWANCES

All allowances shall only be approved for use or deduction from subcontract by Pepper Construction through written notice. At the end or anytime at Pepper Constructions discretion any and all unused allowances can be deducted from the subcontract through a formal change order.

A. Composite cleaning crew: All subcontractors provide a laborer, on a weekly basis, to compile a composite crew that will be utilized for construction cleaning at the sole direction of Peppers' superintendent. Subcontractors will only be required to provide an individual only during the time the subcontractor or tiered subcontractors are performing work onsite. This shall be figured at 8 hours per week. Value $_____

B. Include a $25,000 allowance for additional plantings which may be required by local AHJ. All work must be approved by Pepper Construction prior to proceeding with any allowance work.

1.6 DESIGN ALTERNATES
1. Alternate #1: Site Aggregate Path Alternate.
2. Alternate #2: Playground Surfacing Alternate.
3. Alternate #3: Telescoping Stands and Retractable Audience Seating Alternate.
4. Alternate #4: Motor Operated Roller Shades Alternate.
5. Alternate #5: Area Rugs Alternate.

1.7 CONSTRUCTION ALTERNATES
1. Alternate #1: Site Concrete
2. Alternate #2: Joint Sealants, Acoustical Sealants, Firestopping

1.8 UNIT PRICES

A. Current Labor Rates (do not include overhead and profit).

1.9 BREAKOUTS

A. Plants

B. Grasses

C. Topsoil

D. Maintenance

E. Aggregate Pavement Drip Edge

F. Site Furnishings

G. Allowance

1.10 PRODUCTS (Not Used)

PART 2 - EXECUTION (Not Used)

END OF SECTION 01 00 00

EXHIBIT B – Bid Package 14 – Playground Surfacing and Equipment

PART 1 - GENERAL

1.1 PROJECT DRAWINGS & SPECIFICATION

A. Contract to include the following drawings for reference

Bartholomew Consolidated School Corporation – New Elementary #12 – Maple Grove

1. For a full listing of drawings and specifications reference Exhibit A Drawings and Specifications Logs.
2. Scope Specific Specifications:
   1) 00 Procurement and Contracting Requirements
   2) 01 General Requirements
   3) 11 68 00 Playground Equipment
   4) 31 32 19 Geotextiles
   5) 32 18 16 Playground Surfacing – Engineered Wood Fiber
   6) 32 18 18 Playground Surfacing – Synthetic Turf

1.2 PROJECT SPECIFIC CLARIFICATIONS

A. See attached Exhibit B.1

1.3 SCOPE SPECIFIC CLARIFICATIONS

A. Furnish and install all playground equipment components in the project documents

B. Furnish and install all playground surfacing including engineered wood fiber surfacing and synthetic turf surfacing (ref keynotes P06,P07/L101).

C. Furnish and install concrete footings and fill associated with playground equipment and surfacing including excavation and backfill.

D. Re-dress and fine grading of stone base prior to installation of playground surfacing. Compacted stone under surfacing to be placed and rough-graded to within +/- 0.10’ of proposed elevation by others (ref details 1,3/L602). Include geotextile fabric between stone base and surfacing. Geotextile fabric below stone base to be by others.

E. Furnish and install perimeter curb nailer at play surfacing (ref details 1,2/L602).

F. The subcontractor will be responsible for all excess soil generated from BP-14 scope installation. Excess soils to be removed immediately.

1.4 EXCLUSIONS

A. The following items have been specifically excluded from this bid package:

1. Payment and performance bond.

2. Full time, non-working safety professional.
3. Site concrete other than foundations/fill for playground equipment and surfacing
4. Triangle sail shade structures (keynote F28/L110)
5. Site furnishings

1.5 ALLOWANCES

A. None

1.6 DESIGN ALTERNATES

1. Alternate #1: Site Aggregate Path Alternate.
2. Alternate #2: Playground Surfacing Alternate.
3. Alternate #3: Telescoping Stands and Retractable Audience Seating Alternate.
4. Alternate #4: Motor Operated Roller Shades Alternate.
5. Alternate #5: Area Rugs Alternate.

1.7 CONSTRUCTION ALTERNATES

1. Alternate #1: Site Concrete
2. Alternate #2: Joint Sealants, Acoustical Sealants, Firestopping

1.8 UNIT PRICES

A. Current Labor Rates (do not include overhead and profit).

1.9 BREAKOUTS

A. Playground Surfacing – Engineered Wood Fiber

B. Playground Surfacing – Synthetic Turf

C. Playground Equipment

D. Cushion Layer

E. Geotextile

1.10 PRODUCTS (Not Used)

PART 2 - EXECUTION (Not Used)

END OF SECTION 01 00 00

BP 15 was removed

Pepper Construction
Tomorrow Transformed

EXHIBIT B – Bid Package 16A – INTERIOR & EXTERIOR FRAMING, GYPSUM, BLOCKING and FINISHING

PART 1 - GENERAL

1.1 PROJECT DRAWINGS & SPECIFICATION

A. Contract to include the following drawings for reference

Department of Administration, Public Works – Indiana State Archives Project No. 49020034-22-009-D1

A. For a full listing of drawings and specifications reference Exhibit A Drawings and Specifications Logs.

B. Scope Specific Specifications:

1) 00 Procurement and Contracting Requirements
2) 01 General Requirements
3) 05 40 00 – Cold-Formed Metal Framing
4) 06 10 53 – Miscellaneous Rough Carpentry (Partial)
5) 06 16 00 – Sheathing (Complete)
6) 06 16 43 – Glass-Mat Gypsum Wall Sheathing
7) 07 21 00 – Thermal Insulation (Partial)
8) 07 21 19 – Spray Foam Insulation
9) 07 92 00 – Joint Sealants (Partial)
10) 08 31 13 – Access Doors & Frames (Install)
11) 09 22 16 – Non-Structural Metal Framing
12) 09 26 13 – Gypsum Veneer Plastering
13) 09 29 00 – Gypsum Board

1.2 PROJECT SPECIFIC CLARIFICATIONS

A. See Attached Exhibit B.1.

1.3 SCOPE SPECIFIC CLARIFICATIONS

A. All lifts shall maintain a diaper for duration of being onsite and be free of any fasteners in tires. Wheels shall be non-marking.

B. Upon completion of drywall hanging on each floor lifts will be required to be removed from that floor for the duration of the project. From that point moving forward for remainder of project subcontractors must only utilize ladders and scaffold systems.

C. Provide separate submittal/shop drawings for the building mockup. This will require an early, separate delivery of mockup material in advance of the building material. Any additional shipping/freight charges, mobilizations, equipment, etc. to erect the mockup are to be included in this bid.

D. Material staging and storage is extremely limited. This subcontractor shall include all costs with 'just in time' material and/or equipment delivery.

E. All layout associated with this scope of work has been considered and is included in the base bid. Control points or benchmarks to be established by Pepper Construction Company in coordination with the site utilities subcontractor

F. Schedule – A milestone schedule is included herein the bid documents. Upon award, all subcontractors shall participate in a pull-planning meeting on site in which a detailed schedule showing interaction & coordination among all trades will be created & mutually agreed upon. The project manager and field supervisor responsible for each bid category should be present at each pull planning session.

G. The delegated design of the framing/sheathing shop drawings and calculations to be included in the base bid. This subcontractor has to submit a detailed plan on how they plan to tie into building structure with bid submission (anchors and support).

H. Furnish and install all exterior cold-formed metal framing and sheathing complete.

I. Furnish and install all exterior wood blocking and plywood sheathing as indicated. Includes but not limited to rooftop equipment bases and support curbs, wood blocking and nailers, wood sleepers, plywood backing panels, and parapet ½" thick plywood sheathing (complete), etc. This also includes all blocking/sheathing at the exterior site walls as indicated. All material to be Southern Yellow Pine except where noted to be fire-treated. All plywood to be exterior rated CDX.

J. Upon completion of drywall hanging on each floor lifts will be required to be removed from that floor for the duration of the project. From that point moving forward for remainder of project subcontractors must only utilize ladders and scaffold systems.

K. Furnish and install cement backer board at all wall tile locations.

L. Furnish and install all interior gypsum board walls, ceilings, bulkheads, soffits, etc.

M. Furnish and install all in-wall wood blocking for millwork, wall protection, accessories, acoustical treatments, visual display units, equipment, etc. as indicated. Coordinate locations of all in-wall blocking with subcontractors and any Owner provided and installed furniture, equipment, etc.

N. Furnish and install bulkheads at demountable partition locations as indicated.

O. Furnish and install all plywood wall board as indicated in Mechanical/Electrical/AV rooms.

P. Accessories for gypsum board assemblies not associated with finishing/preparation of board assemblies for final wall covering are furnished and installed by this subcontractor. Interior. This includes, but not limited to, all accessories such as control/expansion joints, corner bead, zip strip, fry reglet reveals, etc.

Q. Subcontractor to install all MEP provided access panels complete. Exact locations to be provided on marked up drawings from MEP subcontractors.

R. Include all temporary conditions and safety measures required for your scope.

S. Include delegated design for your scope per Documents.

T. Include stair and elevator shaft walls per Documents.

U. For interior gypsum areas, include a Level 4 finish. Any area with vinyl wallcovering or vinyl graphics to receive a Level 5 finish.

V. Include all interior and exterior insulation in walls per the Documents.

W. Include framing at exterior conditions for any columns, horizontal spandrels, soffits, eave locations, etc. per the Documents. Intent is for this package to include a complete framing/sheathing package for the entire project.

X. Include cold-formed metal framing per Specification with no exceptions.

Y. Include taping and/or sealing joints of sheathing.

Z. Include in your bid material, labor and equipment costs to meet project schedule. No additional costs will be given for material escalation, labor burden increases, commodity increases, etc.

AA. This scope of work includes all spray foam shown on the project documents.

B. Include any costs associated with the visual, stand-alone mockup per 01 45 10.

1.4 EXCLUSIONS

A. The following items have been specifically excluded from this bid package:
   A. Payment and performance bond.
   B. Firestopping
   C. 07 27 26 - Fluid-Applied Membrane Air Barriers.
   D. 07 84 13 – Penetration Firestopping
   E. 07 84 46 – Fire-Resistive Joint Systems
   F. 07 92 00 – Joint Sealants
   G. 09 51 13 – Acoustical Panel Ceilings
   H. 09 51 33 – Acoustical Metal Ceilings
   I. 09 54 26 – Wood Slat Ceilings
   J. Full-time, non-working safety professional.

1.5 ALLOWANCES

A. Composite cleaning crew: All subcontractors provide a laborer, on a weekly basis, to compile a composite crew that will be utilized for construction cleaning at the sole direction of Peppers' superintendent. Subcontractors will only be required to provide an individual only during the time the subcontractor or tiered subcontractors are performing work onsite. This shall be figured at 8 hours per week.

1.6 DESIGN ALTERNATES:

A. Alternate #1: Site Aggregate Path Alternate.
B. Alternate #2: Playground Surfacing Alternate.
C. Alternate #3: Telescoping Stands and Retractable Audience Seating Alternate.
D. Alternate #4: Motor Operated Roller Shades Alternate.
E. Alternate #5: Area Rugs Alternate.

1.7 CONSTRUCTION ALTERNATES:

A. Alternate #1: Site Concrete
B. Alternate #2: Joint Sealants, Acoustical Sealants, Firestopping

1.8 UNIT PRICES

A. Current Labor Rates (do not include overhead and profit).

B. Equipment Rates

1.9 BREAKOUT PRICING:

A. 05 40 00 – Cold-Formed Metal Framing
B. 06 10 53 – Miscellaneous Rough Carpentry (Partial)
C. 06 16 00 – Sheathing (Complete)
D. 06 16 43 – Glass-Mat Gypsum Wall Sheathing
E. 07 21 00 – Thermal Insulation (Partial)
F. 07 21 19 – Spray Foam Insulation
G. 07 92 00 – Joint Sealants (Partial)
H. 08 31 13 – Access Doors & Frames (Install)
I. 09 22 16 – Non-Structural Metal Framing
J. 09 26 13 – Gypsum Veneer Plastering
K. 09 29 00 – Gypsum Board
L. Mockup

PRODUCTS (Not Used)

PART 2 - EXECUTION (Not Used)

END OF SECTION 01 00 00

EXHIBIT B – Bid Package 16B – Ceilings

PART 1 - GENERAL

1.1 PROJECT DRAWINGS & SPECIFICATION

A. Contract to include the following drawings for reference
Department of Administration, Public Works – Indiana State Archives Project No. 49020034-22-009-D1
A. For full listing of drawings and specifications reference Exhibit A Drawings and Specifications Logs.
B. Scope Specific Specifications:
1) 00 Procurement and Contracting Requirements
2) 01 General Requirements
3) 06 10 53 – Miscellaneous Rough Carpentry (Partial)
4) 08 31 13 – Access Doors and Frames (Install)
5) 09 51 13 – Acoustical Panel Ceilings
6) 09 51 33 – Acoustical Metal Ceilings
7) 09 54 26 – Wood Slat Ceilings
8) 09 84 33 – Sound-Absorbing Wall Units

1.2 PROJECT SPECIFIC CLARIFICATIONS

A. See Attached Exhibit B.1.

1.3 SCOPE SPECIFIC CLARIFICATIONS

A. All lifts shall maintain a diaper for duration of being onsite and be free of any fasteners in tires. Wheels shall be non-marking.

B. Upon completion of drywall hanging on each floor lifts will be required to be removed from that floor for the duration of the project. From that point moving forward for remainder of project subcontractors must only utilize ladders and scaffold systems.

C. Contractor to include all labor, materials, tools, equipment, and supervision necessary to complete the ceiling scope of work.

D. Provide submittals as indicated in the specifications.

E. Provide product data as indicated in the specifications.

F. Provide warranties as indicated in the specifications.

G. Subcontractor to provide and complete all seismic requirements in the project documents and by contractor's engineer.

H. Provide and complete coordination with HVAC contractor and Pepper construction prior to install.

I. Include any necessary rough carpentry for this scope of work.

J. Contractor to provide and install all of the following ceiling system components but not limited to anchors, panels, hangers, braces, ties, moldings, trims, seismic provisions, and acoustical sealant.

K. Scope includes, but no limited to, all acoustical ceiling work including CL1, CL2, CL5, CL6, CL7, & CL8.

L. Include all axiom trims associated with this scope of work.

M. Include any costs associated with the visual, stand-alone mockup per 01 45 10.

1.4 EXCLUSIONS

A. The following items have been specifically excluded from this bid package:
   A. Payment and performance bond.
   B. Full time, non-working safety professional.
   C. Gypsum board ceilings
   D. Firestopping
   E. Joint Sealants
   F. Dumpsters

1.5 ALLOWANCES

A. Composite cleaning crew: All subcontractors provide a laborer, on a weekly basis, to compile a composite crew that will be utilized for construction cleaning at the sole direction of Peppers' superintendent. Subcontractors will only be required to provide an individual only during the time the subcontractor or tiered subcontractors are performing work onsite. This shall be figured at 8 hours per week.

1.6 DESIGN ALTERNATES:
   A. Alternate #1: Site Aggregate Path Alternate.
   B. Alternate #2: Playground Surfacing Alternate.
   C. Alternate #3: Telescoping Stands and Retractable Audience Seating Alternate.
   D. Alternate #4: Motor Operated Roller Shades Alternate.
   E. Alternate #5: Area Rugs Alternate.

1.7 CONSTRUCTION ALTERNATES:
   A. Alternate #1: Site Concrete

B. Alternate #2: Joint Sealants, Acoustical Sealants, Firestopping

1.8 UNIT PRICES

A. Current Labor Rates (do not include overhead and profit.

1.9 Breakout Pricing (For Accounting Purposes Only)

A. 06 10 53 – Miscellaneous Rough Carpentry (Partial)
B. 08 31 13 – Access Doors and Frames (Install)
C. 09 51 13 – Acoustical Panel Ceilings
D. 09 51 33 – Acoustical Metal Ceilings
E. 09 54 26 – Wood Slat Ceilings
F. 09 84 33 – Sound-Absorbing Wall Units
G. Mockup

PRODUCTS (Not Used)

PART 2 - EXECUTION (Not Used)

END OF SECTION 01 00 00

EXHIBIT B – Bid Package 17A – General Trades: Door Systems

PART 1 - GENERAL

1.1 PROJECT DRAWINGS & SPECIFICATION

A. Contract to include the following drawings for reference

Bartholomew Consolidated School Corporation – New Elementary #12 – Maple Grove

1. For full listing of drawings and specifications reference Exhibit A Drawings and Specifications Logs.
2. Scope Specific Specifications:
   1) 00 Procurement and Contracting Requirements
   2) 01 General Requirements
   3) 08 11 13 – Hollow Metal Doors and Frames
   4) 08 14 16 – Flush Wood Doors
   5) 08 33 13 – Coiling Counter Doors
   6) 08 33 23 – Overhead Coiling Doors
   7) 08 34 73 – Wood Sound Control Door Assemblies
   8) 08 71 00 – Door Hardware
   9) 26 05 00 – Common Work Results for Electrical (Partial)
   10) 28 13 00 – Electronic Access Control (Partial)
   11) 32 31 13 – Barrier Gates
   12) 32 31 19 – Metal Gates

1.2 PROJECT SPECIFIC CLARIFICATIONS

A. See attached Exhibit B.1

1.3 SCOPE SPECIFIC CLARIFICATIONS

A. Subcontractor to provide all coordination with other trades and approved shop drawings to finalizing sizing, sequencing of doors and frames, and install of corresponding security functions.

B. Subcontractor has reviewed the current project schedule and has confirmed delivery of all doors, frames, and hardware can meet or exceed current project schedule time frame.

C. Subcontractor to provide and complete all required mounting/hanging of doors and frames.

D. Subcontractor to provide and complete any and all touch up to the finish of the primed door and frames assembly.

E. This subcontractor is responsible to furnish and install all automatic door operators, including auto operator bollards. Include all testing as specified. Subcontractor to hire electrical subcontractor (if needed) to ensure fully operating system at no additional charge to the project. No additional funds will be procured past bid day for failutre to provide a complete operating system.

F. This subcontractor to review and ensure all pathways and pull strings are installed for all power and low voltage requirements for door systems complete. Failure to complete this process prior to installation of drywall, masonry, curtainwall, storefront systems, etc. will result in all rework cost being picked up by Door subcontractor complete.

G. Subcontractor to coordinate with Pepper to ensure flush wood doors are not delivered to site until all specification requirements including all of the following site parameters are met structure enclosed, weathertight, wet work complete in areas of install, permanent HVAC system is running and fluctuation of temperature is contained between 50 and 90 degrees Fahrenheit, humidity is between 25 and 55 percent, and manufacturers additional requirements are met.

H. Subcontractor to provide and install temporary unfinished wood slab door at each electrical room, data room, mechanical room, and all exterior locations (unless door is located in a storefront location at which occurrence the door would be provided and installed by BP 05). Doors shall be installed with temporary hardware consisting of a push bar unit. Temporary cores are to be provided by subcontractor as identified in this scope for these doors and will be installed by Pepper. Exterior doors shall be installed with weather striping and kick plates (both side of door and half the height of the door).

I. Subcontractor to provide the following temporary core system and turn over to Pepper Construction within two months of signing subcontract. The following items will not be returned and will remain with Pepper Construction at the end of the project. All the following are to be purchased through Oak Security Group (10640 E 59th Street, Suite 200 Indianapolis, IN 46236 Local: 317-585-9830)
   1. 20qty – 41P Series Padlock (630 Stainless Steel) 2” Shackle, Function (Key Retained) and Weather Cover
   2. 10qty – 21P Series Padlock (630 Stainless Steel), Shackle – 18” Cable, Function – Key Retained
   3. SFIC Cores
      a. 4qty – core pulling keys for list below
      b. 15qty – Master keys to fit all cores listed below
      c. 15qty – AZ Core w/ 20 keys
      d. 15qty – AZ1 Core w/ 20 keys
   4. Provide a Milwaukee Packout Modular 3-Drawer unit with temporary core (Model 48-22-8443)
   5. Provide 8 qty - Stanley Best ED211 ED Series Cylinder Equipment, Mortise Cylinder Wrench

J. This subcontractor is responsible to furnish and install all barrier and metal gates.

1.4 EXCLUSIONS

A. The following items have been specifically excluded from this bid package:
   1. Payment and performance bond.
   2. Full time, non-working safety professional.
   3. Installing any door frames located within masonry walls (by BP02B Building Masonry)
   4. Joint Sealants
   5. Dumpsters

1.5 ALLOWANCES

All allowances shall only be approved for use or deduction from subcontract by Pepper Construction through written notice. At the end or anytime at Pepper Constructions discretion any and all unused allowances can be deducted from the subcontract through a formal change order.

A. Composite cleaning crew: All subcontractors provide a laborer, on a weekly basis, to compile a composite crew that will be utilized for construction cleaning at the sole direction of Peppers' superintendent. Subcontractors will only be required to provide an individual only during the time the subcontractor or tiered subcontractors are performing work onsite. This shall be figured at 8 hours per week.

1.6 DESIGN ALTERNATES

1. Alternate #1: Site Aggregate Path Alternate.
2. Alternate #2: Playground Surfacing Alternate.
3. Alternate #3: Telescoping Stands and Retractable Audience Seating Alternate.
4. Alternate #4: Motor Operated Roller Shades Alternate.
5. Alternate #5: Area Rugs Alternate.

1.7 CONSTRUCTION ALTERNATES

1. Alternate #1: Site Concrete
2. Alternate #2: Joint Sealants, Acoustical Sealants, Firestopping

1.8 UNIT PRICES

A. Current Labor Rates (do not include overhead and profit.

1.9 BREAKOUTS:

A. Furnish and install Hollow Metal Doors and Frames (including hardware)

B. Furnish and Install Flush Wood Doors (including hardware)

C. Furnish and install automatic door operators

D. Temporary Cores

E. Barrier Gates

F. Metal Gates

PRODUCTS (Not Used)

PART 2 - EXECUTION (Not Used)

END OF SECTION 01 00 00

EXHIBIT B – Bid Package 17B – General Trades B (Accessories, Gym Equipment, Wall Protection)

1.1 PROJECT DRAWINGS & SPECIFICATION

A. Contract to include the following drawings for reference:
Bartholomew Consolidated School Corporation – New Elementary #12 – Maple Grove:

1. For a full listing of drawings and specifications reference Exhibit A Drawings and Specifications Logs.
2. Scope Specific Specifications:
   1) 00 Procurement and Contracting Requirements
   2) 01 General Requirements
   3) 06 64 00 Plastic Paneling
   4) 10 11 00 Visual Display Surfaces
   5) 10 11 46 Tackable Wall Covering
   6) 10 12 00 Display Cases
   7) 10 14 19 Dimensional Letter Signage
   8) 10 21 13 Toilet Compartments
   9) 10 21 23 Cubicle Curtains and Track
   10) 10 26 00 Wall and Door Protection
   11) 10 28 00 Toilet, Bath, and Laundry Accessories
   12) 10 43 13 Defibrillator Cabinets
   13) 10 44 13 Fire Extinguishers and Cabinets
   14) 10 51 13 Metal Lockers
   15) 11 31 00 Residential Appliances
   16) 11 62 00 Entertainment Equipment
   17) 11 66 23 Gymnasium Equipment
   18) 11 95 00 Kilns
   19) 12 66 00 Telescoping Stands

1.2 PROJECT SPECIFIC CLARIFICATIONS

A. See attached Exhibit B.1

1.3 SCOPE SPECIFIC CLARIFICATIONS

A. Subcontractor to review and confirm all inwall blocking requirements are noted on submittals. Subcontractor is fully responsible for marking out inwall blocking locations in filed. Failure to complete this process will result in subcontractor being held fully responsible for any back charges from remediation to go back and modify or install additional blocking.

B. Subcontractor to provide and install all wall and door protection systems complete including but not limited to sheets, trims, joint sealants (for locations between panels subcontractor to carry cost to color match sheets), primers, glues, corner guards, and rails.

C. Subcontractor to coordinate and ensure proper spacing is completed at expansion joints or other wall trims requiring wall protection to not run continuously.

D. Subcontractor to ensure wall protection is always transported win a flat manor, never rolled, or stored without proper support (i.e., sheet of ¾" plywood or other rigid sheet material).

E. Subcontractor to ensure all wall protection is stored in controlled temperature and humidity settings and all material is properly acclimated to building conditions prior to installation.

F. Subcontractor to ensure all trims are free of "burrs" or other sharp edges. These should be filed down to create a smooth surface.

G. Subcontractor to ensure finisher has provided clean, primed, smooth walls for proper install wall protection. Subcontractor prior to installation to identify any issues with substrates that need to be corrected prior to installation of wall protection.

H. Subcontractor is responsible for confirming for all electrified accessories in submittals identify electrical requirements including but not limited to amps/voltage, plug style, and length of cords. Subcontractor to coordinate with electrical subcontractor on these items.

I. Subcontractor to coordinate installation of mirrors based upon final centerline of light fixtures and plumbing fixtures to ensure all items are installed on the same centerline.

J. Coordinate with blocking subcontractor to confirm openings and support blocking allow for Fire cabinets to be installed clean and flush with wall type.

K. Subcontractor to provide and complete tagging (yearly inspection) just prior to substantial completion or directed by Pepper Superintendent depending on inspectors' requirements. Inspection and tagging should be completed by a certified company and person(s) example would include a company like Koorsen. Subcontractor to provide as part O&Ms certification document stating when the inspection occurred, quantity of fire extinguishers inspected and tagged, and company who completed this process.

L. Provide and coordinate turnover of keys with Pepper.

M. Provide and complete removal of all temporary coverings and labels in coordination with Pepper right before Substantial Completion. Contractor to complete all cleaning and polishing required from removal of temporary covering and labels.

N. Subcontractor to provide and complete required coordination with blocking contractor to confirm layout, elevations, and sizing of blocking for all items under this subcontract.

O. Subcontractor responsible for confirming finalized spacing for installation of lockers with other systems such as walls, ceilings, and casework. Subcontractor to provide any and all required filler strips.

P. Provide and complete all required touch up from install. Lockers that are dented or have deep scratches in them will not be accepted for install and must be replaced.

Q. Subcontractor to wipe down all systems after installation to ensure they are free and clean of any dust.

R. Subcontractor to install clocks provided by owner.

S. For markerboard(s) and tackboards, ensure units are free of scratches prior to installing. Units shall then be covered with builder board and then removed prior to final clean.

T. This scope of work includes a complete system fabrication of interior and exterior signage (decorative signs, dimensional letter signage, room identification signage, panel signage, etc.). This includes any anchors, hardware, concrete sleeves/inserts, welding, forming, coatings/paints, etc.

U. Any blocking for interior or exterior signage is to be coordinated with the associated substrate subcontractor. Said blocking is to be furnished and installed by the substrate subcontractor.

V. Any anchors or inserts integral to concrete, precast, or other non-gypsum wall systems (interior or exterior) are to be coordinated as part of the BIM process. Associated anchors or inserts are furnished as part of this subcontract. Installation locations and instructions/templates must be provided to the associated trade subcontractor and anchors and inserts provided with enough time for installation into associated systems.

W. Coordination with associated substrate subcontractors for anchor/insert coordination/installation and any post installed anchor means and methods are included in this scope of work.

X. Any anchors post installed into a wall system/installed at time of signage install are furnished and installed as part of this subcontract.

Y. All field measuring prior to fabrication of signage is included in this scope of work.

Z. All signage coatings per the project documents are included in this scope of work.

AA. Weep holes at inconspicuous locations where water may accumulate are included in this scope of work.

BB. Decorative grilles, frames, hardware, etc. are included in this scope of work.

CC. Protect all interior and exterior signage for the duration of construction and include any associated final cleaning of signage/removal of protective coatings.

DD. All aluminum and stainless-steel finishes for signage provided through this subcontract are included.

EE. Concealed gaskets, joint fillers, insulation, and flashing integral to the signage are to be furnished and installed with the signage as part of this subcontract.

FF. Any electrical requirements for signage where electrical service will be embedded in permanent construction (gypsum wall, concrete, precast, etc.) must be provided to electrical subcontractor in a timely manner so as not to delay the project schedule or create rework for other subcontractors.

GG. All connectors for signage are to be furnished as part of this subcontract and turned over to the electrical subcontractor for installation.

HH. Signage required to comply with design loads must have structural analysis calculations performed by a qualified professional engineer.

II. All adhesives, tapes, and other non-mechanical fasteners for room identification signage are included in this scope of work. Follow manufacturer recommendations for signage installation. All mounting types must meet performance requirements and are subject to the same signage warranty if adhesion fails.

JJ. Do not apply signage to any rated or security glazing. Signage applied to glazing must have a backplate installed.

KK. Evaluation reports for signage as defined in the project documents is included in this scope of work.

LL. Subcontractor shall coordinate installation of signage right before final clean of the building occurs.

MM. Subcontractor to coordinate sizing of all final MEP attachments to kiln(s).

NN. Subcontractor upon supply and install of residential equipment shall complete all water hook-ups, plugging power cords in, installing any surrounds, removal of all protective films, and perform cycle of items such as water dispensers/ice makers.

1.4 ALLOWANCES

*Allowance funding may be removed by Pepper Construction at any point within the project at the sole discretion of Pepper Construction. Funds that have already been agreed to and have been spent from an allowance are no longer subject to removal.

A. Composite cleaning crew: All subcontractors provide a laborer, on a weekly basis, to compile a composite crew that will be utilized for construction cleaning at the sole direction of Peppers' superintendent. Subcontractors will only be required to provide an individual only during the time the subcontractor or tiered subcontractors are performing work onsite. This shall be figured at 8 hours per week.

1.5 EXCLUSIONS

A. The following items have been specifically excluded from this bid package:
   1. Payment and performance bond.
   2. Full time, non-working safety professional.

1.6 DESIGN ALTERNATES

1. Alternate #1: Site Aggregate Path Alternate.
2. Alternate #2: Playground Surfacing Alternate.
3. Alternate #3: Telescoping Stands and Retractable Audience Seating Alternate.
4. Alternate #4: Motor Operated Roller Shades Alternate.
5. Alternate #5: Area Rugs Alternate.

1.7 CONSTRUCTION ALTERNATES

1. Alternate #1: Site Concrete
2. Alternate #2: Joint Sealants, Acoustical Sealants, Firestopping

1.8 UNIT PRICES

A. Current labor rates provided at time of bid. Updated rates to be provided each year/at time of updates.

1.9 POST AWARD NOTES

A. None.

PRODUCTS (Not Used)

PART 2 - EXECUTION (Not Used)

END OF SECTION 01 00 00

EXHIBIT B – Bid Package 18 – Gym Flooring

PART 1 - GENERAL

1.1 PROJECT DRAWINGS & SPECIFICATION

A. Contract to include the following drawings for reference
Bartholomew Consolidated School Corporation – New Elementary #12 – Maple Grove
A. For full listing of drawings and specifications reference Exhibit A Drawings and Specifications Logs.
B. Scope Specific Specifications:
1) 00 Procurement and Contracting Requirements
2) 01 General Requirements
3) 09 64 66 – Wood Athletic Flooring

1.2 PROJECT SPECIFIC CLARIFICATIONS

A. See attached Exhibit B.1

1.3 SCOPE SPECIFIC CLARIFICATIONS

A. Supply concrete depression details in a timely manner to not delay BP-02A Building and Site Concrete subcontractor.

B. Subcontractor to provide and complete testing of concrete to confirm it is within the tolerances identified in the project documents and material manufacture requirements.

C. Include high-moisture glues and adhesives in all floor areas covered under this scope of work. No exceptions.

D. Include all necessary floor preparation and moisture testing as described in the construction documents.

E. Include all mockups identified in the project documents. Any design review time of in place mockups is accounted for and no remobilizations will be submitted for this reason.

F. Subcontractor to provide and complete install of temporary flooring protection (plastic and ram board) in accordance with specifications and manufacturers requirements. Subcontractor to provide five additional plastic carpet protection rolls to Pepper to utilize after subcontractor has demobilized.

1.4 EXCLUSIONS

A. The following items have been specifically excluded from this bid package:
A. Payment and performance bond
B. Full time, non-working safety professional

1.5 ALLOWANCES

All allowances shall only be approved for use or deduction from subcontract by Pepper Construction through written notice. At the end or anytime at Pepper Constructions discretion any and all unused allowances can be deducted from the subcontract through a formal change order.

A. Composite cleaning crew: All subcontractors provide a laborer, on a weekly basis, to compile a composite crew that will be utilized for construction cleaning at the sole direction of Peppers' superintendent. Subcontractors will only be required to provide an individual only during the time the subcontractor or tiered subcontractors are performing work onsite. This shall be figured at 8 hours per week.

1.6 DESIGN ALTERNATES

A. Alternate #1: Site Aggregate Path Alternate.
B. Alternate #2: Playground Surfacing Alternate.
C. Alternate #3: Telescoping Stands and Retractable Audience Seating Alternate.
D. Alternate #4: Motor Operated Roller Shades Alternate.
E. Alternate #5: Area Rugs Alternate.

1.7 CONSTRUCTION ALTERNATES

A. Alternate #1: Site Concrete
B. Alternate #2: Joint Sealants, Acoustical Sealants, Firestopping

1.8 UNIT PRICES

A. Current Labor Rates (do not include overhead and profit.

1.8 BREAKOUT PRICING (For Accounting Purposes Only):

A. Hydraulic Cement Underlayment

B. Resilient Base and Accessories

C. Resilient Tile Flooring

D. Tile Carpeting

E. Machine Room Less Electric Traction Elevators (Flooring)

PRODUCTS (Not Used)

PART 2 - EXECUTION (Not Used)

END OF SECTION 01 00 00

EXHIBIT B – Bid Package 19 – Flooring

PART 1 - GENERAL

1.1 PROJECT DRAWINGS & SPECIFICATION

A. Contract to include the following drawings for reference
Bartholomew Consolidated School Corporation – New Elementary #12 – Maple Grove
A. For full listing of drawings and specifications reference Exhibit A Drawings and Specifications Logs.
B. Scope Specific Specifications:
1) 00 Procurement and Contracting Requirements
2) 01 General Requirements
3) 09 65 13 – Resilient Base and Accessories
4) 09 65 20 – Resilient Tile Flooring
5) 09 65 23 – Luxury Vinyl Tile Flooring
6) 09 67 23 – Resinous Flooring
7) 09 68 13 – Tile Carpeting
8) 11 62 00 – Entertainment Equipment (Partial)
9) 12 48 53 – Area Rugs (Alternate)
10) 26 05 44 – Sleeves and Sleeve Seals for Electrical Raceways and Cabling (Partial)

1.2 PROJECT SPECIFIC CLARIFICATIONS

A. See attached Exhibit B.1

1.3 SCOPE SPECIFIC CLARIFICATIONS

A. Furnish and install all base except for wood base (all product types across project).

B. Furnish and install all wall hard board at epoxy base.

C. Include minor floor preparation.

D. Include all mockups identified in the project documents.

E. Contract includes the furnish and install required for hydraulic cement underlayment scope including but not limited to the following items as shown on the project drawings and noted on project specifications:
A. Hydraulic cement underlayment
B. Reinforcement
C. Primer
D. Corrosion resistant coating
E. Surface sealer
F. Testing
G. Temporary protection

F. For all flooring transitions with hydraulic underlayment ease slope over 2 feet.

G. Subcontractor to provide and complete testing of concrete to confirm it is within the tolerances identified in the project documents and material manufacture requirements.

H. Include high-moisture glues and adhesives in all floor areas covered under this scope of work. No exceptions.

I. Include all necessary floor preparation and moisture testing as described in the construction documents.

J. Furnish and install all thresholds, transitions, edge guards, and reducers. This also includes flooring buildups from different thickness floorings that abut and transitions from any flooring/concrete to wood athletic flooring. Only exceptions are Schluter's integral to tile systems.

K. Furnish and install all edge strip transitions at door openings as indicated.

L. In locations where other trades materials meet up with this subcontractor's scope of work, it shall always be this subcontractor's responsibility to complete the Joint Sealant.

M. Subcontractor to provide and complete install of temporary flooring protection (plastic and ram board) in accordance with specifications and manufacturers requirements. Subcontractor to provide five additional plastic carpet protection rolls to Pepper to utilize after subcontractor has demobilized.

N. Furnish, install, and remove protection as necessary to protect adjacent material not receiving coatings as part of this subcontract. Failure to complete this process will result in all remediation required to correct damage from overspray being back charged to the subcontractor.

O. Subcontractor has included all surface preparation (including curing compound removal) and cleaning required for concrete surface treatment application.

P. This scope of work includes concrete surface treatment/sealing at all sealed concrete locations. Also included is protection of applied locations as outlined in the project documents.

Q. This scope of work includes detailing around all sleeves protruding through flooring.

R. This scope of work includes all flooring and accessories in 11 62 00 Entertainment Equipment specifications. This includes cove base, green vinyl flooring, and any accessories/components for a complete system.

1.4 EXCLUSIONS

A. The following items have been specifically excluded from this bid package:
   A. Payment and performance bond
   B. Full time, non-working safety professional

1.5 ALLOWANCES

All allowances shall only be approved for use or deduction from subcontract by Pepper Construction through written notice. At the end or anytime at Pepper Constructions discretion any and all unused allowances can be deducted from the subcontract through a formal change order.

A. Composite cleaning crew: All subcontractors provide a laborer, on a weekly basis, to compile a composite crew that will be utilized for construction cleaning at the sole direction of Peppers' superintendent. Subcontractors will only be required to provide an individual only during the time the subcontractor or tiered subcontractors are performing work onsite. This shall be figured at 8 hours per week.

B. Include a $10,000 allowance for miscellaneous flooring Work. Allowances must be pre-approved by Pepper Construction prior to proceeding with allowance work.

C. Include a $20,000 allowance for major floor leveling.

1.6 DESIGN ALTERNATES

A. Alternate #1: Site Aggregate Path Alternate.
B. Alternate #2: Playground Surfacing Alternate.
C. Alternate #3: Telescoping Stands and Retractable Audience Seating Alternate.
D. Alternate #4: Motor Operated Roller Shades Alternate.
E. Alternate #5: Area Rugs Alternate.

1.7 CONSTRUCTION ALTERNATES

A. Alternate #1: Site Concrete
B. Alternate #2: Joint Sealants, Acoustical Sealants, Firestopping

1.8 UNIT PRICES

A. Current Labor Rates (do not include overhead and profit.

1.8 BREAKOUT PRICING (For Accounting Purposes Only):

A. Hydraulic Cement Underlayment

B. Resilient Base and Accessories

C. Resilient Tile Flooring

D. Tile Carpeting

E. Sheet Carpeting

F. Machine Room Less Electric Traction Elevators (Flooring)

PRODUCTS (Not Used)

PART 2 - EXECUTION (Not Used)

END OF SECTION 01 00 00

EXHIBIT B – Bid Package 20 – Painting, Wall Coverings, and Sealed Concrete

PART 1 - GENERAL

1.1 PROJECT DRAWINGS & SPECIFICATION

A. Contract to include the following drawings for reference.

Bartholomew Consolidated School Corporation – New Elementary #12 – Maple Grove

1. For a full listing of drawings and specifications reference Exhibit A Drawings and Specifications Logs.
2. Scope Specific Specifications:
   1) 00 Procurement and Contracting Requirements
   2) 01 General Requirements
   3) 03 35 00 – Concrete Surface Treatment
   4) 06 40 23 Interior Architectural Woodwork (Partial)
   5) 08 31 13 Access Doors and Frames (Partial)
   6) 09 91 23 Interior Painting
   7) 09 96 00 High-Performance Coating
   8) 09 97 37 Green Screen Coating
   9) 11 62 00 Entertainment Equipment (Partial)
   10) 20 00 10 Common Work Results for Fire Suppression, Plumbing and HVAC (Partial)
   11) 20 00 50 Common Materials and Methods for Fire Suppression, Plumbing and HVAC (Partial)
   12) 27 11 00 Communications Equipment Room Fittings (Partial)

1.2 PROJECT SPECIFIC CLARIFICATIONS

A. See attached Exhibit B.1

1.3 SCOPE SPECIFIC CLARIFICATIONS

A. Subcontractor to provide fire cabinets and store all flammable materials under this contractor's scope.

B. Furnish, install, and remove protection as necessary to protect adjacent material from receiving coatings as part of this subcontract. Failure to complete this process will result in all remediation required to correct damage from overspray being back charged to the subcontractor.

C. Furnish, install, and remove "WET PAINT" signage.

D. Preparation of substrates including moisture testing is included in this subcontract.

E. This subcontract includes all surface preparation, block fillers, priming, staining, and surface treatment specified in the project documents unless explicitly noted to be excluded.

F. Except for the following exclusions, this subcontract includes the painting of all exposed surfaces on the project. The following are excluded: pre-finished items, concealed surfaces, finished metal surfaces (stainless steel or aluminum not called out to receive coating), operating parts, and labels.

G. Coordinate with other subcontractors for items to receive hardware, glass, etc. that must first be painted. If coordination does not occur, it is the responsibility of this subcontractor to remove and/or protect components during preparation and application of coating.

H. This subcontract includes both interior and exterior paint and coating systems as well as high-performance coatings.

I. This scope of work includes painting of interior architectural woodwork where indicated in the project documents. Shop finished items are the responsibility of BP-21 Millwork subcontractor.

J. This scope of work includes painting access doors/panels as indicated in the project documents.

K. Ensure all project installation requirements/field conditions are met prior to installation.

L. Testing as outlined in the specifications is included in this scope of work. Coordinate with testing agency to ensure timing requirements are met. Provide all test results from third party testing agency within 3 days of test occurring.

M. Overspray removal and cleaning is included in this scope of work.

N. Furnish and install all dry erase coatings complete.

O. Furnish and install all green screen coatings complete.

P. Surface preparation, cleaning, ventilation, and protection through remaining construction are included in this scope of work.

Q. This subcontract includes exterior painting including bollards and landscape posts with Tnemec coating system or equal per project documents.

R. This subcontract includes painting of structure as identified in the project documents.

S. BP-20 subcontractor includes cleaning of field welds and abraded areas of shop paints and painting exposed areas immediately after erecting hangers and supports for MEP systems. Use same materials as used for shop painting. This subcontract includes galvanized MEP surfaces as well.

T. BP-20 subcontractor to include painting of MEP insulation as outlined in the project documents. This excludes aluminum and stainless-steel insulation jackets.

U. This subcontract includes spot prime coating to match adjacent coat of marred surfaces of prime coated equipment and piping.

V. Coordinate with BC-10A HVAC and BC-11D - Access Controls & HVAC Rough-Ins/Pathways subcontractors for raceway conduit and junction box cover plate painting for HVAC DDC system.

W. Subcontract includes painting all surface mounted exposed conduit, raceways, boxes, and electrical equipment according to the project documents. Those which are not to be painted must be protected.

X. This subcontract includes cleaning damaged and disturbed areas on MEP systems, surface preparation, and touch-up/repair of coatings.

Y. This subcontract includes all paint for identification including necessary stencils. Including but not limited to rated wall assemblies. Coordinate with MEP subcontractors as required.

Z. This subcontract includes plywood backboard painting (including but not limited to data rooms, electrical rooms, and mechanical rooms). Ensure fire rated labels are protected from paint so the label remains complete and visible after painting.

AA. The subcontractor shall prime and paint all MEP systems (including but not limited to pipe, duct, conduits, and pathways) identified in project documents. Example this subcontract includes painting of all exposed EMT pathways for the fire alarm system as identified in the project documents.

BB. Subcontractor upon completion of painting stair systems to clean stair tread inserts to remove all "construction build up".

CC. Subcontractor has included all surface preparation (including curing compound removal) and cleaning required for concrete surface treatment application.

DD. This scope of work includes concrete surface treatment/sealing at all sealed concrete locations. Also included is protection of applied locations as outlined in the project documents.

EE. This scope of work includes detailing around all sleeves protruding through flooring.

FF. This scope of work includes painting of base at Cyclorama room.

1.4 EXCLUSIONS

A. The following items have been specifically excluded from this bid package:
   1. Payment and performance bond.
   2. Full time, non-working safety professional.

1.5 ALLOWANCES

All allowances shall only be approved for use or deduction from subcontract by Pepper Construction through written notice. At the end or anytime at Pepper Constructions discretion any and all unused allowances can be deducted from the subcontract through a formal change order.

A. Composite cleaning crew: All subcontractors provide a laborer, on a weekly basis, to compile a composite crew that will be utilized for construction cleaning at the sole direction of Peppers' superintendent. Subcontractors will only be required to provide an individual only during the time

the subcontractor or tiered subcontractors are performing work onsite. This shall be figured at 8 hours per week.

B. Include $20,000 touch-up and overtime allowance.

C. Include $20,000 punchlist/turnover additional touchup allowance.

1.6 DESIGN ALTERNATES

1. Alternate #1: Site Aggregate Path Alternate.
2. Alternate #2: Playground Surfacing Alternate.
3. Alternate #3: Telescoping Stands and Retractable Audience Seating Alternate.
4. Alternate #4: Motor Operated Roller Shades Alternate.
5. Alternate #5: Area Rugs Alternate.

1.7 CONSTRUCTION ALTERNATES

1. Alternate #1: Site Concrete
2. Alternate #2: Joint Sealants, Acoustical Sealants, Firestopping

1.8 UNIT PRICES

A. Current Labor Rates (do not include overhead and profit).

1.9 BREAKOUTS

A. Specialty Wall Coverings

B. Wall Painting

C. Structure and MEP painting

D. High-Performance Coatings

PRODUCTS (Not Used)

PART 2 - EXECUTION (Not Used)

END OF SECTION 01 00 00

EXHIBIT B – Bid Package 21 – Millwork

1.1 PROJECT DRAWINGS & SPECIFICATION

A. Contract to include the following drawings for reference:
Bartholomew Consolidated School Corporation – New Elementary #12 – Maple Grove:

1. For a full listing of drawings and specifications reference Exhibit A Drawings and Specifications Logs.
2. Scope Specific Specifications:
   1) 00 Procurement and Contracting Requirements
   2) 01 General Requirements
   3) 05 50 00 Metal Fabrications (Partial)
   4) 06 40 23 Interior Architectural Woodwork
   5) 07 92 00 Joint Sealants (Partial)
   6) 12 32 16 Manufactured Plastic-Laminated-Faced Casework
   7) 12 36 61 Solid Surface Countertops

1.2 PROJECT SPECIFIC CLARIFICATIONS

A. See attached Exhibit B.1

1.3 SCOPE SPECIFIC CLARIFICATIONS

A. Millwork subcontractor to furnish and install all steel framing and supports for millwork and millwork related items including countertops.

B. This scope of work includes coordination with Interior & Exterior Framing subcontractor for type and location of required in-wall blocking for millwork and millwork supports. Coordination of blocking must be completed in line with the project schedule. Additional costs for missed blocking due to failure to coordinate will not be paid.

C. Locate concealed framing, blocking, and reinforcements that support millwork by field measurements before being concealed and indicate measurements on shop drawings. Subcontractor will be responsible for visiting the site once framing is installed on each level (one trip per level) and marking out studs for location blocking is to be installed for casework. Coordination with inwall systems such as MEP rough-ins and pathways may result in modifications to standard blocking. These modifications shall be recorded by subcontractor and provided as As-Builts for the project.

D. Ensure fire-retardant-treated materials are properly labeled per the project documents.

E. All accessories and mounting equipment for a complete system for millwork scope items except for in-wall blocking are included in this scope of work. This includes but is not limited to shims, laminate, adhesives, stains, hanging strips, furring, hardware, etc.

F. Anchors at interior faces of exterior walls and at floors must be nonferrous-metal or hot-dip galvanized anchors.

G. All millwork prep, priming, and finishing should be completed at fabrication shop except for final touchup, cleaning, and polishing after installation. Disassemble components only as necessary for installation where shipment/installation constraints do not allow for complete units to be brought to site.

H. Interior architectural woodwork must be conditioned to installing space for no less than 72 hours prior to installation.

I. Installation of millwork components must be coordinated around the project schedule to ensure building climate meets requirements for millwork and to eliminate/minimize potential for damage to millwork. BC-21 Millwork contractor is responsible for protecting millwork and countertops supplied as part of this scope and removing/disposing of necessary protection prior to the completion of the project. All countertops have temporary ram board installed at a minimum.

J. Furnish and install all glazing in millwork.

K. Millwork scope includes all wood base furnished and installed. This includes installing finish and protective coatings.

L. Where millwork scope items (including countertops) are indicated to fit to or within other construction, verify field dimensions before fabrication. Coordinate fabrication schedule with construction progress and schedule to avoid delaying work.

M. Millwork subcontractor is responsible for furnishing and installing all plastic paneling, including necessary hardware/adhesives/accessories/etc. for a complete system.

N. Non-integral sealants (sealant joints that are accessible after installation of millwork/countertops) and sealants which are not structural to the millwork/countertop systems will be furnished and installed by BC-07 Joint Sealants subcontractor.

O. Substrate preparation for plastic paneling is included as part of this subcontract.

P. All accessories for countertops including sub tops, metal splines, grommets, and caps are included as part of this subcontract.

Q. Mockups indicated in the project documents are included as part of this subcontract.

R. Subcontractor to coordinate and complete all plumbing fixture cutouts with Plumbing subcontractor. For items requiring shop mounting (integral sinks for example), coordinate delivery with Plumbing subcontractor and provide necessary fabrication schedule information to Pepper and Plumbing subcontractor to avoid any delays in the project schedule. Coordinate with Pepper for all other countertop mounted accessories/appliances as accessible.

S. It is the responsibility of the Millwork subcontractor to cut (shop or field depending on project documents) all penetrations through countertops, backsplash, and other millwork components.

T. Subcontractor to deliver countertops oversized, field scribe and field cut.

U. The subcontractor shall ensure installation of countertops occurs prior to installation of backsplash is scheduled to occur or be required to pick up all back charges for delaying installation.

V. Subcontractor to ensure all sills are onsite and ready for installation after the first coat of paint is completed for each level. The subcontractor shall confirm if sills are being filed cut to size or cut at shop. If field measuring and cutting to size at shop coordinate with Pepper to set up dates to measure after gypsum is hung at each level.

W. The subcontractor shall provide and install builder board over all finished tops to protect from construction damage.

1.4 EXCLUSIONS

A. The following items have been specifically excluded from this bid package:
   1. Payment and performance bond.
   2. Full time, non-working safety professional.

1.5 ALLOWANCES

Allowance funding may be removed by Pepper Construction at any point within the project at the sole discretion of Pepper Construction. Funds that have already been agreed to and have been spent from an allowance are no longer subject to removal.

A. Composite cleaning crew: All subcontractors provide a laborer, on a weekly basis, to compile a composite crew that will be utilized for construction cleaning at the sole direction of Peppers' superintendent. Subcontractors will only be required to provide an individual only during the time the subcontractor or tiered subcontractors are performing work onsite. This shall be figured at 8 hours per week.

1.6 DESIGN ALTERNATES
   1. Alternate #1: Site Aggregate Path Alternate.
   2. Alternate #2: Playground Surfacing Alternate.
   3. Alternate #3: Telescoping Stands and Retractable Audience Seating Alternate.
   4. Alternate #4: Motor Operated Roller Shades Alternate.
   5. Alternate #5: Area Rugs Alternate.

1.7 CONSTRUCTION ALTERNATES
   1. Alternate #1: Site Concrete
   2. Alternate #2: Joint Sealants, Acoustical Sealants, Firestopping

1.8 UNIT PRICES

A. Current labor rates provided at time of bid. Updated rates to be provided each year/at time of updates.

1.9 POST AWARD NOTES

PRODUCTS (Not Used)

PART 2 - EXECUTION (Not Used)

END OF SECTION 01 00 00

EXHIBIT B – Bid Package 22 – Asphalt Paving

PART 1 - GENERAL

1.1 PROJECT DRAWINGS & SPECIFICATION

A. Contract to include the following drawings for reference.

Bartholomew Consolidated School Corporation – New Elementary #12 – Maple Grove

1. For full listing of drawings and specifications reference Exhibit A Drawings and Specifications Logs.
2. Scope Specific Specifications:
   1) 00 Procurement and Contracting Requirements
   2) 01 General Requirements
   3) 32 05 16 Aggregate Pavements
   4) 32 11 23 Granular Base
   5) 32 12 16 Asphalt Paving
   6) 32 17 23 Paving Markings

1.2 PROJECT SPECIFIC CLARIFICATIONS

A. See attached Exhibit B.1

1.3 SCOPE SPECIFIC CLARIFICATIONS

A. Paving contractor is responsible to check substrate prior to placing base for elevation and compaction.

B. Mix designs and subgrade material to be submitted within 10 days of contract.

C. Pavement markings layout to be submitted for approval prior to placement based on the project schedule so as not to delay the schedule.

D. Coring/patching for new/relocated signs that fall in new or existing asphalt to be included.

E. It will be this subcontractors' responsibility to protect the existing paved areas, sidewalks, curbs, landscaped areas to remain, etc. from damage. Any damage caused by this subcontractor's scope of work will need to be repaired at their expense. If damage is not repaired, then Pepper Construction will make necessary repairs and will back charge.

F. Include additional mobilization of coming back onsite prior to install of new curbs and asphalt to trim out damaged asphalt by saw cutting edge of asphalt.

G. Subcontractor to provide and complete patch back of all utility tie ins/taps where existing asphalt to remain it removed. Subcontractor at patch back locations to provide full depth asphalt matching of existing conditions.

H. Subcontractor to provide and complete all clean-up of excess asphalt left from paving process.

I. Provide as-built survey to confirm elevations are within tolerance as indicated in project documents.

J. Subcontractor is to include install and removal of temporary pavement markings. Any asphalt repairs necessary from temporary pavement marking removal is to be included in this subcontract.

K. This subcontract includes reinstall of all gutter drainage grilles and frames, manhole frames, and other utility frames in asphalt.

L. Pavement protection per project documents is included in this scope of work (10 days or until surface temperature is less than 140 degrees F).

M. Follow the more stringent of the manufacturer installation instructions and project document instructions. For pavement markings, pavement surfaces must have had at least 14 days to cure before application of markings.

N. Protect pavement markings per manufacturer specifications before allowing traffic over marked surfaces.

O. This subcontract includes aggregate base under asphalt pavements. Compacted subgrade to be provided by others.

P. This subcontract includes re-dress and fine grading of aggregate base under asphalt pavements prior to placement of binder course.

Q. This subcontract includes standard duty, heavy duty, and ROW asphalt binder, tack coat, and surface courses.

R. This subcontract includes wheel stops (ref detail 9/L600).

S. This subcontract includes site signage and associated foundations/footings (ref keynotes S01,S02,S03,S04,S05/L10X, detail 219/C800, detail 7/L601, and detail 6/L602).

T. The subcontractor will be responsible for all excess soil generated from BP-22 scope installation. Excess soils to be removed immediately.

1.4 EXCLUSIONS

A. The following items have been specifically excluded from this bid package:
1. Payment and performance bond.
2. Full time, non-working safety professional.
3. Site concrete
4. Aggregate base under site concrete
5. Soil stabilization
6. Playground surfacing

1.5 ALLOWANCES

All allowances shall only be approved for use or deduction from subcontract by Pepper Construction through written notice. At the end or anytime at Pepper Constructions discretion any and all unused allowances can be deducted from the subcontract through a formal change order.

A. Composite cleaning crew: All subcontractors provide a laborer, on a weekly basis, to compile a composite crew that will be utilized for construction cleaning at the sole direction of Peppers' superintendent. Subcontractors will only be required to provide an individual only during the time the subcontractor or tiered subcontractors are performing work onsite. This shall be figured at 8 hours per week. Value $_____

B. Asphalt replacement at construction entrances: Include allowance pricing for replacement (saw cutting, removal/disposal, and new install of asphalt system) at entire construction entrance footprint at North and South sides of project site. Value $20,000.

C. Heavy duty binder replacement at construction roads: $25,000.

1.6 DESIGN ALTERNATES

1. Alternate #1: Site Aggregate Path Alternate.
2. Alternate #2: Playground Surfacing Alternate.
3. Alternate #3: Telescoping Stands and Retractable Audience Seating Alternate.
4. Alternate #4: Motor Operated Roller Shades Alternate.
5. Alternate #5: Area Rugs Alternate.

1.7 CONSTRUCTION ALTERNATES

1. Alternate #1: Site Concrete
2. Alternate #2: Joint Sealants, Acoustical Sealants, Firestopping

1.8 UNIT PRICES

A. Current Labor Rates (do not include overhead and profit).

1.9 BREAKOUTS

A. Provide following rates:
   1. 2025
      a. Rate for single Mobilization/Demobilization (Based upon bringing delivery of equipment – paver, roller, and skid steer. Base equipment needed to perform paving). Value $_____
      b. Rate for stone base – tri-axle rate delivered to site. Value $_____
      c. Rate for Intermediate – tri-axle rate delivered to site. Value $_____
      d. Rate for Top lift – tri-axle rate delivered to site. Value $_____
      e. Rate for 8hr Day for placement. Value $_____
   2. 2026

a. Rate for single Mobilization/Demobilization (Based upon bringing delivery of equipment – paver, roller, and skid steer. Base equipment needed to perform paving). Value $_____
b. Rate for stone base – tri-axle rate delivered to site. Value $_____
c. Rate for Intermediate – tri-axle rate delivered to site. Value $_____
d. Rate for Top lift – tri-axle rate delivered to site. Value $_____
e. Rate for 8hr Day for placement. Value $_____

3. 2027
   a. Rate for single Mobilization/Demobilization (Based upon bringing delivery of equipment – paver, roller, and skid steer. Base equipment needed to perform paving). Value $_____
   b. Rate for stone base – tri-axle rate delivered to site. Value $_____
   c. Rate for Intermediate – tri-axle rate delivered to site. Value $_____
   d. Rate for Top lift – tri-axle rate delivered to site. Value $_____
   e. Rate for 8hr Day for placement. Value $_____
4. Aggregate Under Asphalt
5. Asphalt Paving
6. Pavement Markings/Striping, Wheel Stops, Site Signage

PRODUCTS (Not Used)

PART 2 - EXECUTION (Not Used)

END OF SECTION 01 00 00

EXHIBIT B – Bid Package 23 – Window Treatments

PART 1 - GENERAL

1.1 PROJECT DRAWINGS & SPECIFICATION

A. Contract to include the following drawings for reference.

Bartholomew Consolidated School Corporation – New Elementary #12 – Maple Grove

1. For full listing of drawings and specifications reference Exhibit A Drawings and Specifications Logs.
2. Scope Specific Specifications:
   1) 00 Procurement and Contracting Requirements
   2) 01 General Requirements
   3) 06 10 00 Miscellaneous Rough Carpentry
   4) 12 24 13 Roller Window Shades
   5) 26 05 00 Common Work Results for Electrical

1.2 PROJECT SPECIFIC CLARIFICATIONS

A. See attached Exhibit B.1

1.3 SCOPE SPECIFIC CLARIFICATIONS

A. Blocking for manual and electronic window shades is furnished and installed by BP-16A Interior and Exterior Framing, Sheathing, Gypsum, Blocking, and Finishing subcontractor. Information on location, size, type, etc. of blocking to be provided by BP-23 Window Treatments subcontractor. Information to be provided so as not to delay the project schedule.

B. All other trim including front fascia, endcap covers, recessed shade pocket, closure panel/wall clips, side channels, and bottom (sill) channels or angles are all furnished and installed as part of this scope of work.

C. Outside of items specifically noted to be by others, this subcontract includes all hardware, material, tools, supervision, and installation necessary for a complete window treatment system.

D. All window treatments shown in ceilings are to be independently supported from ceiling system. This subcontract includes furnish and install of support system.

E. All joint sealants required at window treatment trim, or edge of system to be furnished and installed by BP-07 Joint Sealants subcontractor. Joint sealants integral to the window treatment system (endcap cover to recessed shade pocket for example) are included in this scope of work.

F. Power to motorized window shades by BP-11A Electrical subcontractor. Final connections are included in this scope of work.

G. All control components material, installation, and integration are included in this scope of work for motorized window shades.

H. Follow batten and seam requirements outlined in the project documents for shade bands.

I. Cleaning and protection of window treatments is included in this scope of work.

J. This scope of work includes furnishing and installing a complete curtain and drape system at locations shown in the project documents. This includes but is not limited to drapery tracks and fabrics, textile trims, drape fabrication, mounting brackets, fasteners, samples, carriers, controls, mockups, etc.

K. Included in this scope of work is field measuring at all locations.

L. Testing and adjusting for window shades, curtains, and drapes is included in this scope of work.

M. Steam and dress down drapes for crease and wrinkle free installation.

1.4 EXCLUSIONS

A. The following items have been specifically excluded from this bid package:
   1. Payment and performance bond.
   2. Full time, non-working safety professional.

1.5 ALLOWANCES

All allowances shall only be approved for use or deduction from subcontract by Pepper Construction through written notice. At the end or anytime at Pepper Constructions discretion any and all unused allowances can be deducted from the subcontract through a formal change order.

A. Composite cleaning crew: All subcontractors provide a laborer, on a weekly basis, to compile a composite crew that will be utilized for construction cleaning at the sole direction of Peppers' superintendent. Subcontractors will only be required to provide an individual only during the time the subcontractor or tiered subcontractors are performing work onsite. This shall be figured at 8 hours per week.

1.6 DESIGN ALTERNATES

1. Alternate #1: Site Aggregate Path Alternate.
2. Alternate #2: Playground Surfacing Alternate.
3. Alternate #3: Telescoping Stands and Retractable Audience Seating Alternate.
4. Alternate #4: Motor Operated Roller Shades Alternate.
5. Alternate #5: Area Rugs Alternate.

1.7 CONSTRUCTION ALTERNATES

1. Alternate #1: Site Concrete
2. Alternate #2: Joint Sealants, Acoustical Sealants, Firestopping

1.8 UNIT PRICES

A. Current Labor Rates (do not include overhead and profit).

PRODUCTS (Not Used)

PART 2 - EXECUTION (Not Used)

END OF SECTION 01 00 00

EXHIBIT B – Bid Package 24 – Tiling

PART 1 - GENERAL

1.1 PROJECT DRAWINGS & SPECIFICATION

A. Contract to include the following drawings for reference
Bartholomew Consolidated School Corporation – New Elementary #12 – Maple Grove
1. For full listing of drawings and specifications reference Exhibit A Drawings and Specifications Logs.
2. Scope Specific Specifications:
1) 00 Procurement and Contracting Requirements
2) 01 General Requirements
3) 09 30 00 – Tiling

1.2 PROJECT SPECIFIC CLARIFICATIONS

A. See attached Exhibit B.1

1.3 SCOPE SPECIFIC CLARIFICATIONS

A. The following items are to be specifically included in this bid package:
1. Contract includes the furnish and install required for tiling scope including but not limited to the following items as shown on the project drawings and noted on project specifications:
a. Floor and wall tile
b. Trim units
c. Metal edge trims
d. Metal edge profiles at outside corners
e. Tile backing panels
f. Waterproofing membrane
g. Crack isolation membrane
h. Metal edge strips

2. Contractor to provide and complete install of all required backing panels at all tile locations.

3. Contractor to provide and complete install of all required tile adhesives, thin sets, and mounting materials.

4. Contractor to provide and complete install of all metal edge strips/Schluter transition trims both between tile and at outside (perimeter) tile locations.

5. Contractor to provide and complete all required cleaning of tile upon install being completed.

6. Contractor to provide and complete sealer scope for grout joints.

7. Contractor to provide and complete install of required temporary protection.

1.4 EXCLUSIONS

A. The following items have been specifically excluded from this bid package:
   1. Payment and performance bond.
   2. Full time, non-working safety professional.
   3. Shower inserts.
   4. Furnishing of access panels.
   5. Cement backer board at wall tile (by BP-16A)

1.5 ALLOWANCES

All allowances shall only be approved for use or deduction from subcontract by Pepper Construction through written notice. At the end or anytime at Pepper Constructions discretion any and all unused allowances can be deducted from the subcontract through a formal change order.

A. Composite cleaning crew: All subcontractors provide a laborer, on a weekly basis, to compile a composite crew that will be utilized for construction cleaning at the sole direction of Peppers' superintendent. Subcontractors will only be required to provide an individual only during the time the subcontractor or tiered subcontractors are performing work onsite. This shall be figured at 8 hours per week.

1.6 DESIGN ALTERNATES:
   1. Alternate #1: Site Aggregate Path Alternate.
   2. Alternate #2: Playground Surfacing Alternate.
   3. Alternate #3: Telescoping Stands and Retractable Audience Seating Alternate.
   4. Alternate #4: Motor Operated Roller Shades Alternate.
   5. Alternate #5: Area Rugs Alternate.

1.7 CONSTRUCTION ALTERNATES
   1. Alternate #1: Site Concrete
   2. Alternate #2: Joint Sealants, Acoustical Sealants, Firestopping

1.8 UNIT PRICES

A. Current Labor Rates (do not include overhead and profit).

1.8 BREAKOUT PRICING (For Accounting Purposes Only):

B. Current Labor Rates (without overhead and profit)

PRODUCTS (Not Used)

PART 2 - EXECUTION (Not Used)

END OF SECTION 01 00 00

EXHIBIT B – Bid Package 25 – Operable Partitions

PART 1 - GENERAL

1.1 PROJECT DRAWINGS & SPECIFICATION

A. Contract to include the following drawings for reference.

Bartholomew Consolidated School Corporation – New Elementary #12 – Maple Grove

1. For full listing of drawings and specifications reference Exhibit A Drawings and Specifications Logs.
2. Scope Specific Specifications:
   1) 00 Procurement and Contracting Requirements
   2) 01 General Requirements
   3) 06 10 00 Miscellaneous Rough Carpentry
   4) 10 22 38 Operable Panel Partitions
   5) 26 05 00 Common Work Results for Electrical

1.2 PROJECT SPECIFIC CLARIFICATIONS

A. See attached Exhibit B.1

1.3 SCOPE SPECIFIC CLARIFICATIONS

A. Blocking for operable partitions is furnished and installed by BP-16A Interior and Exterior Framing, Sheathing, Gypsum, Blocking, and Finishing subcontractor. Information on location, size, type, etc. of blocking to be provided by BP-25 Operable Partitions subcontractor. Information to be provided so as not to delay the project schedule.

B. All embedded components are furnished as part of this subcontract and must be supplied to the associated subcontractor in a timely manner to not cause delays to the project.

C. All dead loads of roofing, flooring, ceilings, etc. must be installed before operable partitions are installed, coordinate with associated trades.

D. This subcontract includes a complete system furnish and install including all trim pieces, rails, flooring rails and trims, etc.

E. Power to operable partitions by BP-11A Electrical subcontractor. Final connections are included in this scope of work.

F. All control components material, installation, and integration are included in this scope of work for operable partitions.

G. Included in this scope of work is field measuring at all locations.

H. Furnish and install of adjustable support system is included with this scope of work.

1.4 EXCLUSIONS

A. The following items have been specifically excluded from this bid package:
   1. Payment and performance bond.
   2. Full time, non-working safety professional.

1.5 ALLOWANCES

All allowances shall only be approved for use or deduction from subcontract by Pepper Construction through written notice. At the end or anytime at Pepper Constructions discretion any and all unused allowances can be deducted from the subcontract through a formal change order.

A. Composite cleaning crew: All subcontractors provide a laborer, on a weekly basis, to compile a composite crew that will be utilized for construction cleaning at the sole direction of Peppers' superintendent. Subcontractors will only be required to provide an individual only during the time the subcontractor or tiered subcontractors are performing work onsite. This shall be figured at 8 hours per week.

1.6 DESIGN ALTERNATES
   1. Alternate #1: Site Aggregate Path Alternate.
   2. Alternate #2: Playground Surfacing Alternate.
   3. Alternate #3: Telescoping Stands and Retractable Audience Seating Alternate.
   4. Alternate #4: Motor Operated Roller Shades Alternate.
   5. Alternate #5: Area Rugs Alternate.

1.7 CONSTRUCTION ALTERNATES
   1. Alternate #1: Site Concrete
   2. Alternate #2: Joint Sealants, Acoustical Sealants, Firestopping

1.8 UNIT PRICES

A. Current Labor Rates (do not include overhead and profit).

PRODUCTS (Not Used)

PART 2 - EXECUTION (Not Used)

END OF SECTION 01 00 00

BP 26 was removed

Pepper Construction
Tomorrow Transformed

EXHIBIT B – Bid Package 27 – Food Service Equipment

PART 1 - GENERAL

1.1 PROJECT DRAWINGS & SPECIFICATION

A. Contract to include the following drawings for reference.

Bartholomew Consolidated School Corporation – New Elementary #12 – Maple Grove

1. For full listing of drawings and specifications reference Exhibit A Drawings and Specifications Logs.
2. Scope Specific Specifications:
   1) 00 Procurement and Contracting Requirements
   2) 01 General Requirements
   3) 11 40 00 Food Service Equipment

1.2 PROJECT SPECIFIC CLARIFICATIONS

A. See attached Exhibit B.1

1.3 SCOPE SPECIFIC CLARIFICATIONS

A. Shop drawings showing all necessary work by others must be submitted in a timely manner so as not to delay other scopes of work (follow submittal schedule provided with schedule exhibit). This includes all curbs, sleeves, power, HVAC, plumbing, blocking, etc.

B. Submit with shop drawings a full list of components to be provided as part of this subcontract for others to install as well as any equipment requirements (hookup sizes/requirements, power requirements, etc.)

C. All components supplied under this subcontract but installed by others must be furnished in a timely manner so as not to delay installation by others.

D. All integral piping, ducting, and wiring for all components and equipment provided in this scope of work shall be completed under this scope of work. Final connections only shall be by others. Any equipment with pathways only which require additional work by others will result in a formal back charge to the BP-27 subcontractor.

E. All testing, balancing, and adjusting of components/equipment provided by this scope of work is included.

F. This subcontract includes a complete system furnish and install including all trim pieces, grommets, escutcheons, etc.

G. Included in this scope of work is field measuring at all locations.

H. Cleaning and restoration of finishes is included in this scope of work just prior to turnover to ownership.

1.4 EXCLUSIONS

A. The following items have been specifically excluded from this bid package:
   1. Payment and performance bond.
   2. Full time, non-working safety professional.

1.5 ALLOWANCES

All allowances shall only be approved for use or deduction from subcontract by Pepper Construction through written notice. At the end or anytime at Pepper Constructions discretion any and all unused allowances can be deducted from the subcontract through a formal change order.

A. Composite cleaning crew: All subcontractors provide a laborer, on a weekly basis, to compile a composite crew that will be utilized for construction cleaning at the sole direction of Peppers' superintendent. Subcontractors will only be required to provide an individual only during the time the subcontractor or tiered subcontractors are performing work onsite. This shall be figured at 8 hours per week. Value: $_____

1.6 DESIGN ALTERNATES
   1. Alternate #1: Site Aggregate Path Alternate.
   2. Alternate #2: Playground Surfacing Alternate.
   3. Alternate #3: Telescoping Stands and Retractable Audience Seating Alternate.
   4. Alternate #4: Motor Operated Roller Shades Alternate.
   5. Alternate #5: Area Rugs Alternate.

1.7 CONSTRUCTION ALTERNATES
   1. Alternate #1: Site Concrete
   2. Alternate #2: Joint Sealants, Acoustical Sealants, Firestopping

1.8 UNIT PRICES

A. Current Labor Rates (do not include overhead and profit).

PRODUCTS (Not Used)

PART 2 - EXECUTION (Not Used)

END OF SECTION 01 00 00

PROJECT SCHEDULE

Pepper Construction
Tomorrow Transformed

BCSC New Elementary 12 Schedule

Print Date: 6/18/2025
Data Date: 1/1/2024

Line	Task Number	Activity Name	Duration	Start	Finish	Actual start	Actual finish
1	0010	**Milestones**	**876d**	**01/02/24**	**06/07/27**		
2	0020	Project Award		01/02/24	01/02/24		
3	0030	Mobilization		09/26/25	09/26/25		
4	0050	Building Power Completion		04/23/26	04/23/26		
5	0040	Structural Completion		07/14/26	07/14/26		
6	0060	Building Enclosure		09/21/26	09/21/26		
7	0070	Sitework Completion		12/01/26	12/01/26		
8	0080	Substantial Completion		04/16/27	04/16/27		
9	0090	Final Completion		06/07/27	06/07/27		
10	0091	**Pre-Construction**	**360d**	**07/03/24**	**12/01/25**		
11	0100	**Document Development**	**232d**	**07/03/24**	**06/02/25**		
12	0101	Schematic Design	60d	07/03/24	09/26/24 *		
13	0102	Design Development	96d	09/27/24	02/12/25 *		
14	0112	50% DD's Received		01/24/25	01/24/25 *		
15	0103	Construction Documents	77d	02/12/25	05/30/25 *		
16	2480	90% CD's Received		05/16/25	05/16/25		
17	0130	100% CD's Received		06/02/25	06/02/25		
18	2241	**Budgetting**	**126d**	**02/13/25**	**08/12/25**		

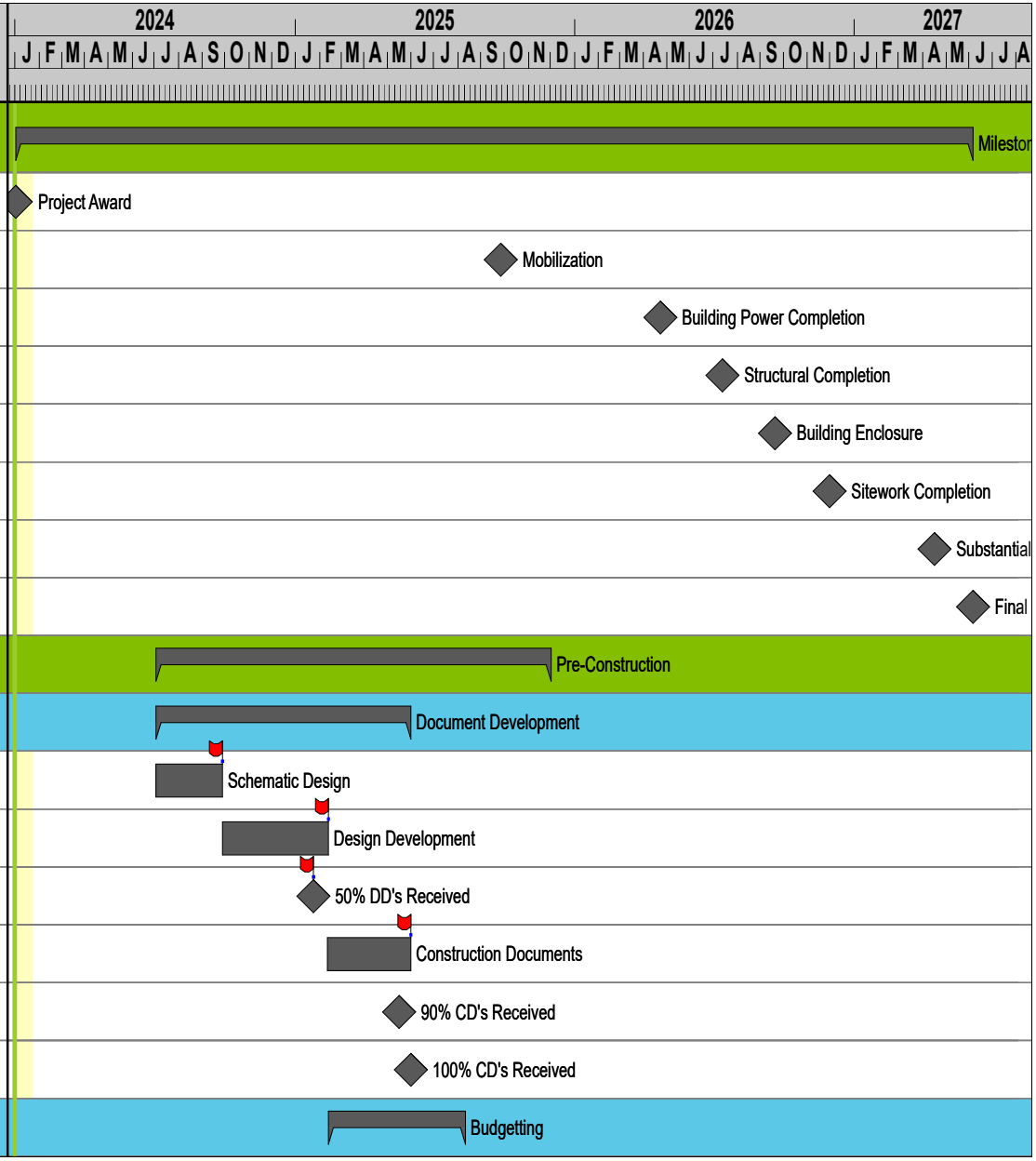

Revision Number:
Revision Comments:
Revision Date:

BCSC New Elementary 12 Schedule

Print Date: 6/18/2025
Data Date: 1/1/2024

Line	Task Number	Activity Name	Duration	Start	Finish	Actual start	Actual finish
19	2340	100% DD Budget	20d	02/13/25	03/12/25		
20	2350	GMP Creation	6d	07/03/25	07/11/25		
21	2360	GMP to BCSC/Review	21d	07/14/25	08/11/25		
22	2370	Executed GMP		08/12/25	08/12/25		
23	**0113**	**Design Investigation**	**15d**	**02/13/25**	**03/05/25**		
24	0104	Soils Testing and Analysis (Design)	15d	02/13/25	03/05/25		
25	**0120**	**Permiting**	**128d**	**06/02/25**	**12/01/25**		
26	0140	Construction Design Release (State)	30d	06/02/25	07/14/25		
27	0150	Fire Department Permit	30d	06/02/25	07/14/25		
28	0151	Fire Suppression System (State)	30d	10/20/25	12/01/25		
29	0160	Right of Way Permit (City)	30d	06/02/25	07/14/25		
30	2420	Improvement Location Permit (City) Preliminary Review (CDR in Hand Before Issuing)	30d	06/02/25	07/14/25		
31	0590	Improvement Location Permit (City) (Final Issuance)	10d	07/15/25	07/28/25		
32	0600	Building Sewer Lateral Permit (Columbus City Utilities)	30d	06/02/25	07/14/25		
33	0610	Sanitary Sewer Facility Permit (Columbus City Utilities)	30d	06/02/25	07/14/25		
34	0620	Stormwater Drainage Permit (City)	30d	06/02/25	07/14/25		
35	0630	DTCE Commercial Building Permit (City)	30d	06/02/25	07/14/25		

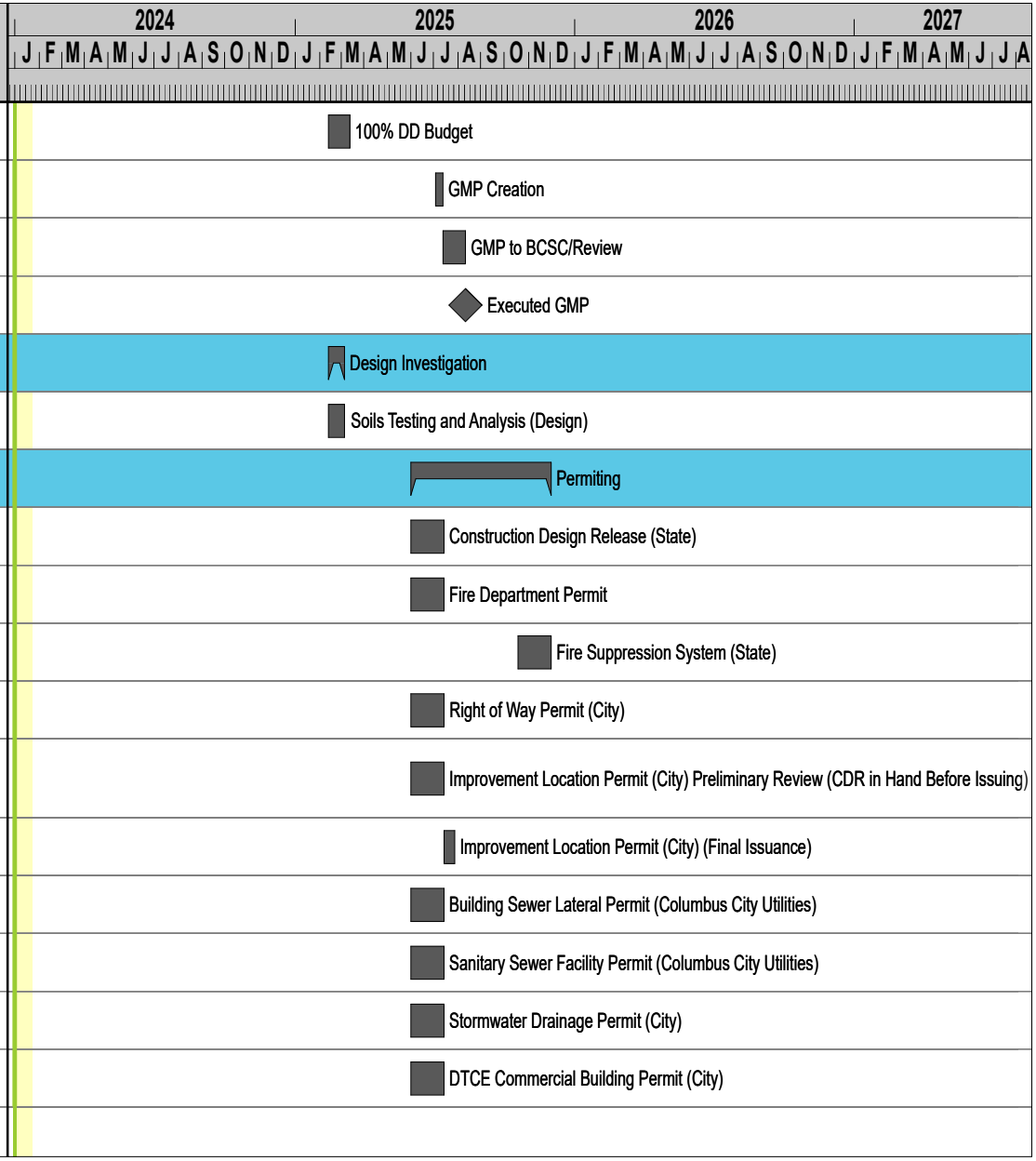

Revision Number:
Revision Comments:
Revision Date:

BCSC New Elementary 12 Schedule

Print Date: 6/18/2025
Data Date: 1/1/2024

Line	Task Number	Activity Name	Duration	Start	Finish	Actual start	Actual finish
36	1220	Elevator Permit (State)	30d	06/02/25	07/14/25		
37	**0520**	**Investigation**	**24d**	**06/06/25**	**07/10/25**		
38	**0530**	**UUDPP**	**24d**	**06/06/25**	**07/10/25**		
39	0540	Public and Private Locates	3d	06/06/25 *	06/10/25		
40	0560	Potholing and Data Point Capture	10d	06/11/25	06/24/25		
41	0550	Drone Flight to Capture Locates	1d	06/25/25	06/25/25		
42	0570	Modeling	10d	06/26/25	07/10/25		
43	**0161**	**Procurement**	**434d**	**02/03/25**	**10/13/26**		
44	**0170**	**Bidding**	**107d**	**02/03/25**	**07/02/25**		
45	0700	Create Bid Packages and Div 00 and 01 Documents	54d	02/03/25 *	04/17/25		
46	2380	Scope Writing	15d	05/16/25	06/06/25		
47	0680	Prequalification for Bidders	40d	04/18/25	06/13/25		
48	0690	ITB Advertisement 1		06/02/25 *	06/02/25		
49	2490	ITB Advertisement 2		06/09/25	06/09/25		
50	0670	ITB Advertisement 3		06/16/25	06/16/25		
51	0650	Set Up Plans and Specs for Bidders		06/02/25	06/02/25		
52	0640	Update and Upload Bid Packages and Documents to Plans and Specs	11d	06/02/25	06/16/25		
53	0641	Deadline for Pepper Prequal Submission		06/17/25	06/17/25		

Revision Number:
Revision Comments:
Revision Date:

BCSC New Elementary 12 Schedule

Print Date: 6/18/2025

Data Date: 1/1/2024

Line	Task Number	Activity Name	Duration	Start	Finish	Actual start	Actual finish
54	0642	Pre-Bid Meeting		06/11/25 *	06/11/25		
55	0643	Issue Addendum 1		06/10/25 *	06/10/25		
56	0644	Issue Addendum 2		06/17/25 *	06/17/25		
57	0710	Bid Day 1		06/24/25 *	06/24/25		
58	0720	Review Bids and Recommend to BCSB	5d	06/24/25	06/30/25		
59	0721	Bid Day 2		06/26/25 *	06/26/25		
60	0722	Review Bids and Recommend to BCSB	5d	06/26/25	07/02/25		
61	**0180**	**Scope and Award Packages**	**56d**	**08/12/25**	**10/30/25**		
62	**0740**	**BD-1 Long Lead and Eary Start Subcontracts**	**28d**	**08/12/25**	**09/22/25**		
63	1100	BP03 - Precast		08/12/25	08/12/25		
64	1120	BP04 - Structural and Miscellaneous Steel		08/18/25	08/18/25		
65	1050	BP11 - Electrical/Low Voltage/Security/Fire Alarm/HVAC and Door Rough		08/26/25	08/26/25		
66	1110	BP05 - Glass/Glazing and Metal Panels		09/02/25	09/02/25		
67	1140	BP08 - Elevator		09/04/25	09/04/25		
68	1230	BP12 - Fire Suppression		09/08/25	09/08/25		
69	1310	BP02B - Masonry		09/10/25	09/10/25		
70	1240	BP06 - Roofing and Flashing		09/12/25	09/12/25		

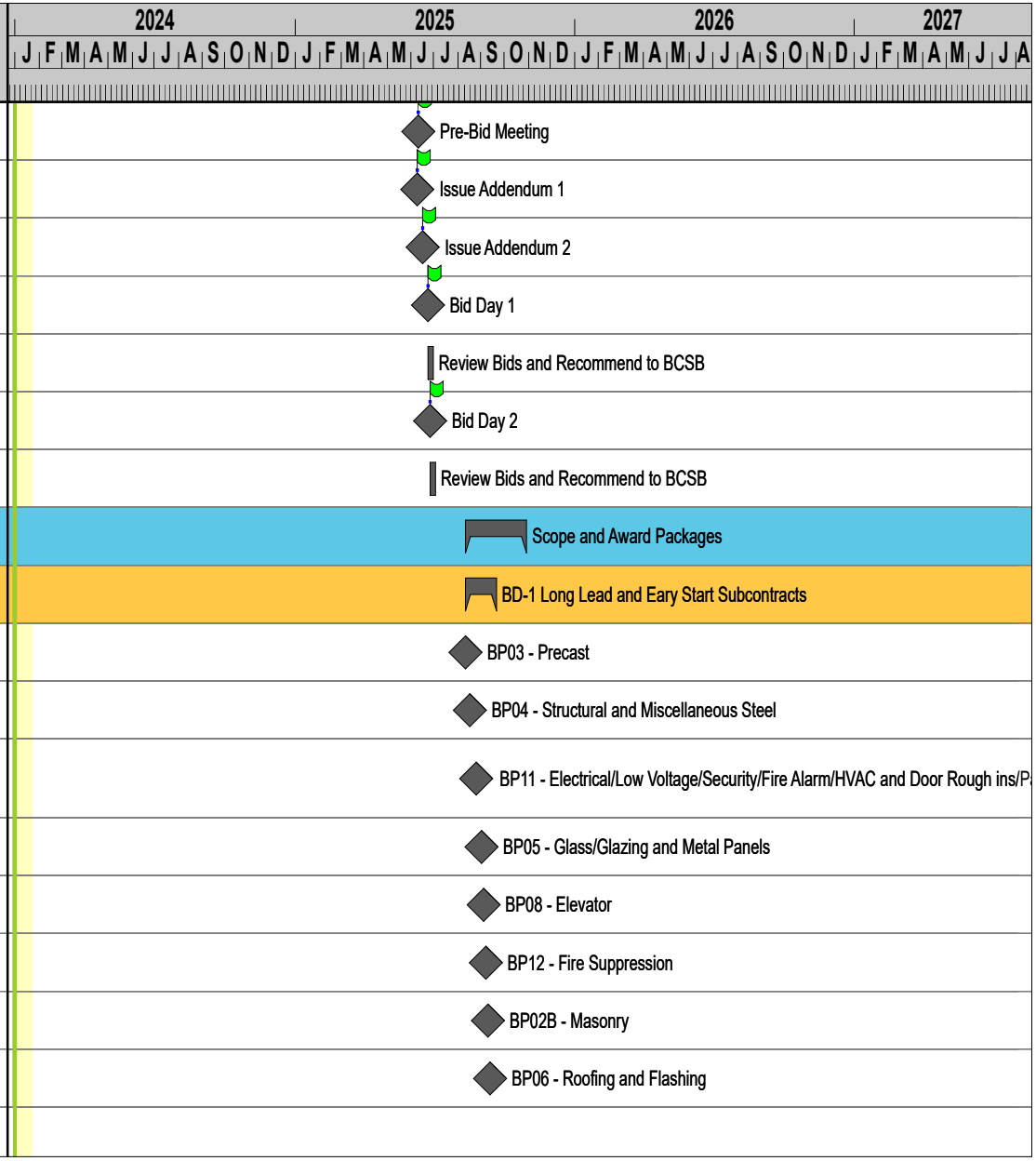

Revision Number:

Revision Comments:

Revision Date:

BCSC New Elementary 12 Schedule

Print Date: 6/18/2025
Data Date: 1/1/2024

Line	Task Number	Activity Name	Duration	Start	Finish	Actual start	Actual finish
71	1330	BP16A - Interior and Exterior Framing, Sheathing, Gypsum, Blocking, and Finishing		09/16/25	09/16/25		
72	0779	BP16B - Ceilings		09/18/25	09/18/25		
73	1290	BP07 - Joint Sealants, Firestopping, Dampproofing and Waterproofing, and Air		09/22/25	09/22/25		
74	0750	BD-2 Subcontracts	54d	08/14/25	10/30/25		
75	1060	BP01 - Earthwork and Site Utilities		08/14/25	08/14/25		
76	1090	BP10 - HVAC and Geothermal		08/20/25	08/20/25		
77	1130	BP02A - Building and Site Concrete		08/22/25	08/22/25		
78	1080	BP09 - Plumbing		08/28/25	08/28/25		
79	0751	BP27 - Foodservice Equipment		09/24/25	09/24/25		
80	1250	BP22 - Asphalt		09/26/25	09/26/25		
81	1270	BP14 - Playground Surfacing and Equipment		09/30/25	09/30/25		
82	1260	BP26 - Spray Foam		10/02/25	10/02/25		
83	1300	BP25 - Operable Partitions		10/06/25	10/06/25		
84	1340	BP24 - Tiling		10/08/25	10/08/25		
85	2430	BP23 - Window Treatments		10/10/25	10/10/25		
86	0762	BP21 - Millwork		10/14/25	10/14/25		
87	0763	BP20 - Painting, Wall Coverings, and Sealed		10/16/25	10/16/25		

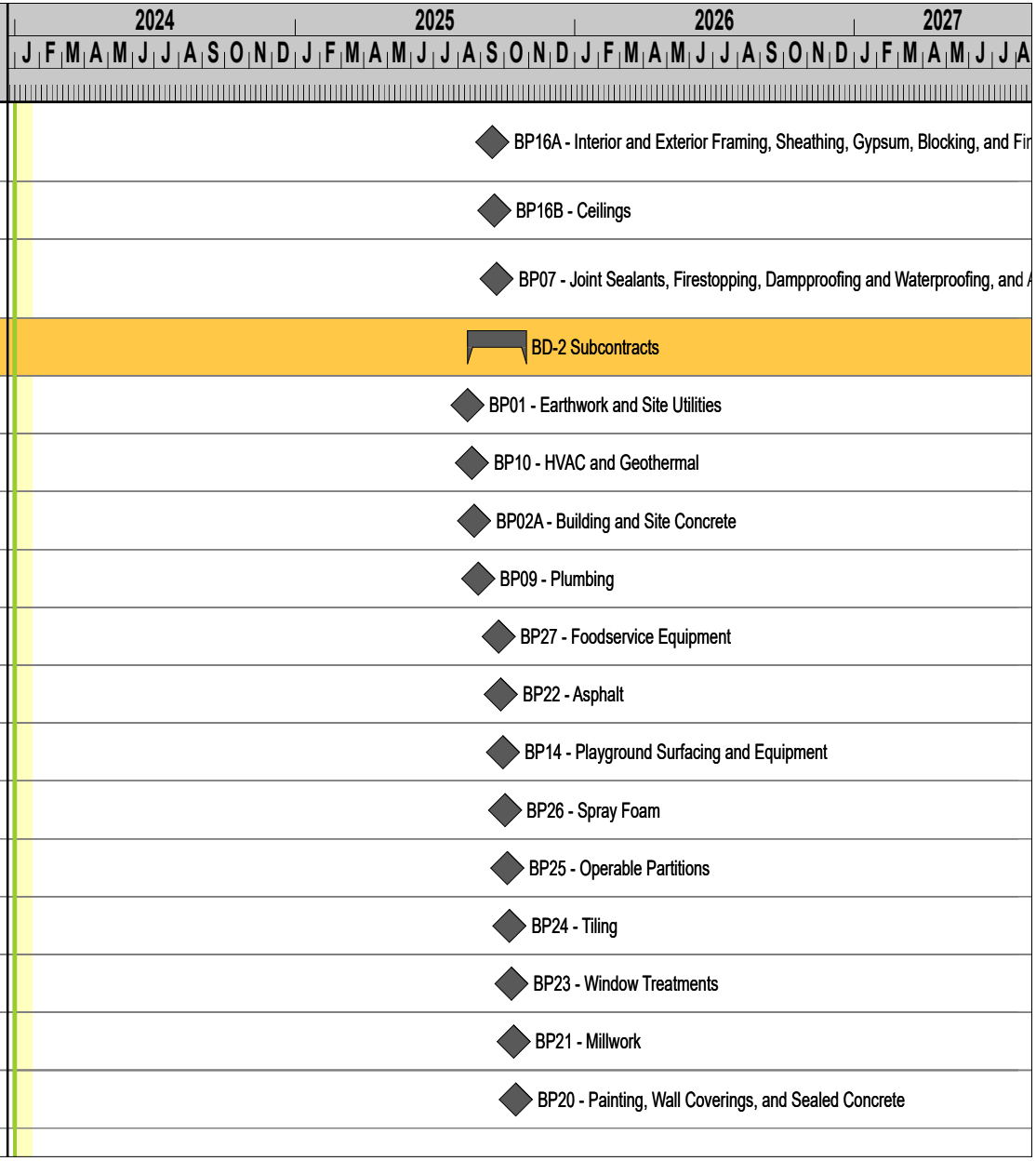

Revision Number:
Revision Comments:
Revision Date:

BCSC New Elementary 12 Schedule

Print Date: 6/18/2025
Data Date: 1/1/2024

Line	Task Number	Activity Name	Duration	Start	Finish	Actual start	Actual finish
88	0765	BP19 - Flooring		10/20/25	10/20/25		
89	0766	BP17A - General Trades A (DFH)		10/22/25	10/22/25		
90	0767	BP17B - General Trades B (Accessories, Gym Equipment, Wall Protection)		10/24/25	10/24/25		
91	0769	BP18 - Gym Flooring		10/28/25	10/28/25		
92	0789	BP13 - Landscape and Site Furnishings		10/30/25	10/30/25		
93	**0190**	**Submittal Preparation**	**76d**	**08/12/25**	**11/26/25**		
94	**1150**	**BD-01 Submittals**	**48d**	**08/12/25**	**10/17/25**		
95	1160	Precast	20d	08/12/25	09/09/25		
96	1350	Structural and Miscellaneous Steel	20d	08/18/25	09/15/25		
97	1380	Electrical/Low Voltage/Security/Fire Alarm/HVAC and Door Rough	20d	08/26/25	09/23/25		
98	1410	Glass/Glazing and Metal Panels	20d	09/02/25	09/29/25		
99	1420	Elevator	20d	09/04/25	10/01/25		
100	1430	Fire Suppression	20d	09/08/25	10/03/25		
101	1460	Masonry	20d	09/10/25	10/07/25		
102	1470	Roofing and Flashing	20d	09/12/25	10/09/25		
103	1490	Interior and Exterior Framing, Sheathing, Gypsum, Blocking, and Finishing	20d	09/16/25	10/13/25		
104	1640	Ceilings	20d	09/18/25	10/15/25		

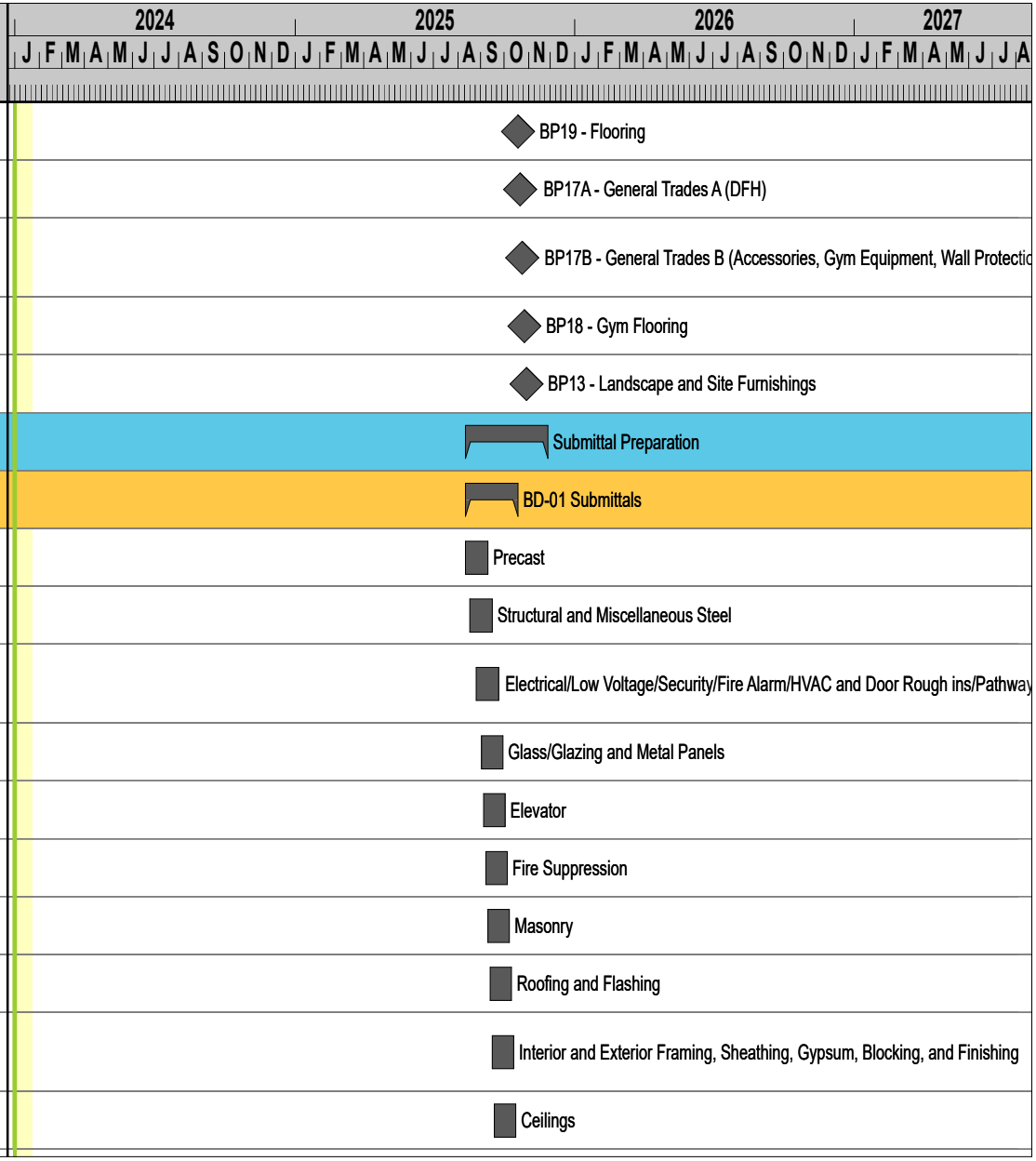

Revision Number:
Revision Comments:
Revision Date:

BCSC New Elementary 12 Schedule

Print Date: 6/18/2025
Data Date: 1/1/2024

Line	Task Number	Activity Name	Duration	Start	Finish	Actual start	Actual finish
105	1530	Joint Sealants, Firestopping, Dampproofing and Waterproofing, and Air Barriers	20d	09/22/25	10/17/25		
106	**1450**	**BD-02 Submittals**	**74d**	**08/14/25**	**11/26/25**		
107	1360	Earthwork and Site Utilities	20d	08/14/25	09/11/25		
108	1400	HVAC and Geothermal	20d	08/20/25	09/17/25		
109	1370	Building and Site Concrete	20d	08/22/25	09/19/25		
110	1390	Plumbing	20d	08/28/25	09/25/25		
111	1451	Foodservice Equipment	20d	09/24/25	10/21/25		
112	1480	Asphalt	20d	09/26/25	10/23/25		
113	1500	Playground Surfacing and Equipment	20d	09/30/25	10/27/25		
114	1510	Spray Foam	20d	10/02/25	10/29/25		
115	1540	Operable Partitions	20d	10/06/25	10/31/25		
116	1550	Tiling	20d	10/08/25	11/04/25		
117	2460	Window Treatments	20d	10/10/25	11/06/25		
118	1570	Millwork	20d	10/14/25	11/10/25		
119	1580	Painting, Wall Coverings, and Sealed Concrete	20d	10/16/25	11/12/25		
120	1590	Flooring	20d	10/20/25	11/14/25		
121	1600	General Trades A (DFH)	20d	10/22/25	11/18/25		

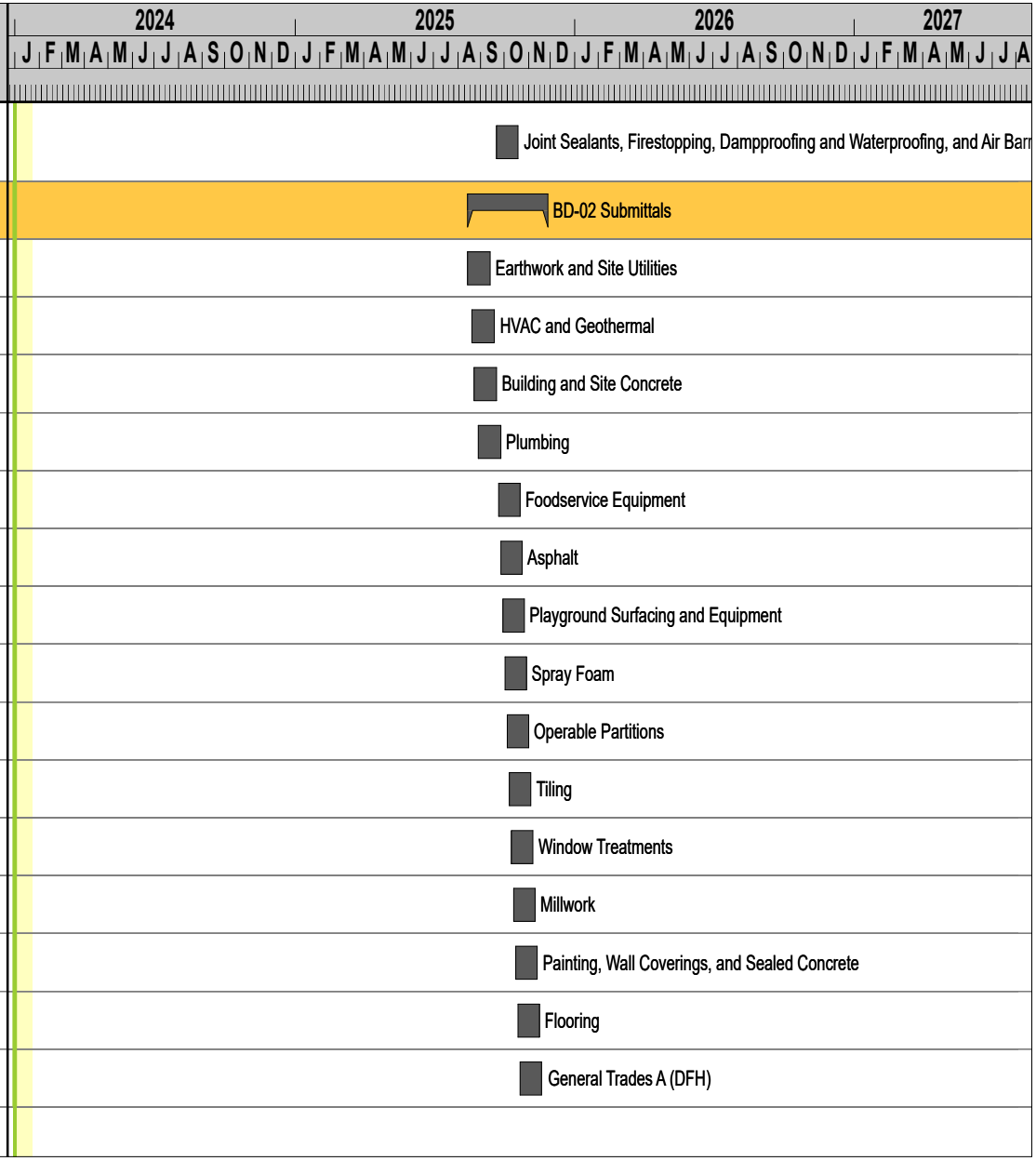

Revision Number:
Revision Comments:
Revision Date:

BCSC New Elementary 12 Schedule

Print Date: 6/18/2025
Data Date: 1/1/2024

Line	Task Number	Activity Name	Duration	Start	Finish	Actual start	Actual finish
122	1610	General Trades B (Accessories, Gym Equipment, Wall Protection)	20d	10/24/25	11/20/25		
123	1630	Gym Flooring	20d	10/28/25	11/24/25		
124	1650	Landscape and Site Furnishings	20d	10/30/25	11/26/25		
125	**0200**	**Submittal Review and Revisions**	**66d**	**09/10/25**	**12/11/25**		
126	**1180**	**BD-01 Submittal Review and Approval**	**38d**	**09/10/25**	**10/31/25**		
127	1170	Precast	10d	09/10/25	09/23/25		
128	1670	Structural and Miscellaneous Steel	10d	09/16/25	09/29/25		
129	1700	Electrical/Low Voltage/Security/Fire Alarm/HVAC and Door Rough ins/Pathways	10d	09/24/25	10/07/25		
130	1730	Glass/Glazing and Metal Panels	10d	09/30/25	10/13/25		
131	1740	Elevator	10d	10/02/25	10/15/25		
132	1750	Fire Suppression	10d	10/06/25	10/17/25		
133	1770	Masonry	10d	10/08/25	10/21/25		
134	1780	Roofing and Flashing	10d	10/10/25	10/23/25		
135	1800	Interior and Exterior Framing, Sheathing, Gypsum, Blocking, and Finishing	10d	10/14/25	10/27/25		
136	1271	Ceilings	10d	10/16/25	10/29/25		
137	1840	Joint Sealants, Firestopping, Dampproofing and Waterproofing, and Air Barriers	10d	10/20/25	10/31/25		
138	**1181**	**BD-02 Submittal Review and Approval**	**64d**	**09/12/25**	**12/11/25**		

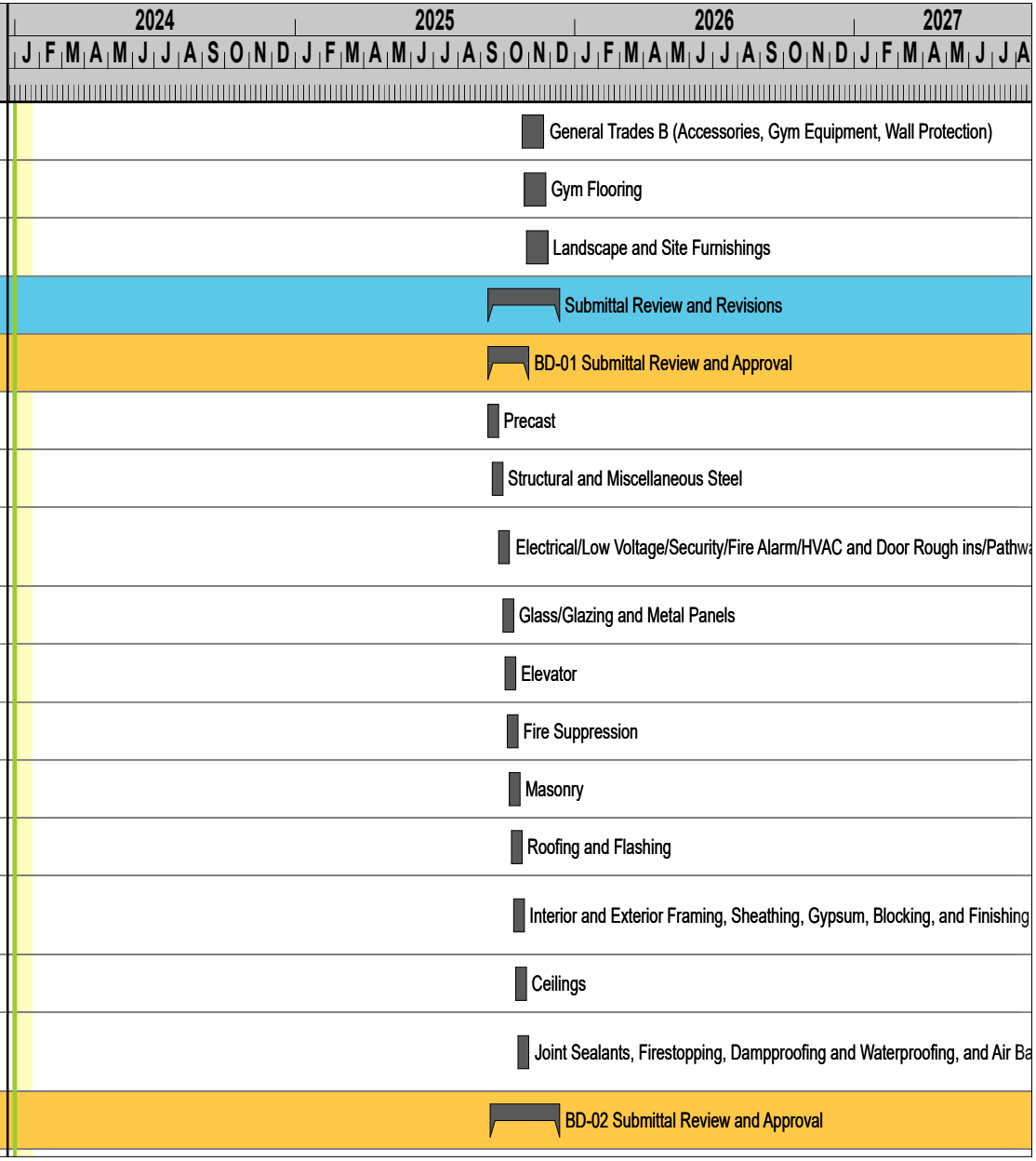

Revision Number:
Revision Comments:
Revision Date:

BCSC New Elementary 12 Schedule

Print Date: 6/18/2025
Data Date: 1/1/2024

Line	Task Number	Activity Name	Duration	Start	Finish	Actual start	Actual finish
139	1680	Eathwork and Site Utilities	10d	09/12/25	09/25/25		
140	1720	HVAC and Geothermal	10d	09/18/25	10/01/25		
141	1690	Building and Site Concrete	10d	09/22/25	10/03/25		
142	1710	Plumbing	10d	09/26/25	10/09/25		
143	1182	Foodservice Equipment	10d	10/22/25	11/04/25		
144	1790	Asphalt	10d	10/24/25	11/06/25		
145	1810	Playground Surfacing and Equipment	10d	10/28/25	11/10/25		
146	1820	Spray Foam	10d	10/30/25	11/12/25		
147	1850	Operable Partitions	10d	11/03/25	11/14/25		
148	1860	Tiling	10d	11/05/25	11/18/25		
149	2470	Window Treatments	10d	11/07/25	11/20/25		
150	1201	Millwork	10d	11/11/25	11/24/25		
151	1211	Painting, Wall Coverings, and Sealed Concrete	10d	11/13/25	11/26/25		
152	1221	Flooring	10d	11/17/25	12/01/25		
153	1231	General Trades A (DFH)	10d	11/19/25	12/03/25		
154	1241	General Trades B (Accessories, Gym Equipment, Wall Protection)	10d	11/21/25	12/05/25		
155	1261	Gym Flooring	10d	11/25/25	12/09/25		
156	1281	Landscape and Site Furnishings	10d	11/28/25	12/11/25		

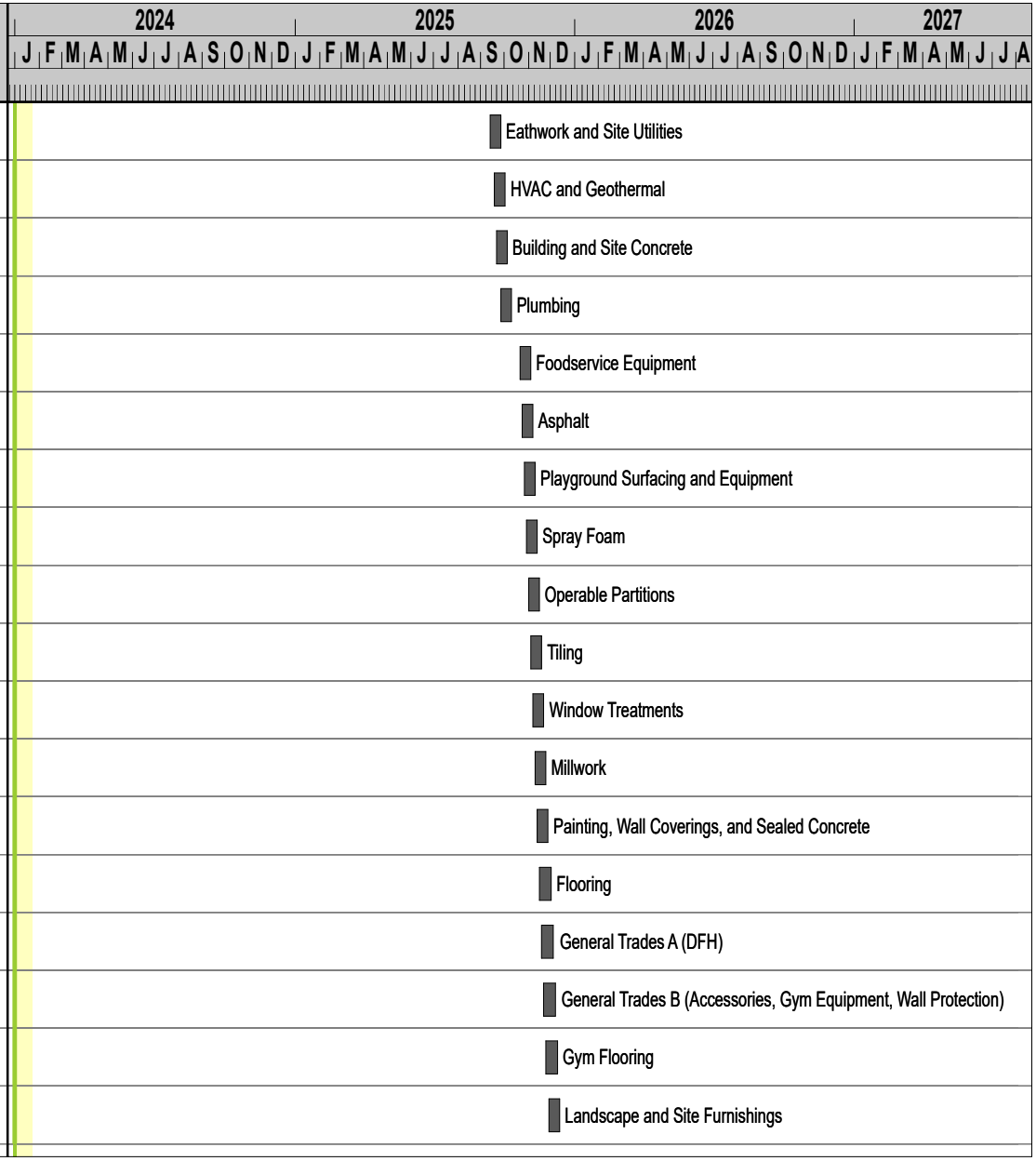

Revision Number:
Revision Comments:
Revision Date:

BCSC New Elementary 12 Schedule

Print Date: 6/18/2025
Data Date: 1/1/2024

Line	Task Number	Activity Name	Duration	Start	Finish	Actual start	Actual finish
157	0210	Fabrication/Lead Time/Delivery	270d	09/24/25	10/13/26		
158	0211	Long Lead/Early Start Fabrication	270d	09/24/25	10/13/26		
159	0212	Precast	130d	09/24/25	03/27/26		
160	0222	Structural Steel	40d	09/30/25	11/24/25		
161	0213	Stairs	60d	09/30/25	12/23/25		
162	0214	AHU's	225d	10/02/25	08/18/26		
163	0225	Geothermal Vault Equipment	60d	10/02/25	12/26/25		
164	0224	Geothermal Well Pumps/Equipment	120d	10/02/25	03/23/26		
165	1870	Transformers	260d	10/08/25	10/13/26		
166	0223	Plumbing Pumps	80d	10/10/25	02/03/26		
167	0233	Boilers	60d	10/10/25	01/06/26		
168	0226	Metal Panels	80d	10/14/25	02/05/26		
169	0217	Curtainwall	60d	10/14/25	01/08/26		
170	0215	Elevator	80d	10/16/25	02/09/26		
171	0216	Fire Pump	80d	10/20/25	02/11/26		
172	0218	Demountable Partitions	60d	11/17/25	02/11/26		
173	0219	UG MEP Fabrication/Procurement	15d	12/22/25	01/13/26		
174	0229	L1 MEP OH Fabrication	40d	02/04/26	03/31/26		

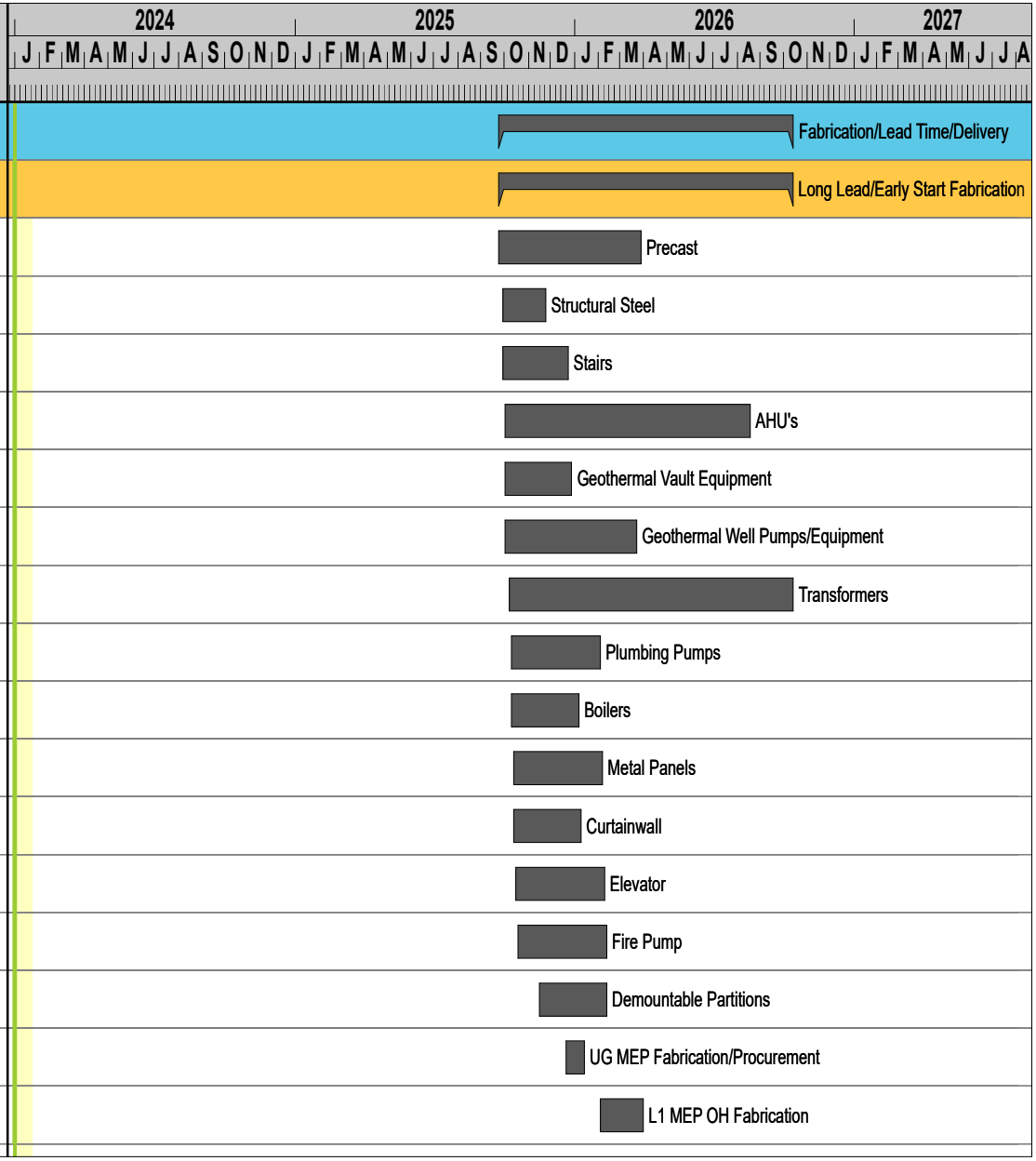

Revision Number:
Revision Comments:
Revision Date:

BCSC New Elementary 12 Schedule

Print Date: 6/18/2025
Data Date: 1/1/2024

Line	Task Number	Activity Name	Duration	Start	Finish	Actual start	Actual finish
175	0239	L2 MEP OH Fabrication	40d	03/18/26	05/12/26		
176	**0220**	**BIM**	**110d**	**10/10/25**	**03/18/26**		
177	**1880**	**Underground**	**50d**	**10/10/25**	**12/22/25**		
178	1881	Modeling	15d	10/10/25	10/30/25		
179	1882	Coordination	15d	10/31/25	11/20/25		
180	1883	Shop Drawing Creation	5d	11/21/25	11/28/25		
181	1884	Shop Drawing Review	10d	12/01/25	12/12/25		
182	1885	Shop Drawing Comment Updates	5d	12/15/25	12/19/25		
183	1886	Ready for Fab and Install		12/22/25	12/22/25		
184	**1890**	**L1**	**50d**	**11/21/25**	**02/04/26**		
185	1891	Modeling	15d	11/21/25	12/12/25		
186	1892	Coordination	15d	12/15/25	01/06/26		
187	1893	Shop Drawing Creation	5d	01/07/26	01/13/26		
188	1894	Shop Drawing Review	10d	01/14/26	01/27/26		
189	1895	Shop Drawing Comment Updates	5d	01/28/26	02/03/26		
190	1896	Ready for Fab and Install		02/04/26	02/04/26		
191	**1900**	**L2**	**50d**	**01/07/26**	**03/18/26**		
192	1910	Modeling	15d	01/07/26	01/27/26		

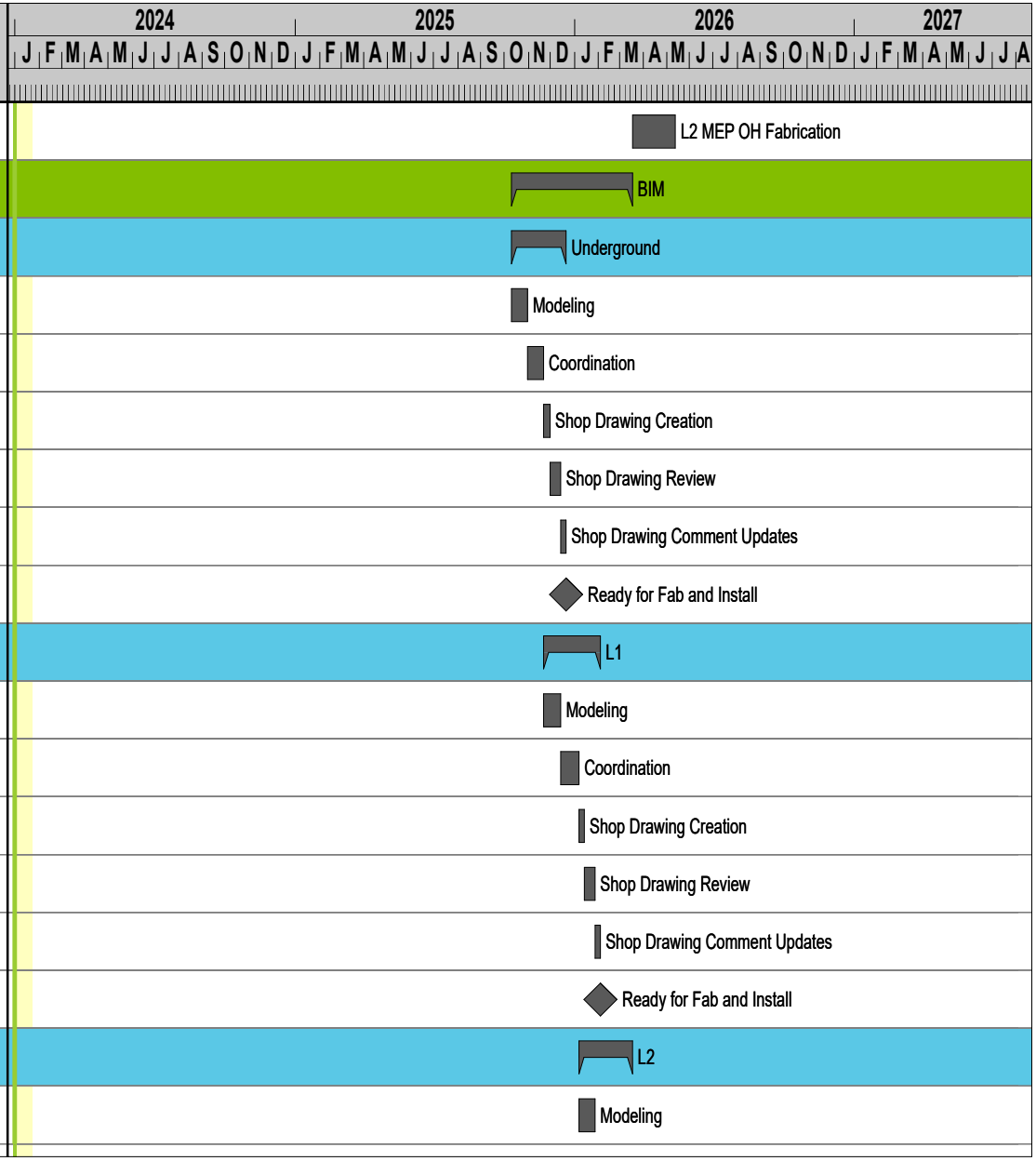

Revision Number:
Revision Comments:
Revision Date:

BCSC New Elementary 12 Schedule

Print Date: 6/18/2025
Data Date: 1/1/2024

Line	Task Number	Activity Name	Duration	Start	Finish	Actual start	Actual finish
193	1920	Coordination	15d	01/28/26	02/17/26		
194	1930	Shop Drawing Creation	5d	02/18/26	02/24/26		
195	1940	Shop Drawing Review	10d	02/25/26	03/10/26		
196	1950	Shop Drawing Comment Updates	5d	03/11/26	03/17/26		
197	1960	Ready for Fab and Install		03/18/26	03/18/26		
198	**0221**	**Construction**	**432d**	**09/26/25**	**06/07/27**		
199	**0230**	**Mobilization**	**5d**	**11/17/25**	**11/21/25**		
200	0231	Pepper Jobsite Trailer Setup	5d	11/17/25	11/21/25		
201	**0260**	**Sitework**	**301d**	**09/26/25**	**11/30/26**		
202	0820	Rough Grade and Set Building Pad	35d	09/26/25	11/13/25		
203	2500	Temporary Water In Place On Site	5d	10/24/25	10/30/25		
204	0810	Temp Stone for Pepper Trailer	1d	11/14/25	11/14/25		
205	2410	Geothermal Wells	50d	11/14/25	01/27/26		
206	0790	Temp Power	5d	11/17/25	11/21/25		
207	0811	Remaining Site Grading (Includes Temp Grading for Building Perimeter Crane	30d	11/17/25	12/30/25		
208	0262	Sanitary	15d	12/31/25	01/21/26		
209	0263	Site Domestic Water	15d	01/22/26	02/11/26		

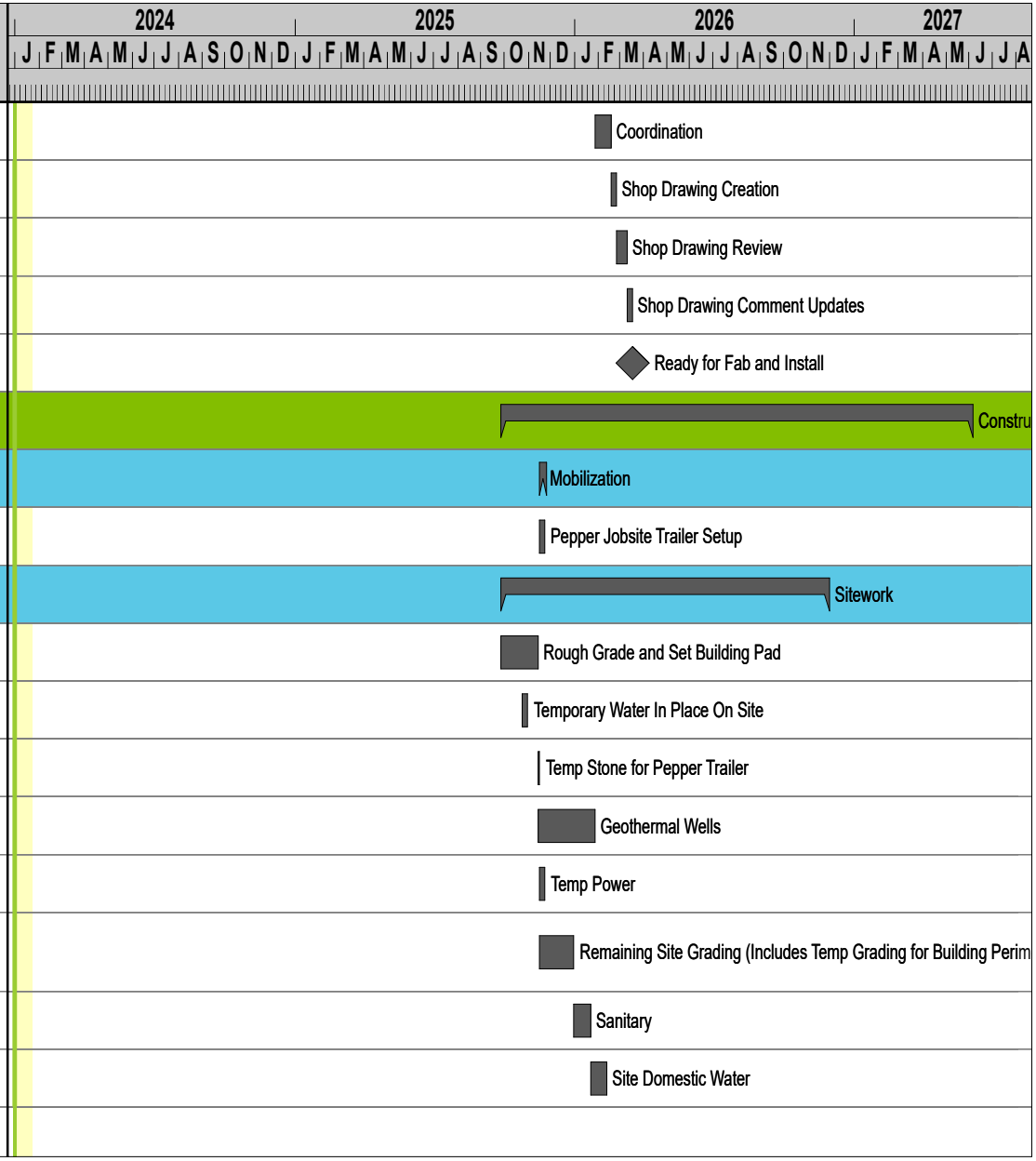

Revision Number:
Revision Comments:
Revision Date:

BCSC New Elementary 12 Schedule

Print Date: 6/18/2025
Data Date: 1/1/2024

Line	Task Number	Activity Name	Duration	Start	Finish	Actual start	Actual finish
210	0279	Geothermal Headers (latteral piping), Vaults and Piping to Building	40d	01/28/26	03/24/26		
211	0264	Site Fire Water	15d	02/12/26	03/04/26		
212	0265	Storm	25d	03/05/26	04/08/26		
213	0269	Electrical	10d	04/09/26	04/22/26		
214	0267	Telephone (Called on Legend, not shown?)	5d	04/23/26	04/29/26		
215	0268	Telecom (FO)	5d	04/30/26	05/06/26		
216	1040	Stone Remainder of Locations	10d	05/07/26	05/20/26		
217	0266	Gas Must Be Completed By		05/21/26	05/21/26		
218	0800	Heady Duty Binder	10d	05/21/26	06/04/26		
219	1200	Hardscapes	60d	06/05/26	08/27/26		
220	2400	Regrading at Building Perimeter (Bring to Rough Grade)	10d	09/21/26	10/02/26		
221	2140	Softscapes	40d	10/05/26	11/30/26		
222	**0270**	**Core and Shell**	**241d**	**11/14/25**	**10/23/26**		
223	**0271**	**Area 1**	**241d**	**11/14/25**	**10/23/26**		
224	0890	Footings and Foundations	20d	11/14/25	12/12/25		
225	0891	Elevator Pit	10d	12/01/25	12/12/25		
226	0930	Steel Erection and Decking	30d	12/22/25	02/03/26		
227	0920	Underslab MEP's	20d	02/04/26	03/03/26		

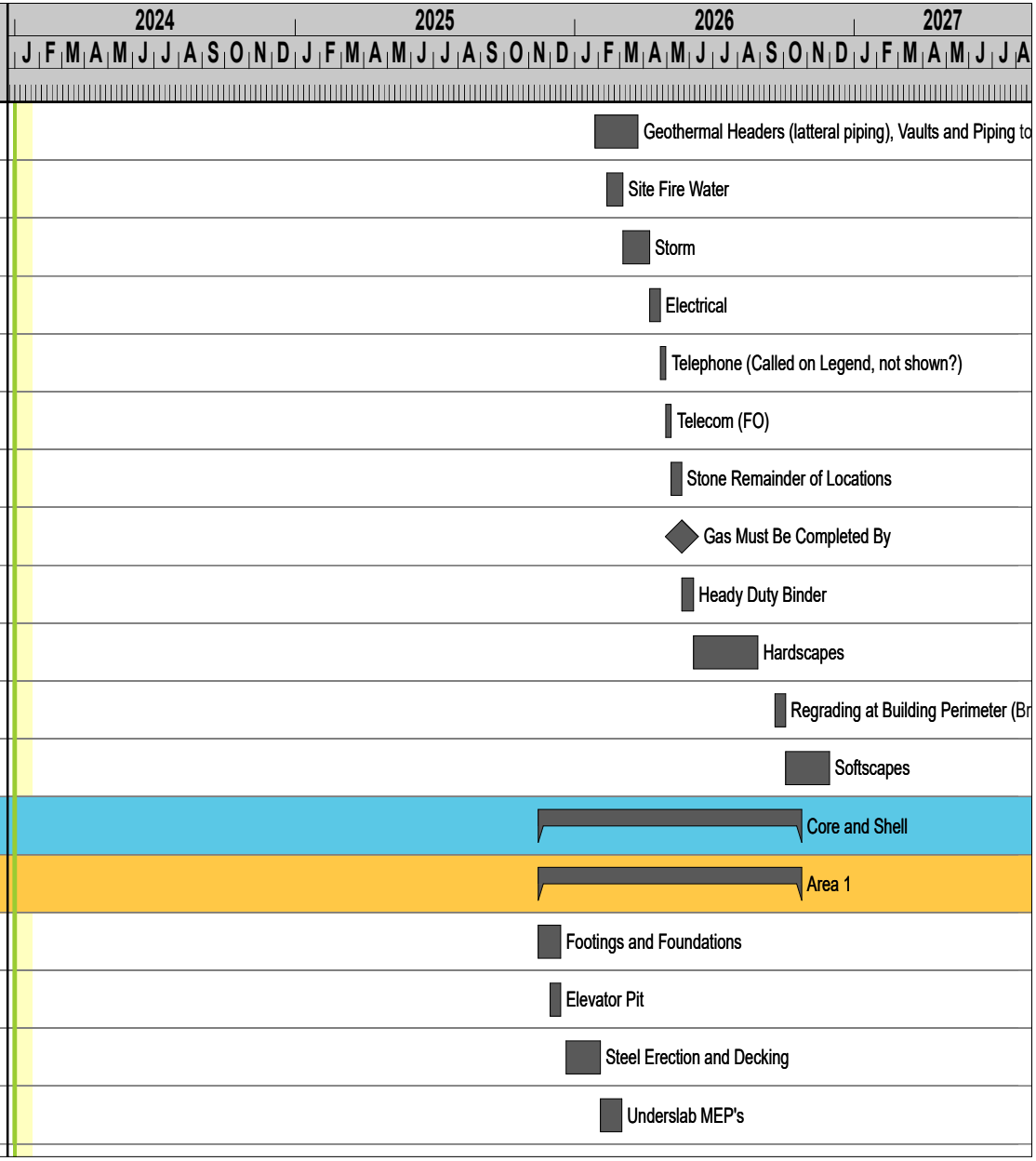

Revision Number:
Revision Comments:
Revision Date:

BCSC New Elementary 12 Schedule

Print Date: 6/18/2025
Data Date: 1/1/2024

Line	Task Number	Activity Name	Duration	Start	Finish	Actual start	Actual finish
228	0832	L2 SOD MEP Prep	5d	03/18/26	03/24/26		
229	0980	L2 SOD Pour Prep	5d	04/15/26	04/21/26		
230	0990	L2 SOD Pour	1d	04/22/26	04/22/26		
231	1980	Precast Embed Install	5d	04/23/26	04/29/26		
232	2010	Precast Install	10d	04/30/26	05/13/26		
233	0272	SOG Prep	15d	05/14/26	06/04/26		
234	0860	SOG Pour	1d	06/05/26	06/05/26		
235	0940	Stair (1-2 Line)	15d	04/15/26	05/05/26		
236	0950	Perimeter Roof Framing	15d	05/14/26	06/04/26		
237	2050	Curtainwall and Storefront	20d	05/14/26	06/11/26		
238	2100	Roofing	20d	06/05/26	07/02/26		
239	2110	Metal Panels	15d	07/03/26	07/23/26		
240	**0943**	**Elevator**	**211d**	**12/30/25**	**10/23/26**		
241	0892	Elevator Shaft Masonry Walls	20d	12/30/25	01/27/26		
242	0952	Elevator	40d	08/28/26	10/23/26		
243	**0921**	**Area 2**	**176d**	**12/15/25**	**08/20/26**		
244	0900	Footings and Foundations	15d	12/15/25	01/06/26		
245	0931	Steel Erection and Decking	30d	01/28/26	03/10/26		

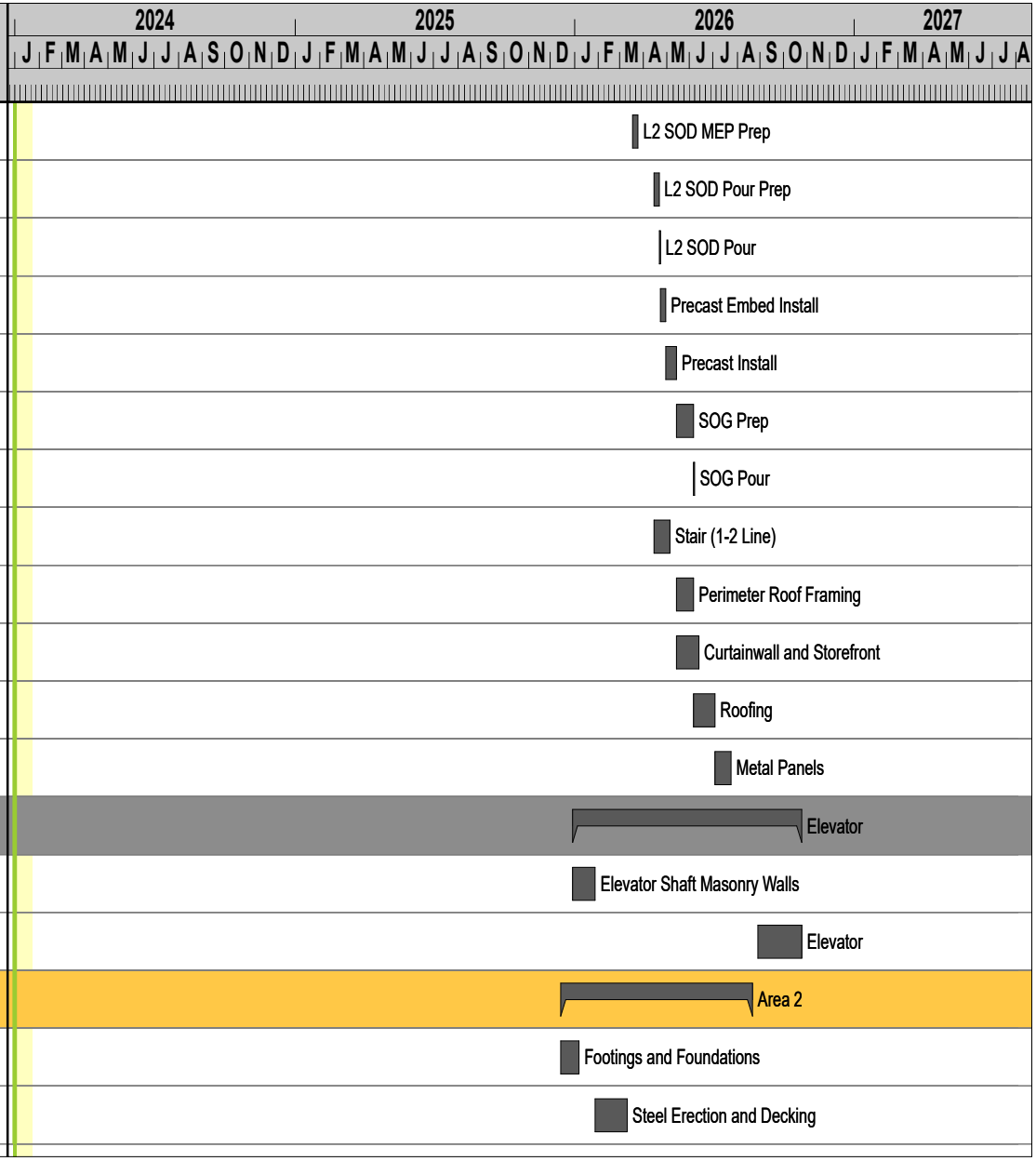

Revision Number:
Revision Comments:
Revision Date:

BCSC New Elementary 12 Schedule

Print Date: 6/18/2025
Data Date: 1/1/2024

Line	Task Number	Activity Name	Duration	Start	Finish	Actual start	Actual finish
246	0960	Underslab MEP's	15d	03/11/26	03/31/26		
247	0991	L2 SOD MEP Prep	10d	03/11/26	03/24/26		
248	1000	L2 SOD Pour Prep	10d	04/23/26	05/06/26		
249	1010	L2 SOD Pour	1d	05/07/26	05/07/26		
250	1990	Precast Embed Install	5d	05/08/26	05/14/26		
251	2020	Precast Install	15d	05/15/26	06/05/26		
252	0850	SOG Prep	10d	06/08/26	06/19/26		
253	0870	SOG Pour	1d	06/22/26	06/22/26		
254	0941	Stair (2-B Line)	15d	05/06/26	05/27/26		
255	0951	Perimeter Roof Framing	15d	06/08/26	06/26/26		
256	2060	Curtainwall and Storefront	20d	06/12/26	07/09/26		
257	2120	Roofing	20d	07/03/26	07/30/26		
258	2130	Metal Panels	15d	07/31/26	08/20/26		
259	**0961**	**Area 3**	**181d**	**01/07/26**	**09/18/26**		
260	0910	Footings and Foundations	15d	01/07/26	01/27/26		
261	0932	Steel Erection and Decking	30d	03/04/26	04/14/26		
262	0970	Underslab MEP's	15d	04/15/26	05/05/26		
263	1011	L2 SOD MEP Prep	10d	04/15/26	04/28/26		

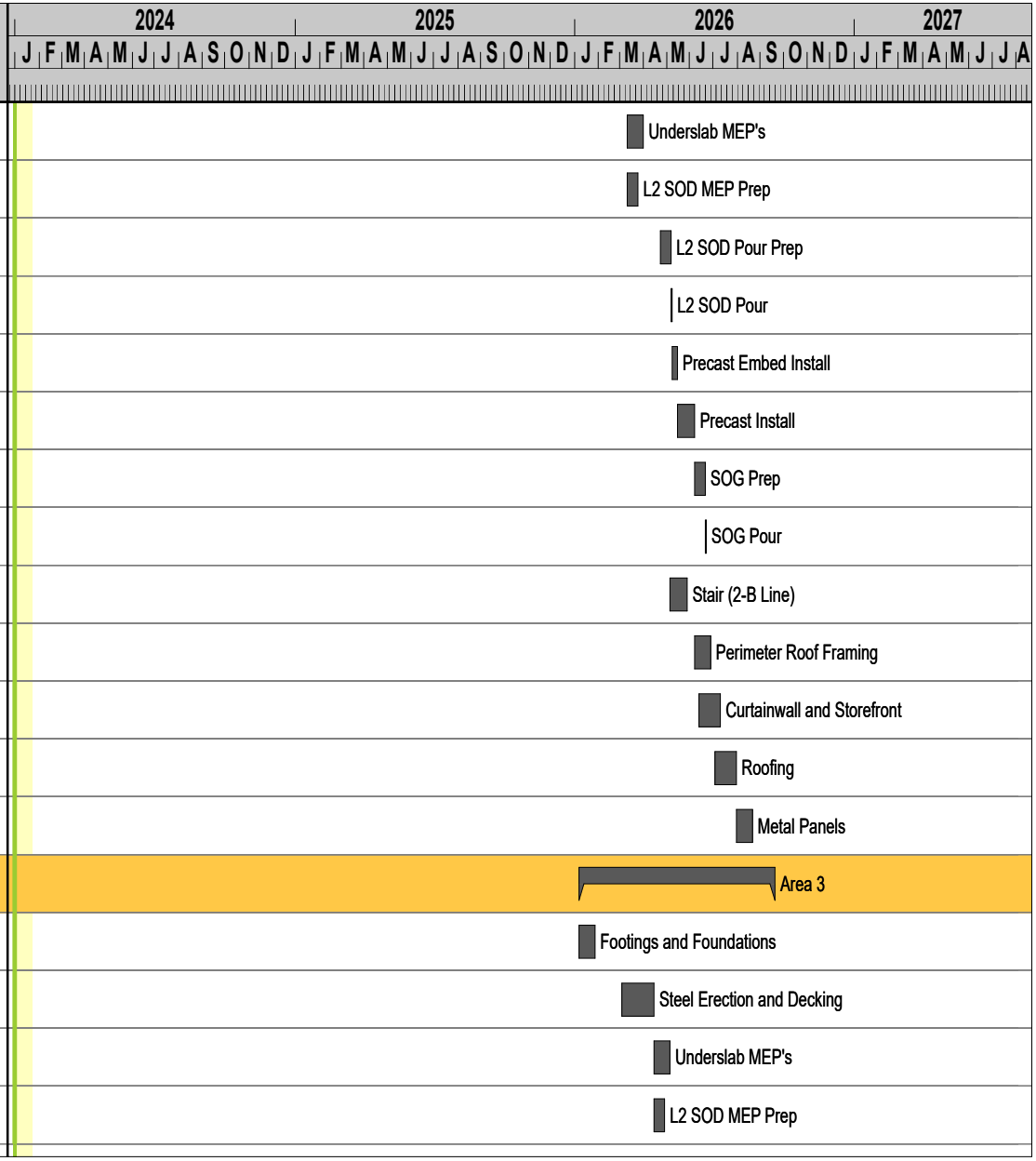

Revision Number:
Revision Comments:
Revision Date:

BCSC New Elementary 12 Schedule

Print Date: 6/18/2025
Data Date: 1/1/2024

Line	Task Number	Activity Name	Duration	Start	Finish	Actual start	Actual finish
264	1020	L2 SOD Pour Prep	10d	05/08/26	05/21/26		
265	1030	L2 SOD Pour	1d	05/22/26	05/22/26		
266	2000	Precast Embed Install	5d	05/26/26	06/01/26		
267	2030	Precast Install	15d	06/08/26	06/26/26		
268	0840	SOG Prep	10d	06/29/26	07/10/26		
269	0830	SOG Pour	1d	07/13/26	07/13/26		
270	0942	Stairs (3-G Line)	15d	05/28/26	06/17/26		
271	1970	Stair (5-F Line)	15d	06/18/26	07/08/26		
272	1210	Roof Access Stair (Is this in Area 1?)	10d	07/09/26	07/22/26		
273	2040	Perimeter Roof Framing	15d	06/29/26	07/17/26		
274	2070	Curtainwall and Storefront	20d	07/10/26	08/06/26		
275	2080	Roofing	20d	07/31/26	08/27/26		
276	2090	Metal Panels	15d	08/28/26	09/18/26		
277	**0290**	**Interior**	**257d**	**05/06/26**	**05/06/27**		
278	0291	Stair Shaft Construction	45d	05/06/26	07/08/26		
279	2210	Space Conditioned		10/27/26	10/27/26		
280	2200	Gym Flooring Aclimation	5d	10/27/26	11/02/26		
281	2220	Gym Lighting	5d	10/27/26	11/02/26		

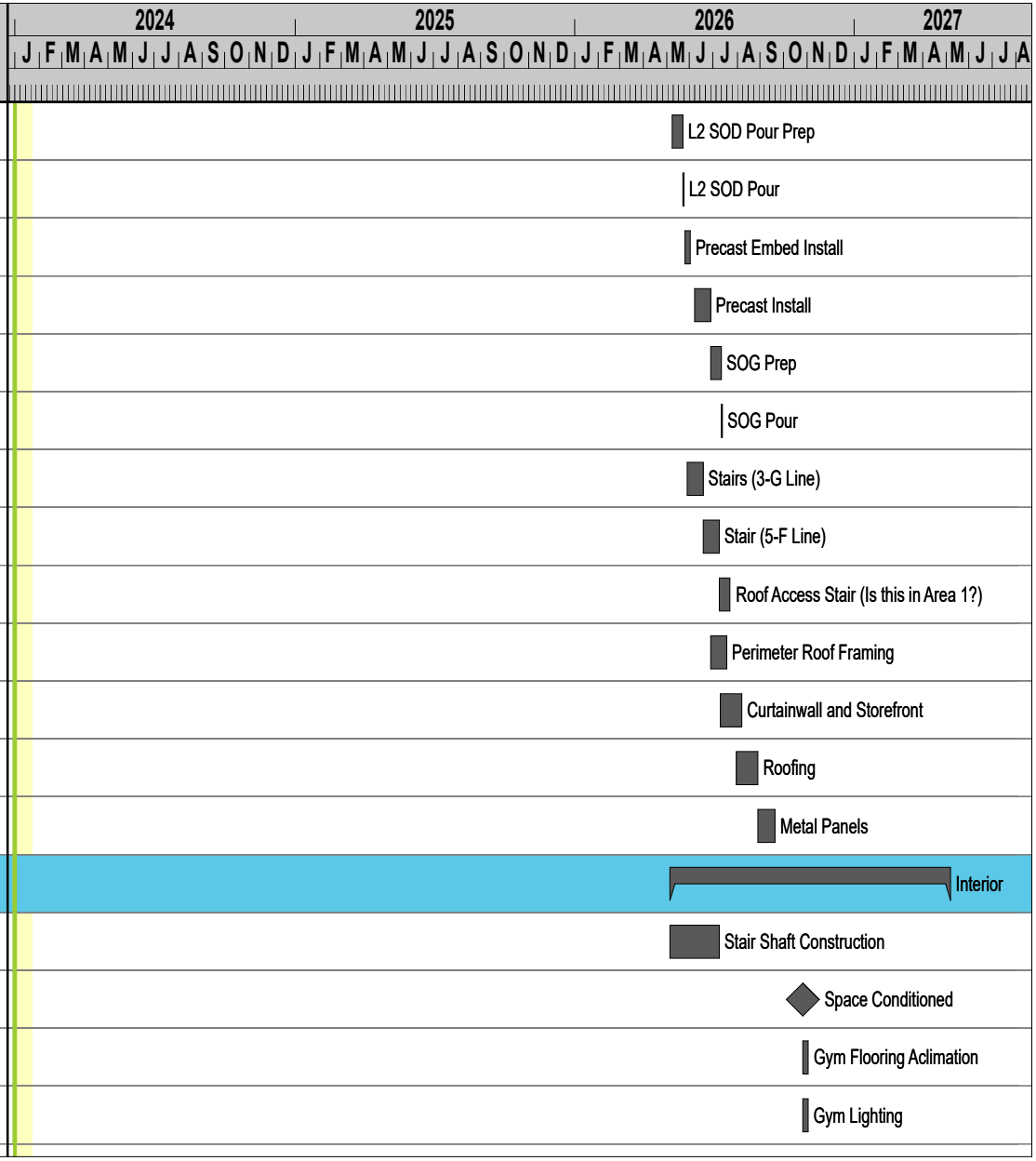

Revision Number:
Revision Comments:
Revision Date:

BCSC New Elementary 12 Schedule

Print Date: 6/18/2025
Data Date: 1/1/2024

Line	Task Number	Activity Name	Duration	Start	Finish	Actual start	Actual finish
282	2230	Gym Paint and Wallcoverings	5d	11/03/26	11/09/26		
283	2190	Gym Flooring Install	20d	11/10/26	12/08/26		
284	2180	Cafeteria Equipment Install	20d	12/23/26	01/21/27		
285	**0292**	**L1**	**209d**	**07/14/26**	**05/06/27**		
286	0303	Set Door Frames	15d	07/14/26	08/03/26		
287	0295	Overhead MEP's	40d	07/27/26	09/21/26		
288	0293	Masonry and Framing Complete (Walls, Bulkheads,	50d	08/10/26	10/19/26		
289	0294	In Wall MEP's	25d	09/22/26	10/26/26		
290	2170	Perimeter Wall Insulation	15d	10/06/26	10/26/26		
291	0296	Drywall (Hang and Finish)	30d	10/27/26	12/08/26		
292	0306	Permanent MEP's Live		10/27/26	10/27/26		
293	0297	Paint and Wallcoverings	20d	11/24/26	12/22/26		
294	2150	Interior Glazing	15d	12/09/26	12/30/26		
295	0298	Ceiling	20d	12/09/26	01/07/27		
296	0299	Lighting	20d	12/23/26	01/21/27		
297	0302	Finishes	20d	01/22/27	02/18/27		
298	0300	Flooring	30d	01/22/27	03/04/27		
299	2160	Accessories (Toilet Partitions, Lockers, etc)	40d	01/22/27	03/18/27		

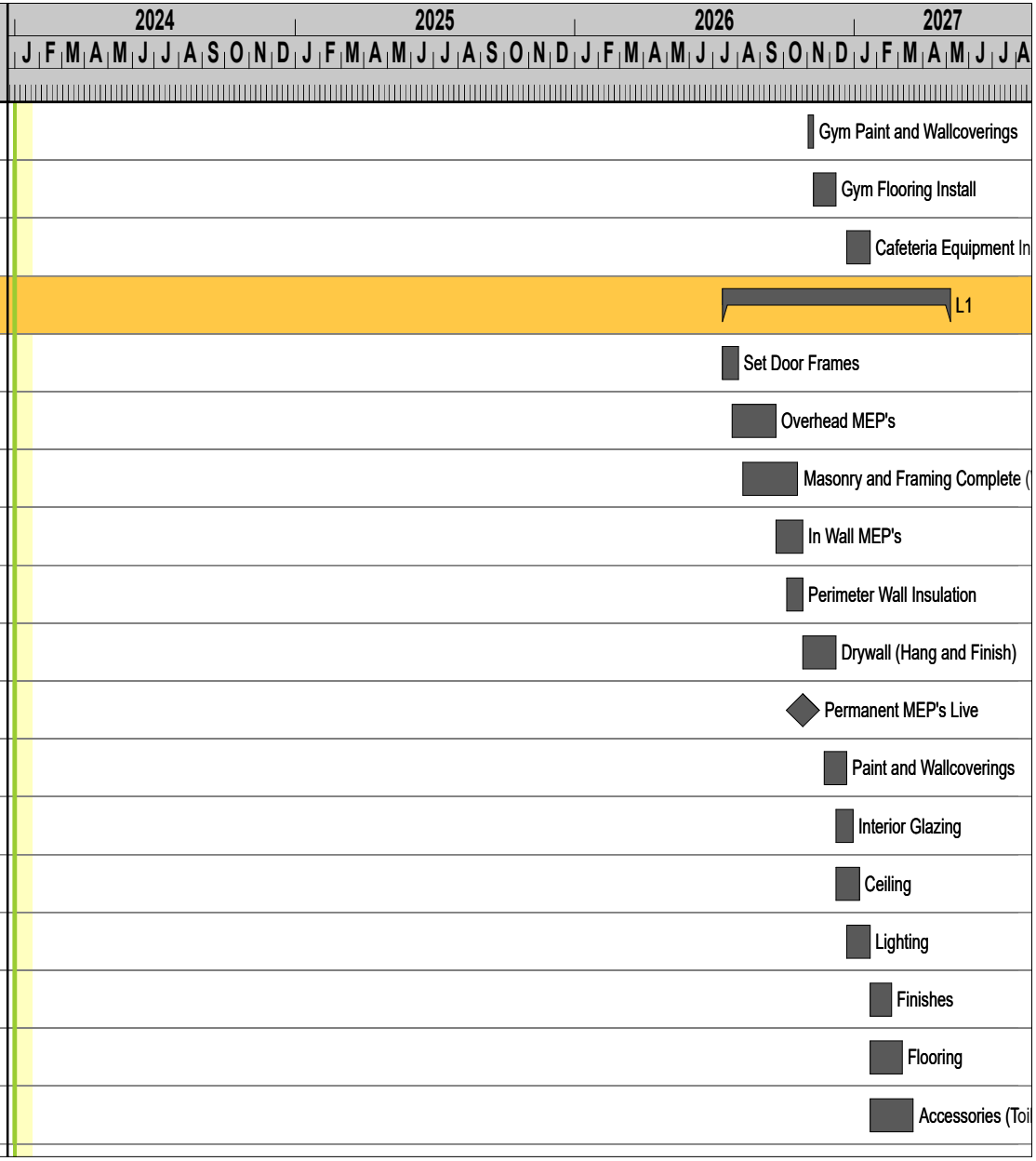

Revision Number:
Revision Comments:
Revision Date:

BCSC New Elementary 12 Schedule

Print Date: 6/18/2025
Data Date: 1/1/2024

Line	Task Number	Activity Name	Duration	Start	Finish	Actual start	Actual finish
300	0301	Millwork	25d	03/05/27	04/08/27		
301	0304	Doors and Hardware	30d	03/05/27	04/15/27		
302	0305	Operable Partitions	25d	03/05/27	04/08/27		
303	0315	Pepper Punch	15d	04/16/27	05/06/27		
304	**0307**	**L2**	**135d**	**06/29/26**	**01/07/27**		
305	0380	Set Door Frames	10d	06/29/26	07/10/26		
306	0310	Masonry and Framing Complete (Walls, Bulkheads,	30d	06/29/26	08/07/26		
307	0312	Overhead MEP's	20d	06/29/26	07/24/26		
308	0311	In Wall MEP's	20d	07/27/26	08/21/26		
309	0308	Perimeter Wall Insulation	15d	08/03/26	08/21/26		
310	0320	Drywall (Hang and Finish)	25d	08/24/26	09/28/26		
311	0382	Permanent MEP's Live		10/14/26	10/14/26		
312	0321	Paint and Wallcoverings	20d	09/15/26	10/12/26		
313	0371	Interior Glazing	25d	09/29/26	11/02/26		
314	0330	Ceiling	15d	09/29/26	10/19/26		
315	0340	Lighting	15d	10/13/26	11/02/26		
316	0370	Finishes	10d	11/03/26	11/16/26		
317	0350	Flooring	15d	11/03/26	11/23/26		

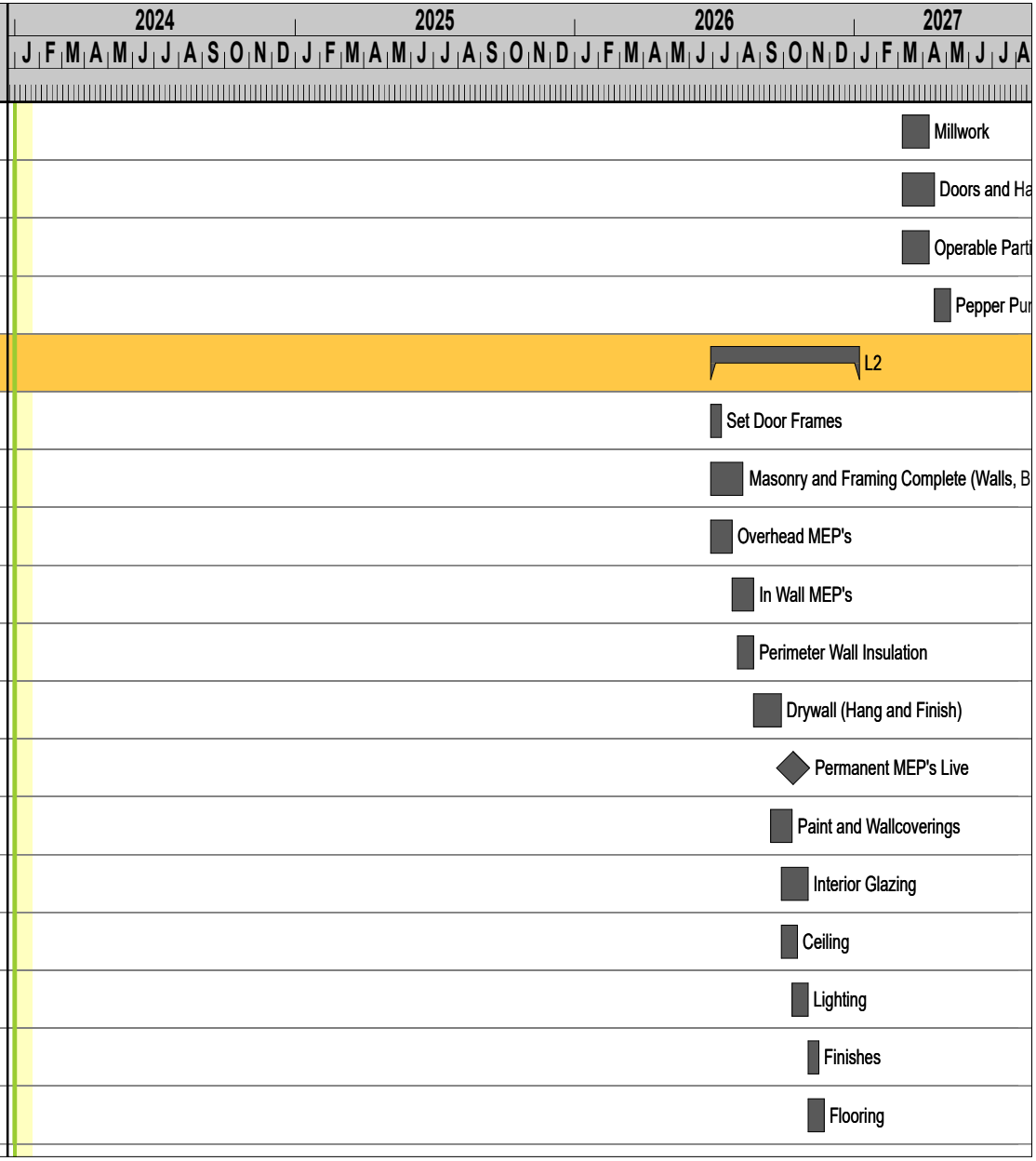

Revision Number:
Revision Comments:
Revision Date:

BCSC New Elementary 12 Schedule

Print Date: 6/18/2025
Data Date: 1/1/2024

Line	Task Number	Activity Name	Duration	Start	Finish	Actual start	Actual finish
318	0361	Accessories (Toilet partitions, lockers, etc)	15d	11/03/26	11/23/26		
319	0360	Millwork	15d	11/24/26	12/15/26		
320	0381	Doors and Hardware	20d	11/24/26	12/22/26		
321	0391	Operable Partitions	20d	11/24/26	12/22/26		
322	0392	Pepper Punch	10d	12/23/26	01/07/27		
323	**0410**	**Close Out**	**156d**	**10/26/26**	**06/07/27**		
324	0470	Elevator Inspection	2d	10/26/26	10/27/26		
325	0420	Commissioning	20d	01/22/27	02/18/27		
326	0430	Owner Training	5d	02/19/27	02/25/27		
327	0440	MEP Final Inspections	5d	02/19/27	02/25/27		
328	0431	Systems Balance (TAB)	5d	04/16/27	04/22/27		
329	0450	Building Final Inspection	1d	04/16/27	04/16/27		
330	0460	Fire Department Final Inspection	2d	04/16/27	04/19/27		
331	0471	Substantial Completion		04/16/27	04/16/27		
332	0480	A/E Final Punch list	10d	05/07/27	05/20/27		
333	0490	FFE	10d	05/21/27	06/04/27		
334	0500	Final Completion		06/07/27	06/07/27		

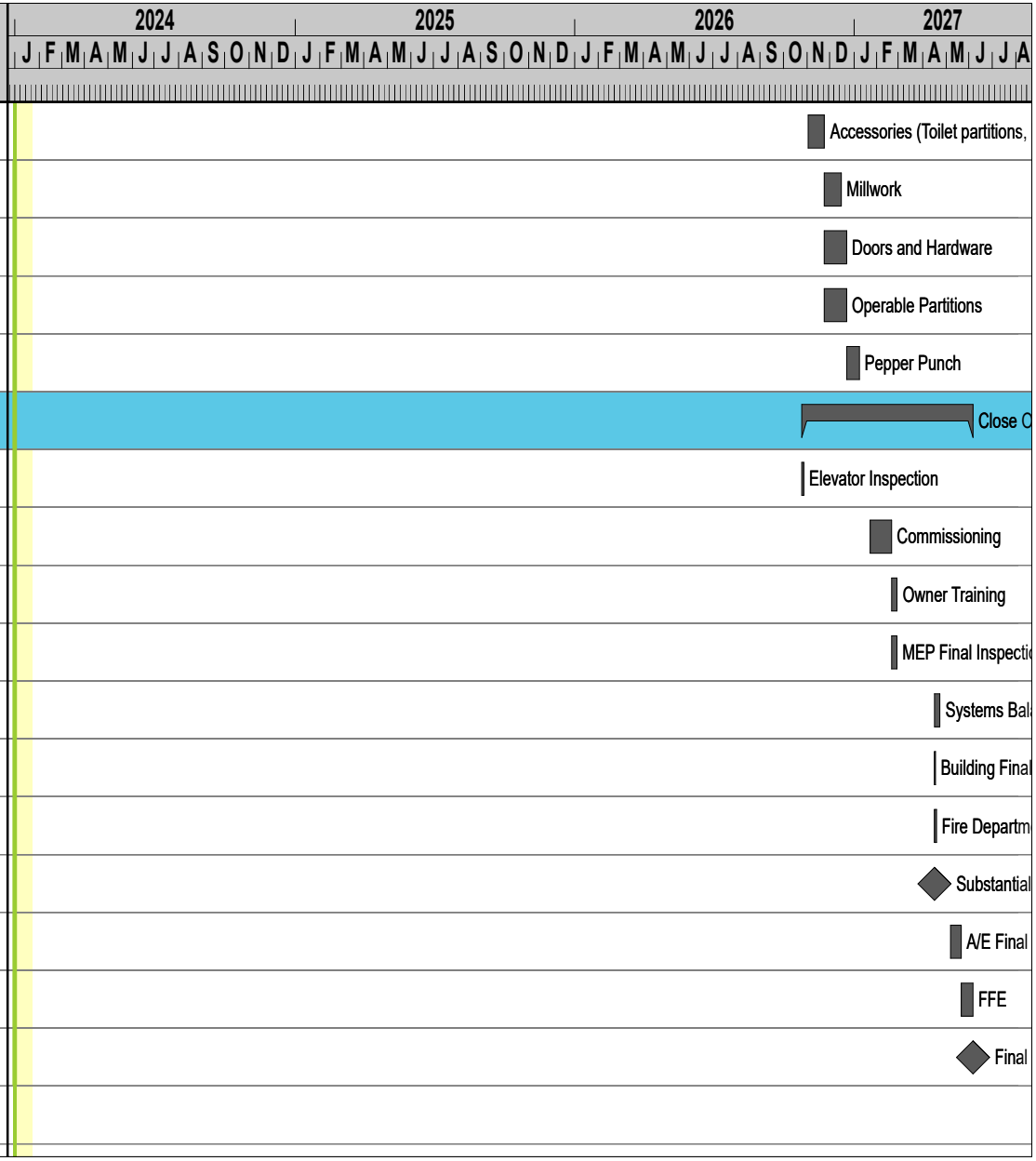

Revision Number:
Revision Comments:
Revision Date:

LOGISTICS/PHASING PLAN

Pepper Construction
Tomorrow Transformed

BCSC New Elementary #12

Site Logistics

Updated: 06/12/2025

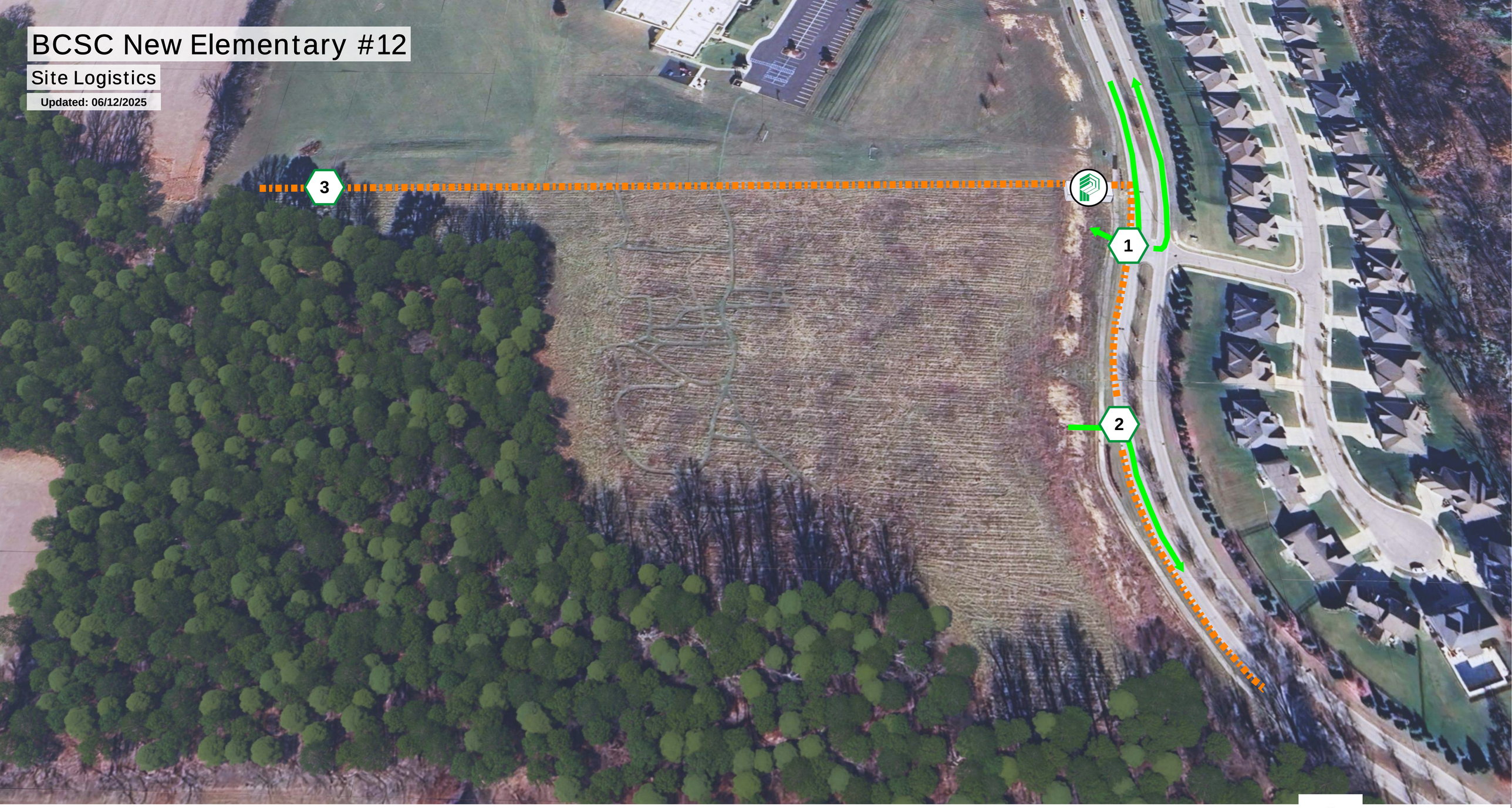

PEPPER JOBSITE OFFICE

GATE

CONSTRUCTION FENCE

CONSTRUCTION TRAFFIC

N

Pepper Construction
Tomorrow Transformed

BCSC New Elementary #12

Site Logistics

Updated: 06/12/2025

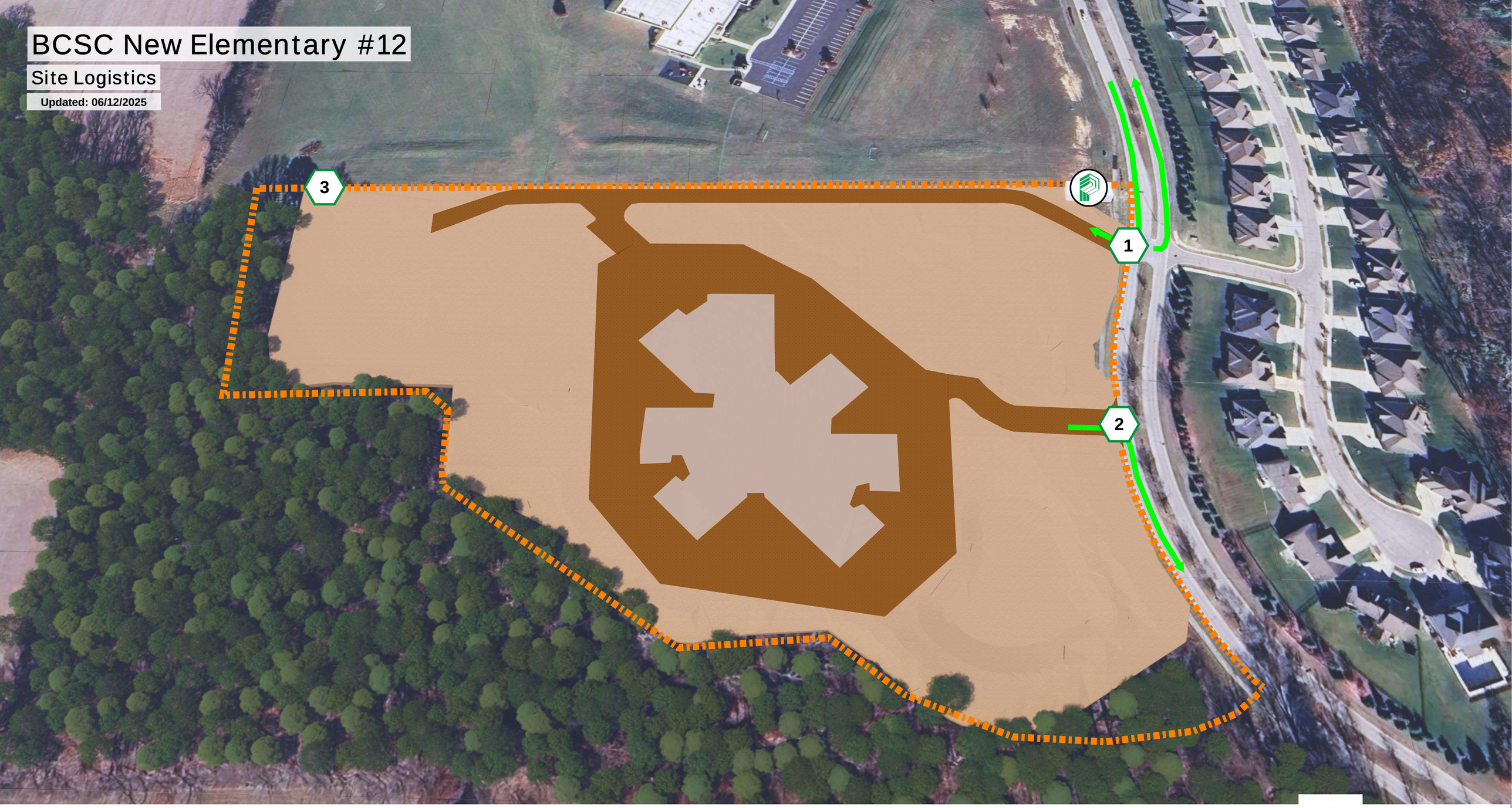

PEPPER JOBSITE OFFICE

GATE

CONSTRUCTION FENCE

CONSTRUCTION TRAFFIC

STONE ROAD

N

Pepper Construction
Tomorrow Transformed

BCSC New Elementary #12

Site Logistics

Updated: 06/12/2025

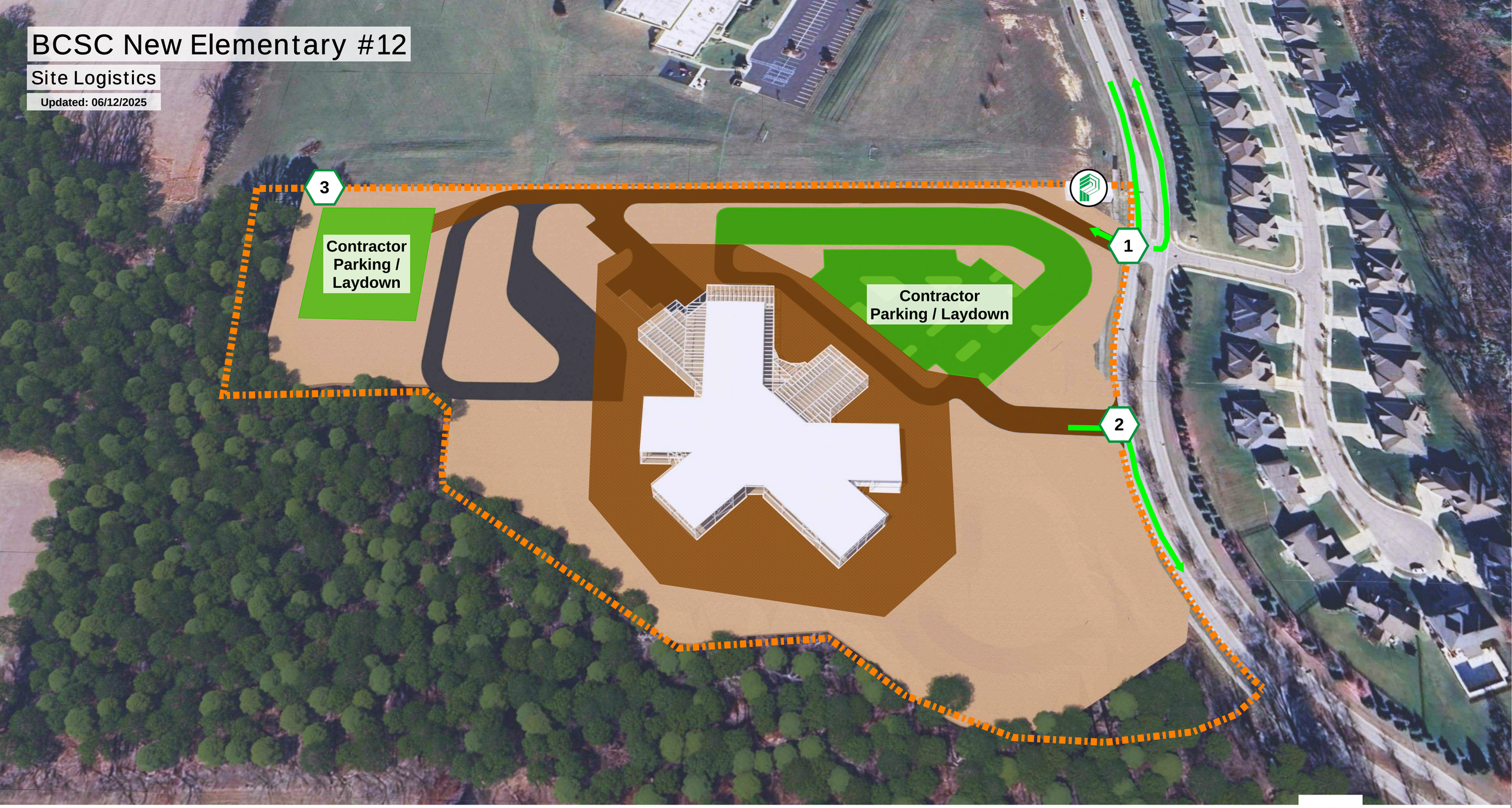

PEPPER JOBSITE OFFICE

GATE

CONSTRUCTION FENCE

CONSTRUCTION TRAFFIC

STONE ROAD

N

Pepper Construction
Tomorrow Transformed

BCSC New Elementary #12

Site Logistics

Updated: 06/12/2025

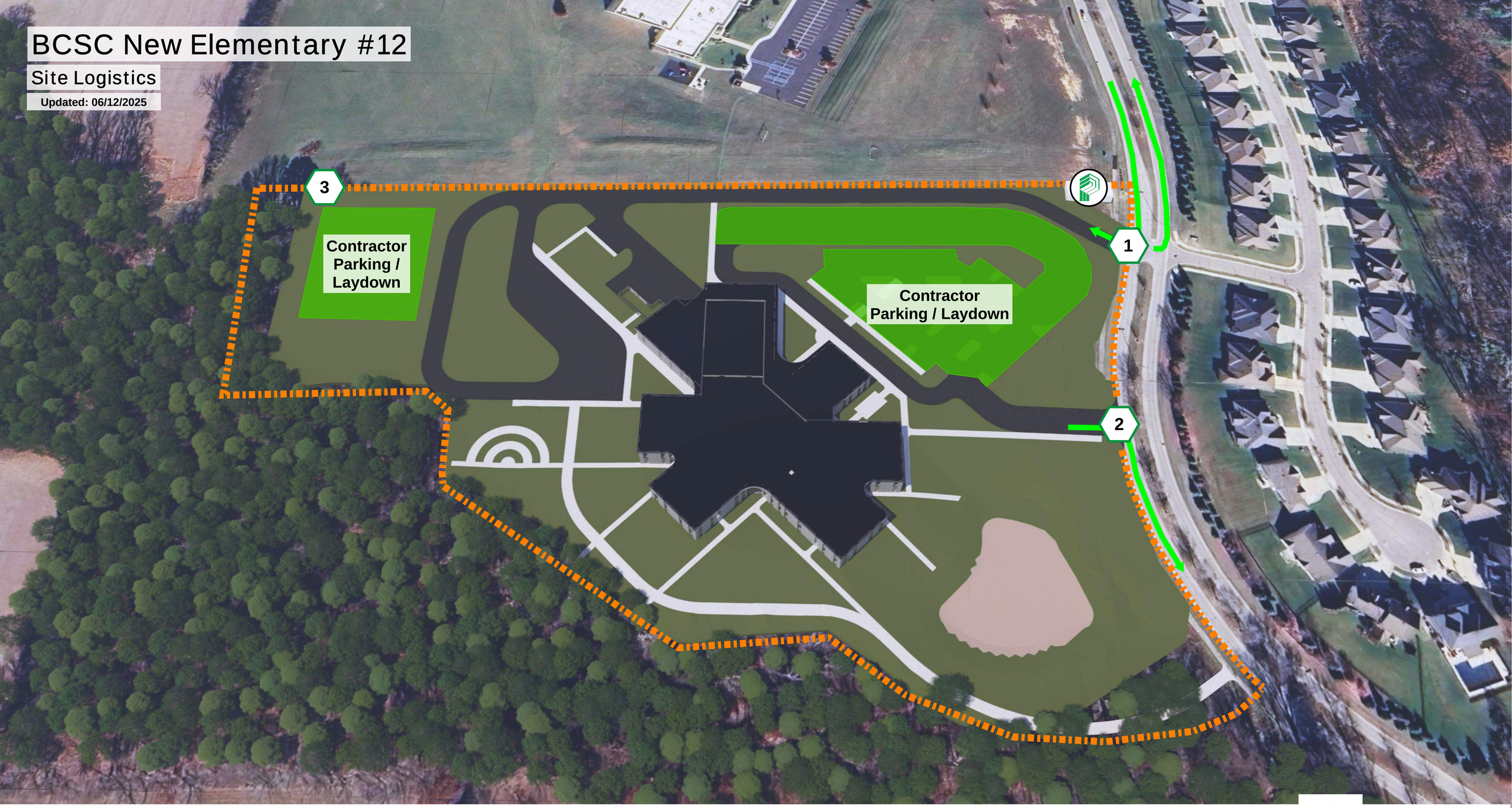

PEPPER JOBSITE OFFICE

GATE

CONSTRUCTION FENCE

CONSTRUCTION TRAFFIC

N

Pepper Construction
Tomorrow Transformed

SAMPLE SUBCONTRACT AGREEMENT

Pepper Construction
Tomorrow Transformed

SUBCONTRACT AGREEMENT

Date:
No.:

1850 West 15th Street, Indianapolis, IN 46202
317 681-1000 Fax: 317 684-9694

To:

Attn:
Phone: Fax:
Email:

Perform Work at: ("Project")
or Ship to:

Attn: Phone: Fax:

Contract Dollar Value: $ Subject to retainage of:____%	Job No. - Vendor # - SubJob - Phase -	MINIMUM INSURANCE: See Article 10 and **Exhibit C**

Furnish all labor, material, equipment, supervision and insurance as required to provide and fully complete all _____ work ("Work") for the above-referenced Project in strict accordance with the Contract Documents as further described herein. This Work is to be performed for the _____ price, including all applicable taxes, of _____ and ____/100 Dollars ($_____) ("Subcontract Price").

This Subcontract Agreement must be signed and received in addition to submitting an acceptable Certificate of Insurance prior to working on site. This information must be submitted before any payouts or accounting functions may proceed.

The Owner for this Project is _____ ("Owner") and the Architect for this Project is _____ ("Architect").

A COPY OF SUBCONTRACTOR'S UP-TO-DATE INSURANCE CERTIFICATE MUST BE ON FILE WITH PEPPER'S SUPERINTENDENT AT THE JOBSITE PRIOR TO BEGINNING WORK ON THIS PROJECT. PLEASE SEE ARTICLE 10 AND **EXHIBIT C** FOR FURTHER INSTRUCTIONS.

SUBCONTRACTOR SHALL SUBMIT INVOICES BY THE 15TH OF EACH MONTH. SEE ARTICLE 47, BILLING PROCEDURES.

Contract Documents applicable to this Subcontract Agreement (Articles 1 through 47 inclusive) are as follows:

- Exhibit A – Contract Document Listing
- Exhibit B – Scope of Work
- Exhibit C – Insurance Requirements (Non-CCIP or CCIP, as applicable)
- Exhibit D – 04/01//22 Trade Partner Safety Handbook
- Exhibit E – Project Schedule as prepared by Pepper Construction Company of Indiana, LLC

Any additional Exhibits are identified on the following page 2.

Subcontractor agrees that the subject matter of this Subcontract is confidential in nature and that Subcontractor will not provide any third-party with any information contained herein without the prior written consent of PEPPER CONSTRUCTION COMPANY OF INDIANA, LLC.

TERMS AND CONDITIONS ACCEPTED:

PEPPER CONSTRUCTION COMPANY OF INDIANA, LLC

By: _____ By: _____
Printed: _____ Printed: _____
Title: _____ Title: _____
Dated: _____ Dated: _____

Sample

Additional Exhibits:

Sample

SUBCONTRACTOR OBLIGATIONS

By executing and returning the attached acceptance copy of this Subcontract, or if the acceptance copy is not executed and returned, by partial or complete performance under this Subcontract Agreement ("Subcontract" or "Agreement"), you, as Subcontractor, agree with Pepper Construction Company of Indiana, LLC ("PEPPER"), as follows:

1. Contract Documents

This Subcontract Agreement as defined on page 1 includes, but is not limited to, the Agreement between PEPPER and Owner ("Owner Agreement"), all addenda, modifications, revisions, Drawings, Specifications, details, all general, technical and supplementary conditions, and any Project Labor Agreement for the Project. A listing of the Contract Documents is found at **Exhibit A**, and Subcontractor's Scope of Work is found at **Exhibit B**. For purposes of this Subcontract Agreement, the Subcontractor is obligated to PEPPER as PEPPER is obligated to the Owner under the Contract Documents. The Owner is a third-party beneficiary to this Subcontract. Subcontractor also agrees to similarly bind its sub-subcontractors. Subcontractor shall have the same rights against PEPPER that PEPPER has against the Owner. In case of conflict between the Contract Documents and this Subcontract Agreement, the more stringent term or the highest quality materials shall be required.

The exchange of copies of this Subcontract Agreement and of signature pages by facsimile ("fax") transmission (whether directly from one fax device to another by means of an internet connection or whether conveyed electronically via the internet), by email in pdf format, or by any other electronic means intended to preserve the original graphic and pictorial appearance of a document, or by combination of such means, shall constitute effective execution and delivery of this Subcontract Agreement as to the Parties and may be used in lieu of the original Subcontract Agreement for all purposes. To that end, signatures of the Parties transmitted by fax, electronic format, or via DocuSign shall be deemed to be their original signatures for all purposes.

2. Incomplete Details

The work to be performed by the Subcontractor ("Work") includes that work specifically set forth in this Subcontract Agreement, as well as any and all other work reasonably inferable from the Contract Documents to include work which is necessary to have a properly working and totally acceptable Scope of Work for this Subcontract Agreement. The Subcontractor shall take all field measurements necessary to perform its work. PEPPER makes no warranty, either expressed or implied, as to the sufficiency of the Construction Documents furnished by the Owner. The Subcontractor shall furnish all required samples and shop drawings in order to ensure that the Subcontractor's Scope of Work is complete in every detail and free from any gaps, duplications, or omissions.

3. Examination of Site

Subcontractor warrants that it has visited and examined the Project site and further that it shall make no claim for extra work on account of existing exposed site conditions.

4. Permits and Licenses

In performing the Work, Subcontractor shall comply with all laws and ordinances, give authorities timely and proper notices, and secure and pay for all necessary permits, licenses, inspections, tests and bonds required for the Work performed under the Subcontract. The general building permit will be obtained and paid for by others.

5. Payment and Performance Bonds

Subcontractor warrants to PEPPER that it currently has, and will maintain for the life of the Project, sufficient bonding capacity from a surety company acceptable to PEPPER. If included as part of the Bid Instructions/Construction Documents, or upon reasonable written notice prior to the start of the Work, or thereafter if required by amendment to this Subcontract Agreement, Subcontractor shall furnish to PEPPER a One Hundred Percent (100%) payment and performance bond with an A.M. Best rating of A/X or better. The Subcontractor's bonds shall be maintained throughout the duration of the Project, including the warranty period set forth in the Contract Documents. The premium costs for such bonds are included in the Subcontract Price or within a Change Order.

6. Taxes

Subcontractor shall pay all sales taxes, use taxes, occupation taxes, excise taxes, FICA taxes, unemployment taxes, and any other tax or levy applicable to this Subcontract Agreement.

7. Liens/Bonds

In the event that PEPPER receives a notice or claim of lien from a sub-subcontractor or material supplier of Subcontractor, PEPPER shall have the right to require the Subcontractor to bond over the lien in an amount of One Hundred Fifty Percent (150%) of the claim. Should PEPPER determine, in its sole discretion, that Subcontractor is not justified in refusing to pay the claim, after three (3) business days' written notice to Subcontractor, PEPPER shall have the right to pay a sum sufficient to discharge such lien or obligation and charge the same against any amount owed Subcontractor. PEPPER shall also have the right to require the Subcontractor to furnish and pay for a lien release bond in an amount not less than One Hundred Fifty Percent (150%) of (a) the sum of any final lien waivers the Subcontractor fails to provide or (b) the amount of any lien claims. Provided payment is made for Work properly performed, Subcontractor agrees to defend, hold harmless and indemnify PEPPER and Owner against any loss, damages, judgments and expenses (including reasonable attorneys' fees) which PEPPER or Owner may sustain in connection with any lien or claim.

8. Payments

Sample

PEPPER does not financially guarantee the Owner's ability to fund the Project cost. In the event of Owner's insolvency or willful refusal to pay PEPPER, and notwithstanding anything to the contrary in the Owner Agreement, it is an express condition of this Subcontract Agreement that PEPPER's obligation to pay Subcontractor is contingent upon receipt of payment from Owner for Subcontractor's Work. Owner's withholding of a PEPPER payment, due to an alleged failure by PEPPER to perform any of its obligations unrelated to this Subcontract Agreement, will not excuse payment to Subcontractor according to the terms of this Subcontract Agreement. To the extent permitted by law, retainage shall be held by PEPPER as provided in the Owner Agreement, or as deemed necessary by PEPPER until any failure of performance is corrected and Subcontractor is in compliance with this Subcontract Agreement.

In the event of Owner's nonpayment, nothing contained in this Agreement shall be construed as a waiver or impairment of Subcontractor's mechanic lien rights.

Unless expressly made a part of the Scope of Work for this Agreement, the cost of construction work completed does not include materials or equipment stored off the site.

All billings to the General Contractor for materials delivered or Work completed will be done per the PEPPER billing procedures ("Accounting Package"), which are further described within Article 47. All amounts to be billed must be approved before billings are submitted. Payments received from Owner shall be held for Subcontractor's account and promptly disbursed according to the terms of this Subcontract Agreement.

In accordance with the terms of the Agreement between the Owner and PEPPER, PEPPER or the Owner shall have the right to audit Subcontractor's performance and billing of the Work.

9. Indemnification

To the fullest extent permitted by law, the Subcontractor shall defend, indemnify and hold harmless PEPPER, the Owner, Architect and others required in the Contract Documents and their agents, invitees and other employees (collectively, the "Indemnitees"), from and against first- and third-party claims, damages (direct and consequential), losses and expenses, including but not limited to insurance deductibles and attorneys' fees ("Claims"), arising out of or resulting from 1) Subcontractor's performance of or failure to perform its obligations under this Subcontract Agreement; 2) defective workmanship or materials; 3) bodily injury, sickness, disease or death, or to injury to or destruction of tangible property, including loss of use resulting therefrom, caused in whole or in part by negligent acts or omissions of the Subcontractor, or anyone directly or indirectly employed by them or anyone for whose acts they may be liable, provided, however, that Subcontractor shall not be required to defend, indemnify, and hold harmless the Indemnitees if the injury, sickness, disease or death, or injury to or destruction of tangible property is caused by the sole negligence or willful misconduct of the Indemnitees; 4) fines, penalties and other charges levied against PEPPER by any governmental entity or authority having jurisdiction as the result of Subcontractor's acts or omissions; 5) mechanics lien and bond claims asserted by Subcontractor or its suppliers or lower tier subcontractors or suppliers; 6) patent, trademark, copyright or trade dress infringement Claims arising out of Subcontractor's Work; and 7) claims for wages or benefits by employees of Subcontractor or Sub-subcontractors. This indemnification shall not be limited in any way by any limitations on the amount or type of damages, compensation or benefits payable by or for the Subcontractor under Workers' Compensation Acts, disability benefit acts or other employee benefit acts and shall survive Completion and final payment of this Subcontract.

Subcontractor further agrees to obtain, maintain, and pay for such insurance as will insure the provisions of this Article 9.

10. Insurance

Subcontractor shall maintain, at its own expense, during the progress of the Work and throughout the warranty period, all insurance coverages as required in the attached Insurance **Exhibit C - Non-CCIP** [or in the event of a CCIP, **Exhibit C – CCIP**]. PEPPER reserves the right to implement a Contractor Controlled Insurance Program ("CCIP") in PEPPER's sole discretion, for the provision of Commercial General Liability and Umbrella (follow form) Liability coverages for the Project. In the event a CCIP is implemented, Subcontractor shall credit against the Subcontract Price the actual cost of insurance not required from the Subcontractor for the Project and shall comply with and maintain all other insurance as set forth in **Exhibit C – CCIP.**

11. Safety Regulations

A PEPPER representative is required to be on site any time Work is being performed by Subcontractor. The Subcontractor, its agents, employees, materialmen and sub-subcontractors will comply with all laws and ordinances and will perform all work on the Project in a safe and responsible manner. In particular, Subcontractor shall, at its own expense, conform to the safety policies and regulations established by PEPPER as listed within this Subcontract Agreement and the "Trade Partner Safety Handbook", **Exhibit D**, and shall comply with all specific safety requirements promulgated by any government authority, including, without limitation, the requirements of the Occupational Safety and Health Act of 1970 and the Construction Safety Act of 1969 and all standards and regulations which have been or shall be promulgated by the parties or agencies which administer the Acts.

Subcontractor shall comply with said requirements, standards and regulations and require and be directly responsible for compliance therewith on the part of its agents, employees, materialmen and subcontractors, and shall directly receive, respond to, defend and be responsible for all citations, assessments, fines or penalties which may be incurred by reason of its failure on the part of its agents, employees, materialmen or subcontractors to so comply.

A. The Subcontractor must develop a pre-job safety plan outlining any hazards and the procedures it will use to eliminate those hazards. Subcontractor will review its plan with PEPPER's field supervisory personnel and crews. This plan is to be submitted to the PEPPER Superintendent at least two (2) weeks prior to commencing the Work.

B. The Subcontractor's field personnel assigned to this Project, including subs of the Subcontractor, will abide by the PEPPER **Drug & Alcohol Policy** as further detailed in the Trade Partner Safety Handbook. In addition, Subcontractor will commit to no drug or alcohol use by its employees over the lunch period or any other break time. Subcontractor agrees to remove from the jobsite any of its employees or sub-subcontractor employees who violate this policy.

Sample

C. Subcontractor shall report immediately to PEPPER any injuries suffered by its employees or any injuries to other persons or property damage arising out of its operation. PEPPER shall be furnished one (1) copy of the written accident report within twenty-four (24) hours of the injury or damage.

D. Subcontractor will equip its personnel with all necessary personal protective equipment required by law or PEPPER. This includes, but is not limited to, hard hats, eye protection, foot and hand protection, ear protection, fall protection and respiratory protection.

E. Subcontractor will protect all its employees when using electric power equipment by utilizing Ground Fault Circuit Interrupters **at all times**. As supplemental protection, the Assured Equipment Grounding Program may be implemented. All branch circuit conductors shall be permitted only within cable assemblies or be multi-conductor cord or cable of a type identified for *hard usage* or *extra hard usage*. NEC Table 400-4 lists "hard" and "extra hard" usage wire types.

F. All of the Subcontractor's scaffolds and ladders shall be in compliance with all required safety regulations and manufacturers' requirements.

G. Subcontractor will comply with all applicable standards contained within OSHA's Construction Industry Regulations, Subpart M. With regard to steel erection and decking, Subcontractor and its employees shall comply with **specific fall protection guidelines** as contained within the PEPPER Trade Partner Safety Handbook and within the Instructions to Bidders. In addition, those Subcontractors engaged in the steel erection process will comply with all requirements of the revised Subpart R Standard, except where the requirements of PEPPER's Trade Partner Safety Handbook are more stringent. In such cases, the Subcontractor will abide by the stricter standard.

H. Subcontractor agrees to require all of its employees and sub-subcontractor's employees to abide by OSHA regulations and PEPPER's Trade Partner Safety Handbook on all PEPPER Projects. Subcontractor shall provide training to all of its employees with regard to the possible hazards associated with the tasks each employee performs and each employee must know and understand all of these safety regulations. Prior to entering the PEPPER jobsite, ALL PERSONS performing Work must attend the PEPPER jobsite safety orientation training.

I. Subcontractor's employees are required to attend PEPPER's Jobsite Orientation, prior to beginning Work on the site. Subcontractor shall coordinate and schedule the orientation with PEPPER's Superintendent in a timely manner for all personnel for this Project. This mandatory orientation consists of a general safety orientation and a Project-specific orientation for each person entering a PEPPER jobsite.

J. Subcontractor shall ensure that its jobsite supervisor has completed the 30-hour OSHA Construction Safety Course and Subcontractor shall provide PEPPER with certification of such training prior to the start of its Work.

K. Subcontractor shall perform a daily task hazard analysis and provide documentation of the same to the PEPPER Superintendent.

L. Subcontractor will hold weekly Tool Box Safety Meetings, led by its jobsite supervisor. Minutes of the Tool Box Safety Meetings, as well as a signature sheet of all attendees, are to be turned in to the PEPPER jobsite Superintendent weekly.

M. Subcontractor must provide first-aid equipment to be made accessible to its employees.

N. Subcontractor agrees to submit all necessary Material Safety Data Sheets, MSDS-OSHA Form 20 or equivalent, for all hazardous substances introduced on the jobsite and shall inform PEPPER's office prior to its introduction to the jobsite. Subcontractor must be in compliance with the OSHA Hazard Communication Standard 1926.59. It is imperative that the Material Safety Data Sheets be on file in PEPPER's office prior to Subcontractor's starting work on the site.

12. Price Escalation

This Subcontract includes any and all price escalation throughout the duration of the Project.

13. Time

TIME IS OF THE ESSENCE OF THIS SUBCONTRACT! Subcontractor shall supply a sufficient number of competent workers and shall cooperate with PEPPER and other Subcontractors in the scheduling and performance of its Work. Subcontractor shall commence its Work upon notification from PEPPER and will proceed towards completion in accordance with the Project Schedule as described in **Exhibit E** established by PEPPER, which may be adjusted from time to time to allow for proper coordination of all trades' work. Should Subcontractor fail to pursue or complete its Work in accordance with the Schedule established by PEPPER, it hereby agrees to indemnify PEPPER for any loss or damages caused by such delay, including all consequential damages suffered by PEPPER as the result of such delay.

Extensions of time for delays not caused by the Subcontractor or not within the Subcontractor's control shall be strictly governed by the terms of the Contract Documents. Subcontract must give PEPPER written notice of any potential delay within three (3) business days, or as otherwise stipulated within the Contract Documents, after such occurrence with an estimate of the additional time needed to overcome the delay. In no event will Subcontractor be entitled to any consideration for delays if it fails to give PEPPER written notice of the delay and such potential claims shall be deemed waived. Anything in the Contract Documents or this Subcontract Agreement to the contrary notwithstanding, an extension of time hereunder shall be Subcontractor's exclusive remedy in the event of a delay, no matter how or by whom caused and Subcontractor specifically waives any right it may otherwise have to increase in Subcontract Price or damages because of any delays. However, should Owner pay PEPPER for any excusable delays to Subcontractor's Work, PEPPER will adjust this Subcontract Price accordingly.

14. Schedule/Coordination/Labor Harmony

Subcontractor is obligated to perform work in accordance with the schedule as follows:

A. Subcontractor is required to prepare its detailed schedule within the scope of the preliminary Project Schedule so as not to impede the stated Project completion time.

Sample

B. Subcontractor's assistance and input, with detailed breakdown of work items and duration for each, is required to develop an agreeable and accurate final Project Schedule. Subcontractor shall submit a statement outlining start date(s), completion date and estimated times for delivery of the major components of its Work. Schedules shall be in the form of a bar chart and indicate durations in weeks. The schedule shall indicate, in detail, the status and progress of shop drawings and submittals, fabrications, delivery, and installation start/complete dates for various stages of Work. Subcontractor shall provide a detailed schedule five (5) business days after Subcontract is awarded.

C. Subcontractor shall cooperate and coordinate its Work with all other contractors and furnish them all details and information required for proper coordination of Work.

D. Subcontractor shall designate a single representative assigned to the Project who will be responsible for attending meetings, monitoring schedules and coordinating all activities. Subcontractor's representative shall have the authority to commit the Subcontractor to solutions and/or actions as agreed in these meetings.

E. Regularly scheduled progress meetings shall be held weekly, unless otherwise scheduled. It will be the responsibility of each Subcontractor to attend these meetings to determine the status of the Project and to report on the status of its Work.

F. It is expressly understood that scheduling requirements may require temporary omissions and out of sequence work as designated by PEPPER's Superintendent. All "come back" work required for this or other out of sequence work, including remobilization, shall be completed on a timely basis at no additional cost to PEPPER.

G. The Subcontractor shall (and shall expressly require in writing any of its sub-subcontractors to) employ only field labor and tradesmen to perform work on the site whose presence of the job will not result in strikes, work stoppages, picketing, or other labor disputes with any other field labor and tradesmen present on the Project site. The Subcontractor shall manage its work force so as to avoid labor disputes with its own or other trades on the job and shall keep current in the payment of all wages and benefits required to be paid to or on behalf of its employees working on the job under any collective bargaining agreements or trust agreements to which it is signatory. The diligent progress of the Work is of the essence and Subcontractor's violation of this clause shall be a material breach of this Agreement.

15. Overtime

When ordered in writing by PEPPER, Subcontractor shall perform base Subcontract Work during overtime hours. In the event overtime work is required because of Subcontractor's own delays to the Project Schedule, *i.e.* insufficient manpower, submitting shop drawings and other submittals too late for approval per the Project Schedule, no additional compensation will be granted. In the event overtime is required because of delays of others, Subcontractor shall be compensated for the net increased labor costs only.

16. Shop Drawings and Submittals

Subcontractor shall promptly submit Shop Drawings, Product Data, Samples and similar submittals required by the Contract Documents with reasonable promptness and in such sequence as to cause no delay in the Work or in the activities of PEPPER or other subcontractors.

17. Performance/Assignment/Amendments

PEPPER's failure to require strict performance of any provision of this Subcontract shall not constitute a waiver of its right to require strict performance in the future. Subcontractor shall not assign this Subcontract without the prior written permission of PEPPER. Any assignment for the benefit of Creditors, of Accounts, of Receivables or of any monies due under this Subcontract to a Creditor, Lender or Trustee shall be a material default of this Subcontract. A sale of a majority interest in Subcontractor shall be considered a default under this Subcontract. Once executed, this Agreement may only be amended in writing by PEPPER and the Subcontractor.

18. Default by Subcontractor

Should the Subcontractor fail in any manner to perform its Work properly or default in the performance of any provision of this Subcontract or suffer any delay not accepted by PEPPER and Owner as authorized under the Contract Documents, or should the Subcontractor suffer any form of financial distress so that it could not give reasonable assurance to PEPPER that it can continue to perform its obligations under this Subcontract, PEPPER may give written notice to the Subcontractor to begin with all necessary diligence to cure such defaults within a twenty-four (24) hour period or failing to do so, PEPPER may, without prejudice to any other remedies it may have under the law or in equity, terminate this Agreement and look to the Subcontractor for payment of all damages which it incurs ("Termination for Default"). PEPPER's remedies shall include, but not be limited to, its right to proceed with the Work with its own forces or with other contractors on a time and material or other appropriate basis, the cost of which will be charged against the balance of any sums due Subcontractor. In the event of such a breach, in addition to any other remedy PEPPER may have, the Subcontractor agrees to indemnify, defend, and hold PEPPER harmless from all losses, damages, expenses (including reasonable attorneys' fees), as well as any judgments suffered by PEPPER as a result of Subcontractor's acts or omissions in the performance of its Work. PEPPER shall have the right of set-off and to deduct from any balance due under this Subcontract Agreement or any other accounts of subcontracts under which PEPPER is holding funds due the Subcontractor, the amount of any losses, damages, or expenses as described above.

19. Legal Fees

In the event that PEPPER is deemed to be the prevailing party in any legal proceeding, arbitration or other form of dispute resolution procedure that may be commenced between the parties to this Agreement, whether in contract or in tort, PEPPER shall be entitled, in addition to such other relief as may be granted, to a reasonable sum for attorneys' fees and costs, which sum shall be determined by the court or forum in such proceeding.

20. Termination for Convenience

PEPPER shall have the absolute right to terminate all or part of the Work under this Subcontract for its own convenience with or without reason and in its sole discretion by giving written notice of termination effective upon receipt thereof by Subcontractor ("Termination for Convenience"). Termination for Default, if wrongly made, shall be treated as Termination for Convenience. If PEPPER terminates all or part of this Agreement for convenience, the Subcontractor shall be paid the actual cost of the Work, which includes materials and labor in place, plus the actual cost of any

Sample

materials properly delivered and stored on or off site at the direction of PEPPER (if PEPPER elects to retain such stored materials), plus a pro rata percentage of the Subcontractor's fee or stated profit equal to the percentage of completion (whichever is less), and which amounts are actually paid to PEPPER by Owner. If PEPPER terminates this Subcontract for convenience, Subcontractor shall not be entitled to anticipated profits on unperformed portions of the Work or to punitive or consequential damages. All of Subcontractor's warranty, guaranty, indemnity and dispute obligations for Work performed shall survive such Termination for Convenience

21. Key Personnel

Subcontractor hereby agrees that key personnel assigned to the Project will remain for the duration of this Work. Reassignment or removal of said key personnel will require PEPPER's approval.

22. Sub-Subcontractors

Subcontractor agrees not to sub-subcontract more than Five Percent (5%) of this Subcontract Agreement without the written consent of PEPPER. For all proposed sub-subcontractors in excess of Five Percent (5%), Subcontractor shall furnish PEPPER an AIA Document A-305 or equal Subcontractor's Qualification Statement, not less than five (5) business days prior to final execution of any sub-subcontractor agreement. In accordance with Project Contract Documents as defined in Article 1, Subcontractor agrees it shall not contract with any such proposed person or entity to whom the Owner or the Architect has a reasonable objection.

Subcontractor agrees that any part of Work performed for the Subcontractor by an approved sub-subcontractor shall be pursuant to a written subcontract between the Subcontractor and each sub-subcontractor. Said written subcontract shall contain provisions that:

A. Require the work be performed in accordance with the requirements of the Contract Documents.

B. Require the sub-subcontractor to carry and maintain liability insurance coverage in accordance with the Contract Documents.

C. Require the sub-subcontractor to agree to the construction schedule as outlined and/or detailed in Article 14, above.

D. Require the sub-subcontractor to acknowledge that PEPPER is an explicit third-party beneficiary of the subcontract between the Subcontractor and sub-subcontractor.

E. Require that the sub-subcontractor provide waivers and other required billing materials as set forth in Article 47, below.

F. Unless PEPPER requires current waivers of lien, upon receipt of payment from PEPPER, Subcontractor shall promptly disburse from such payment, in exchange for waivers, the sums due and owing to any sub-subcontractor and/or material supplier for its work included in PEPPER's payment to Subcontractor. Waivers must be supplied for sub-subcontractors and/or material suppliers at the time they are listed in the "This Payment" section of the Contractor's Affidavit provided within the waiver, and further lower tiers upon request.

G. Require the sub-subcontractor to indemnify and hold harmless the Owner, Architect, PEPPER and the Subcontractor from any and all claims for bodily injury by an employee of the sub-subcontractor or anyone directly or indirectly employed by it or for anyone whose acts it may be liable without limiting or restricting such indemnity by a limitation on the amount or type of damages, compensation or benefits payable by or for the sub-subcontractor under Workers' or Workmens' Compensation Acts, disability benefit or other employee benefit acts.

23. Access/Parking

The use of and access to the site shall be restricted to those areas and limited to those temporary roads authorized and designated by PEPPER's on-site Superintendent.

Parking on the jobsite is restricted to company vehicles and equipment only if allowed by PEPPER's Superintendent. Subcontractor's employees shall park in the designated areas.

24. Jobsite Offices/Storage

The Project site may have limited space available for storage; therefore, any on-site storage will require prior approval of PEPPER and the Project Superintendent. Subcontractors' jobsite trailers, materials, tools and equipment may be stored on the jobsite at locations approved by PEPPER and must be removed or relocated when directed. Subcontractor shall use, for this purpose only, the minimum space that is absolutely required for proper performance of the Work. Any damage or losses resulting from storage of material, tools and equipment shall be remedied at the cost of the Subcontractor. Each Subcontractor shall be responsible for erection, dismantling, maintenance, utilities, security, etc., that it may deem necessary in setting up its trailers, sheds and storage area.

Subcontractor may establish a temporary office at the jobsite except that the exact size and location of said facilities shall be subject to the approval of PEPPER's Superintendent. The temporary office, along with any electrical, telephone or similar service for this field office, shall be the responsibility of the Subcontractor. As the Work progresses, Subcontractor agrees to relocate and/or remove said facilities upon seventy-two (72) hours written notice form PEPPER's Superintendent.

25. Temporary Facilities

Temporary facilities furnished by PEPPER for this Subcontractor's use on the site shall be limited to the following:

A. Temporary sanitary services for Subcontractor's personnel.

B. Temporary non-potable water service only after the permanent tap is made at water main. Water will be available at a minimum of one location, adjacent to the construction area. It shall be the Subcontractor's responsibility to provide hook-ups and extensions as required and to coordinate with PEPPER's on-site Superintendent.

Sample

C. Temporary power and lighting for the building shall be specific to OSHA standards and provided by the electrical contractor for all contractors' use. If special or additional services are required, arrangements through the PEPPER on-site Superintendent will be necessary. However, the contractual relationship shall be directly between the on-site electrical contractor and Subcontractor.

D. Temporary power will be limited to 120-volt, single-phase temporary electric service in the construction area only after temporary or permanent power is established on the jobsite. If temporary power is not available or is insufficient for the Subcontractor, the Subcontractor shall furnish generators at its expense. The Subcontractor shall be required to provide extension cords for all power tools.

26. Hoisting and Scaffolding

Subcontractor agrees to be solely responsible for all hoisting of materials and all scaffolding necessary for the performance of its own Work unless otherwise stated. Unless expressly provided for in this Scope of Work, no provisions for hoisting or scaffolding will be provided by PEPPER. Any scaffolding or hoisting equipment used by Subcontractor must conform to all local code requirements including, but not necessarily limited to, those of state and federal OSHA. Subcontractor shall keep and maintain current maintenance logs for all cranes utilized by Subcontractor as of the date such cranes are delivered to the jobsite. All logs shall be readily available for review by PEPPER upon request.

27. Daily Reports

Subcontractor will submit a daily report to PEPPER's Superintendent for each day Subcontractor is working on the Project. The daily report should state:

A. The number of tradesmen that worked;
B. The positions of those tradesmen;
C. The number of hours each tradesman worked;
D. The specific hours each tradesman worked;
E. The shift worked by each tradesman: 1st, 2nd, or 3rd;
F. A brief description of the day's activities;
G. A two-day look ahead for scheduling purposes;
H. Any inspections, problems or otherwise pertinent information; and
I. Accidents that occurred during the day, if any.

28. Material Delivery

Material delivery to the jobsite shall be handled in accordance with the following:

A. Cost of all shipping of materials, freight to the jobsite and insurance of same is the responsibility of the Subcontractor.

B. Subcontractor must notify PEPPER's on-site Superintendent forty-eight (48) hours prior to delivering any materials. Copies of the delivery ticket will be stamped, showing the actual time and date shipment was received.

C. Each shipment of material shall contain a packing slip with the correct nomenclature of contents and the box or carton containing this information must be so marked. At the time of shipment, one (1) copy of said packing slip shall be forwarded to the destination of shipment to alert PEPPER's Superintendent as to what material is in transit so that arrangements can be made at least forty-eight (48) hours in advance to receive, allocate and store said material.

If Subcontractor fails to adhere to the foregoing notification and other requirements, PEPPER reserves the right to refuse, warehouse, or return to the carrier the shipment in question. All related costs incurred by PEPPER, *e.g.*, handling, storage, protection, etc., will be borne by Subcontractor.

29. Owner's Work Forces

Subcontractor is advised that the Owner may, at its discretion, employ other contractors or employees of the Owner to perform work on this Project. In such event, Subcontractor shall cooperate in scheduling activities in order that the work of all parties can be completed on a timely basis.

Subcontractor hereby agrees not to perform any work directly for the Owner, or its agents, on the Project while under contract with PEPPER without PEPPER's prior approval, which shall not be unreasonably withheld. Failure to abide by this provision will be considered a material breach of this Subcontract Agreement.

30. Layout and Engineering

All Subcontractors will perform layout and engineering as required to complete the Work within the scope of their respective Subcontracts from vertical and horizontal principal control lines and grades established by PEPPER.

31. Protection of Work

Subcontractor shall take reasonable precautions for safety of and shall provide reasonable protection to prevent damage, injury, or loss to:

A. Employees on the jobsite and other persons who may be affected;

B. The work and materials and equipment to be incorporated therein, whether in storage on or off the site, under care, custody, or control of the Subcontractor or sub-subcontractors; and

C. Other property at the site or adjacent thereto, such as trees, shrubs, lawns, walks, pavements, roadways, structures and utilities not designated for removal, relocation or replacement in the course of construction.

Sample

Subcontractor shall promptly remedy damage and loss (other than damage or loss insured under property insurance required by the Contract Documents) to property as described above caused in whole or in part by the Subcontractor or its sub-subcontractor, or anyone directly or indirectly employed by any of them, or by anyone for whose acts they may be liable and for whom the Subcontractor is response, except damage or loss attributable to acts or omissions of the Owner, Architect, PEPPER or anyone directly or indirectly employed by them, or by anyone for whose acts they may be liable and not attributable to the fault or negligence of the Subcontractor.

32. Dewatering

Subcontractors who are performing excavation, trenching, utility and/or concrete work are responsible for keeping their excavations free of water during construction.

33. Subcontractor's Tools and Equipment

Subcontractor shall assume all risks and liability for damage or loss to all materials, tools or equipment not incorporated into the Work and which belong to it or are under its care, custody or control.

34. Cleanup

Subcontractor must provide cleanup and disposal of debris resulting from its Work on a daily basis in order keep the Project clean, orderly and hazard free. Material will be placed in dumpsters provided by PEPPER. Location of dumpsters will be at PEPPER's discretion.

Upon completion of its Work and prior to leaving the site, Subcontractor must receive approval and acceptance by PEPPER that all final cleanup requirements have been met and that the area is ready for final inspection. When directed in writing in the field by PEPPER's Superintendent, Subcontractor agrees to clean up all debris attributable to its Work within twenty-four (24) hours' written notice for any given work area, or accept the appropriate back charges for clean-up performed by PEPPER or other contractors, which will be billed to Subcontractor on a monthly basis no later than the following month in which the charges are incurred.

35. Environmental Compliance

Subcontractor agrees to comply with pollution and environmental protection regulations for the use of water and other services. Subcontractor further agrees to discharge wastes and storm water drainage from the Project site and to comply with any "Environmental Impact" commitments that may have been made by the Owner in securing approval to proceed with construction of this Project. All waste materials and substances (*e.g.*, solvents, cleaners, waste oils, etc.) shall be handled and /or disposed of by this Subcontractor in full compliance with all applicable federal, state and local statutes, regulations, ordinances and rules.

36. Cutting and Patching

Subcontractor shall perform cutting, patching, fire safing and caulking, as required to complete the Work within the Scope of its Subcontract.

37. Revisions/Changes

When PEPPER so orders in writing, the Subcontractor shall make any and all changes in the Work which are in the general Scope of this Agreement. Adjustments in the Subcontract Price or Subcontract time resulting from such changes, if any, shall be set forth in a Subcontract Change Order pursuant to the Contract Documents. No adjustment shall be made for any changes performed by the Subcontractor that have not been ordered in writing by PEPPER.

As additional information or revisions are provided by PEPPER, Owner or Architect, the Subcontractor shall review the same for its Work and notify PEPPER within ten (10) business days of any cost or schedule changes to the Subcontract Agreement. If no response is received within this time frame, it will be assumed that no additional costs or time extensions will apply. Any changes which are made without prior written authorization of PEPPER's Project Manager will be done at Subcontractor's own risk and payment for such changes is not guaranteed. All revisions causing potential cost increases to the Subcontractor must be approved prior to commencement of said Work. Compensation for extra work shall be by one or more of the following methods at the option of PEPPER:

A. Unit prices contained in the Scope of Work;
B. Alternate prices contained in the Scope of Work;
C. Negotiated lump sums;
D. Negotiated unit prices; or
E. Cost plus compensation.

In the case of cost plus compensation, costs shall be defined as and specifically include the following: Cost of materials, including sales tax and cost of delivery; cost of labor in the field, including social security, old age and unemployment insurance; Worker's Compensation and general liability costs; bond premiums and rental value of the power tools and equipment at rates not to exceed those contained in the current edition of the Associated Equipment Distributors Construction Equipment Rental Rates.

Overhead and profit shall include the following: Costs to prepare estimates or shop drawings, wages of superintendents, project managers, non-working foremen (unless specifically included in the Scope of Work), timekeepers, watchmen and clerks; hand tools; incidentals; general office expenses; interest expense; warranty expenses and all other expenses not included in "costs" as defined above.

Unless otherwise stipulated in the Owner Agreement, the following percentages for overhead and profit are to be added to Subcontractor's approved costs:

1) For any work performed by Subcontractor's own forces, 10% for overhead and 5% for profit.

2) For work performed by sub-subcontractor, 0% for overhead and 5% for profits of the amount due the sub-subcontractor.

To facilitate checking of quotations for extras or credits, all proposals must be accompanied by complete itemization of cost including labor, materials, equipment and sub-subcontractors.

For Field Changes, time and material tickets signed by the PEPPER Superintendent at the jobsite are to verify actual hours worked, materials and equipment used and must be signed within twenty-four (24) hours of completing the Work. The verification that the Work is additional work outside of the contractual Scope is subject to approval by PEPPER's Project Manager. No changes will be approved without such itemization. For Field Changes, Extra Work Orders or any other type of Change Directive where the performance of the additional work comes before the approval of the cost, the Subcontractor shall promptly submit its Change Request within the time directed by PEPPER but if a specific amount of time is not set for submission of such costs, then not later than twenty-one (21) business days after the completion of the additional work.

A Pending Change Request Log shall be submitted electronically by the Subcontractor to the PEPPER Project Manager at the time of each monthly Application for Payment submission. Such Log shall identify any outstanding change requests ("CRs") as well as correlating CR date, description, dollar value and the status of the Change Request. Receipt of such Log does not imply acknowledgement or approval of identified CRs, but rather that such CRs have been submitted for review. CRs are finalized when incorporated into Subcontractor's Subcontract via Change Order. Change Order pricing must be in accordance with the Contract. Monthly progress payments may be delayed or withheld by PEPPER if such Pending CR Log is not timely provided by Subcontractor to PEPPER.

38. Testing

Subcontractor will be responsible for costs of retesting and correcting or replacing Work that fails the Owner's testing or that of local authorities. This Subcontractor is also responsible for all costs incurred by other trades due to testing failure of its Work.

39. Punch List

All punch list work will be completed within ten (10) business days. Subcontractor will give written notification upon completion of punch list.

40. Record Documents

Subcontractor is required to maintain an up-to-date set of "As-Built" drawings at all times. At the completion of Subcontractor's Work, Subcontractor will provide to PEPPER the number of copies of "As-Built" drawings that are required per the Contract Documents and one (1) additional copy of PEPPER's use. Subcontractor is also to provide copies of Owner's Operational/Instructional/Maintenance Manuals and training as required by the Project Specifications.

41. Warranties

Subcontractor shall provide a separate written warranty in triplicate at the time of final billing, guaranteeing its Work against defects in materials and/or workmanship for the period required in the Specifications. If required by the Contract Documents, Subcontractor shall also provide a manufacturer's warranty for installed materials and equipment. All warranties shall meet the express terms and conditions required under the provisions of the Contract Documents for the period called for in the Specifications or, if not specified, for twelve (12) months from acceptance of Project by Owner. Subcontractor shall promptly repair or replace any such defects occurring within the warranty period without cost or liability to PEPPER or Owner.

42. UAS Usage

Subcontractor shall not be permitted to use an unmanned aircraft system ("UAS") on the Project site without the prior written approval of PEPPER. Should the use of any UAS be permitted, Subcontractor shall submit proof of compliance with all Federal Aviation Administration, state, county, local, and any other applicable laws and regulations in effect, as well as any other identified requirements and provide proof of insurance as set forth within **Exhibit C** Insurance Requirements at Article H.

43. Equal Employment Opportunity

A. Nondiscrimination, Affirmative Action and Federal Contract Compliance:

During the performance of this Subcontract, the Subcontractor agrees as follows:

1) The Subcontractor will not discriminate against any employee or applicant for employment because of race, color, religion, sex, or national origin. The Subcontractor will take affirmative action to ensure that applicants are employed, and that employees are treated during employment, without regard to their race, color, religion, sex or national origin. Such action shall include, but not be limited to, the following: employment, upgrading, demotion, or transfer, recruitment or recruitment advertising; layoff or termination; rates of pay or other forms of compensation; and selection for training, including apprenticeship. The Subcontractor agrees to post in conspicuous places, available to employees and applicants for employment, notices to be provided by the contracting officer setting forth the provisions of this nondiscrimination clause.

2) To supplement Paragraph 1 above (to the extent applicable and that additional requirements are proscribed in the following), pursuant to 41 C.F.R. Sections 60-1.4(d), 60-250.5(d), and 60-741.5(d), PEPPER incorporates by reference the provisions found at **41 C.F.R. Sections 60-1.4(a)(b),** 41 C.F.R. Section 60-4.3(a), **41 C.F.R. Section 60-250.5 and/or Section 60-300.5**, and **41 C.F.R. Section 60-741.5, Executive Order 13496 and 29 C.F.R. Part 471, Appendix A to Subpart A, if applicable**, into this Subcontract. Subcontractor is hereby notified that it has an obligation to determine whether the Work it is performing, or the goods and services it is providing to PEPPER, are provided pursuant to a federal government contract or a federally assisted construction contract. If so, Subcontractor shall determine the extent to which the provisions of Executive Order 11246, the Vietnam Era Veterans' Readjustment Assistance Act of 1974, and Section 503 of the Rehabilitation Act of 1973, as amended, along with their respective implementing regulations found at 41 C.F.R.

Part 60, apply to the terms of this specific Subcontract and shall comply with such provisions. Note: federal construction subcontractors or federally-assisted construction subcontractors are advised to review the Department of Labor's, Office of Federal Contract Compliance Programs (OFCCP) Technical Assistance Guide for Federal Construction Contractors to understand the requirements for both federal contractors and subcontractors.

3) The Subcontractor shall comply with all federal, state, and local equal employment and affirmative action statutes, rules and regulations including, to the extent applicable given the geographical location of the Project (and not in limitation of any other particular law that would pertain to the Subcontractor's Scope of Work), and the Indiana Civil Rights Law, IC 22-9 and 910 IAC, the Indiana Prevailing Wage Act, IC 5-16-7, et seq., if applicable, and any subsequent amendments to or regulations thereof.

B. Default

Violation of any anti-discrimination or affirmative action requirements, whether or not expressly described herein, that are lawfully imposed on the operation of the Subcontractor's business in the performance of the Scope of Work described herein, shall be a material breach of this Subcontract and a basis for default under Article 18, above.

44. <u>Scope of Work</u>

Scope of Subcontractor's Work shall include, but not necessarily be limited to, the following:
See Scope of Work, attached hereto at **Exhibit B**.

45. <u>Dispute Resolution</u>

A. If arbitration of disputes is provided for in the Contract Documents, and if PEPPER, in its sole discretion, elects to demand arbitration with Subcontractor individually, or as part of joint proceedings with Owner or others, any dispute between PEPPER and Subcontractor involving or arising out of this Subcontract Agreement, including the breach thereof, shall be decided by arbitration as provided for in the Contract Documents. If PEPPER elects to demand arbitration with Subcontractor individually and subject to applicable law, such arbitration proceedings shall be held in Indianapolis, IN or such other place as PEPPER may designate. The award rendered by the arbitrator(s) shall be final, and judgment may be entered upon it in accordance with applicable law in any court having jurisdiction thereof.

B. If the Contract Documents do not provide for arbitration, and if PEPPER, in its sole discretion, elects to demand arbitration with Subcontractor individually, or as part of proceedings with Owner or other parties, any dispute arising between PEPPER and Subcontractor under the Subcontract Agreement, including the breach thereof, shall be decided by arbitration in accordance with the then current Construction Industry Arbitration Rules of the American Arbitration Association. The venue of such arbitration shall be Indianapolis, IN or such other place as PEPPER may designate. The award rendered by the arbitrator(s) shall be final, and judgment may be entered upon it in accordance with applicable law in any court having jurisdiction thereof.

C. Subcontractor further agrees that, upon request by PEPPER, resolution of any dispute between PEPPER and Subcontractor may be consolidated with resolution of any dispute between Owner and PEPPER, whether in litigation or arbitration, at PEPPER's sole discretion, and that Subcontractor will join in and be bound by the result of any such dispute resolution process, even if such consolidation and/or joinder requires resolution of Subcontractor disputes in a forum not provided for in this Subcontract and/or otherwise not selected by Subcontractor and even if Subcontractor is not permitted to become a named party to such proceeding or process. Subcontractor agrees not to institute (and to stay) legal remedies against PEPPER until all legal proceedings against Owner with respect to such claim are final and complete. Subcontractor shall not be entitled to and hereby agrees to make no claim for further payment beyond the Subcontract Price for costs arising out of the site conditions, acts, errors, or omissions of Owner, Architect, or other agents or representatives of Owner, other than to the extent that PEPPER may receive funds from the Owner on behalf of Subcontractor, which funds shall be paid by PEPPER to Subcontractor less costs and expenses incurred by PEPPER in prosecuting such claims.

D. Notwithstanding any provision to the contrary, any dispute involving Owner, PEPPER and Subcontractor shall be resolved in accordance with the law specified in the Owner Agreement.

46. Strict Compliance

Subcontractor is bound to strict compliance with this Subcontract Agreement. PEPPER's failure to insist upon strict compliance with any of the provisions of this Agreement, or failure to exercise any options provided, shall not be construed as a waiver or an estoppel of PEPPER's right to thereafter require such strict compliance or to exercise such option.

Sample

47. BILLING PROCEDURES
PEPPER CONSTRUCTION COMPANY OF INDIANA, LLC ACCOUNTING PACKAGE
SUBCONTRACTOR APPLICATION FOR PAYMENT AND PAYMENT CONDITIONS

The following terms and conditions are an integral part of Subcontract Agreement _____.
Please direct any billing questions to PEPPER's Accountant for this Project, _____ at _____ and ___@pepperconstruction.com.

APPLICATION FOR PAYMENT

PEPPER CONSTRUCTION COMPANY OF INDIANA, LLC IS ONLY ABLE TO PROCESS INVOICES THROUGH OUR ACCOUNTING SYSTEM AFTER OUR SUBCONTRACT AGREEMENT HAS BEEN SIGNED WITHOUT ALTERATION AND RETURNED TO US, INCLUDING APPROPRIATE INSURANCE AND SAFETY DOCUMENTATION.

CHANGES TO SUBCONTRACTOR'S SUBCONTRACT CANNOT BE BILLED UNTIL A FORMAL CHANGE ORDER HAS BEEN RECEIVED BY SUBCONTRACTOR FROM AN AUTHORIZED REPRESENTATIVE OF PEPPER CONSTRUCTION COMPANY OF INDIANA, LLC AND EXECUTED BY BOTH SUBCONTRACTOR AND PEPPER. ONCE APPROVED, CHANGES SHOULD NOT BE SEPARATELY BILLED, BUT SHOULD BE INCLUDED IN SUBCONTRACTOR'S MONTHLY BILLING AT THE REVISED SUBCONTRACT AMOUNT.

1. Given the requirements of the Owner Agreement, Applications for Payment for Work performed and accepted by Owner, shall include the following:

   One (1) of each of the following documents:
   a) Affidavit, which must include values for sub-subcontractors in the "Amount of This Request" column at the time the sub-subcontractors are listed in the "Completed This Period" column of the Schedule of Values;
   b) Application and Certificate for Payment signed and notarized (AIA G702);
   c) Schedule of Values (AIA G703) in format approved by PEPPER;
   d) Stored materials documentation, as required by Owner;
   e) Pending Change Request Log, submitted electronically, identifying outstanding Change Requests ("CRs"), as well as correlating CR date, description, dollar value and status of the Change Request, as further described at Article 37; and

   Three (3) of each of the following documents:
   f) Partial or Final Waivers of Lien as required, including waivers from all sub-subcontractors and Material Suppliers listed in the "This Payment" section of the Contractor's Affidavit provided within the Waiver, and for further lower tiers upon request.

2. All invoice packages must be received no later than the 15thth of the month for Work performed, as projected, from the first to the last day of the month. Invoice packages not received by this deadline WILL NOT be processed until the following month.

3. Unless PEPPER requires current Waivers of Lien, upon PEPPER's receipt of payment form the Owner, Subcontractor will be contacted with the correct information to be included in the Waiver. The Waiver and Affidavit form to be used shall be that attached hereto, unless otherwise specified by Owner.

4. Subcontractor shall, as often as requested by PEPPER, furnish such information, evidence, and substantiation as PEPPER may require with respect to the extent and value of the current progress of Subcontractor's Work. Subcontractor shall also furnish, upon request, similar detail regarding the nature and extent of all obligations incurred by Subcontractor in connection with the Work and all payments made by Subcontractor on account thereof.

5. Subcontractor shall also furnish, as required by PEPPER in its sole discretion, such partial or final lien waivers or releases as PEPPER deems necessary to ensure that Subcontractor has paid all parties furnishing any labor, material, or services in furtherance of any Work furnished hereunder. If required by PEPPER, the furnishing of such lien waivers and releases shall be a condition precedent to any payment hereunder. Moreover, no prior failure of PEPPER to require such releases and waivers shall limit PEPPER's right to subsequently require them.

   6. Accordingly, Subcontractor is intended to assume the risk of Owner's non-payment under the circumstances set forth herein. Owner's payment to PEPPER is a condition precedent to PEPPER's obligation to pay Subcontractor unless the Owner's refusal to pay is due to a material breach by PEPPER of its Agreement with the Owner unrelated to the Work of the Subcontractor. If payment to PEPPER is received from Owner and provided the billing and insurance requirements have been met as required under this Subcontract Agreement, all payments by PEPPER on Subcontractor's Work accepted by Owner shall be made in the net amount of its request within two (2) business days of receipt of Owner's payment.

7. At the time the Final Waiver is required, it shall be in the full amount of the adjusted Subcontract Price.

8. Retainage shall be held in accord with the Contract Documents between Owner and PEPPER and paid to Subcontractor after approval and acceptance by Owner and upon payment by Owner to PEPPER.

Sample

9. In the event Subcontractor suffers financial distress as described in Article 18, above, PEPPER shall, in its sole and absolute discretion, have the right but not the obligation to pay sub-subcontractors or suppliers directly or tender payment jointly to Subcontractor and lower tiers.

10. Subcontractor and its lower tier subcontractors shall be solely responsible for and make all contributions or payments required to be made to any health and welfare, pension, vacation, apprenticeship, training or other fringe benefit or employee benefit program or trust with whom Subcontractor or its lower tier subcontractors are affiliated (collectively, a "Trust") within thirty (30) days from receipt of payment from PEPPER. As a condition precedent to any progress payment, PEPPER shall have the right to:
    a) require lien waivers and other certification of payment and confirmation (such as a letter of good standing), for the benefit of PEPPER, that Subcontractor and its lower tier subcontractors are current (within thirty (30) days) in making all contributions or payments to a Trust;
    (b) require Subcontractor to submit payroll reports on a weekly basis, in form and substance as required by PEPPER, signed and attested to by a duly authorized officer of the Subcontractor (a "Certified Payroll Report"); and/or
    (c) pay a Trust directly as part of a progress payment.

Sample

WAIVER OF LIEN TO DATE

STATE of _____) SS
County of _____) SS

TO WHOM IT MAY CONCERN:
WHEREAS the undersigned has been employed by _____ to furnish _____ for the premises known as _____ of which _____ is the owner.

THE undersigned, for and in consideration of _____ ($_____) Dollars, and other good and valuable considerations, the receipt whereof is hereby acknowledged, do(es) hereby waive and release any and all lien or claim of, or right to, lien, under the statutes of the State of _____ , relating to mechanics' liens, with respect to and on said above-described premises, and the improvements thereon, and on the material, fixtures, apparatus or machinery furnished, and on the moneys, funds or other considerations due or to become due from the owner, on account of labor, services, material, fixtures, apparatus or machinery, furnished to this date by the undersigned for the above-described premises, including extras.*

Given under my hand and sealed this _____ day of _____, 20_____

Signature and Seal: _____

*Extras include but are not limited to change orders, both oral and written, to the contract

CONTRACTOR'S AFFIDAVIT

STATE of _____) SS
County of _____) SS

TO WHOM IT MAY CONCERN:
THE undersigned, being duly sworn, deposes and says that he/she is _____ of the _____ who is contractor for the _____ work on the building located at _____ owned by _____.
That the total amount of the contract, including additional work and Change Orders, is $_____ on which he/she has received payment of $_____ prior to this payment. That all waivers are true, correct and is genuine and delivered unconditionally and that there is no claim, either legal or equitable, to defeat the validity of said waivers. That the following are the names of all parties who have furnished material or labor, or both, for said work and all parties having contracts or subcontracts for specific portions of said work or for material entering into the construction thereof and the amount due or to become due to each, and that the items mentioned include all labor and material required to complete said work according to plans and specifications:

NAMES	WHAT FOR	CONTRACT PRICE INCLUDING EXTRAS*	AMOUNT PAID	THIS PAYMENT	BALANCE DUE
TOTAL LABOR AND MATERIAL INCLUDING EXTRAS* TO COMPLETE					

That there are no other contracts for said work outstanding, and that there is nothing due or to become due to any person for material, labor or other work of any kind done or to be done upon or in connection with said work other than above stated.

Signed this _____ day of _____, 20_____

Signature: _____

Subscribed and sworn to before me this _____ day of _____, 20_____

Signature: _____

*Extras include but are not limited to change orders, both oral and written, to the contract

Sample

FINAL WAIVER OF LIEN

STATE of _____) SS
County of _____) SS

TO WHOM IT MAY CONCERN:
WHEREAS the undersigned has been employed by _____ to furnish _____ for the premises known as _____ of which _____ is the owner.

THE undersigned, for and in consideration of _____ ($_____) Dollars, and other good and valuable considerations, the receipt whereof is hereby acknowledged, do(es) hereby waive and release any and all lien or claim of, or right to, lien under the statutes of the State of _____ , relating to mechanics' liens, with respect to and on said above-described premises, and the improvements thereon, and on the material, fixtures, apparatus or machinery furnished, and on the moneys, funds or other considerations due or to become due from the owner, on account of labor, services, material, fixtures, apparatus or machinery, heretofore furnished, or which may be furnished at any time hereafter, by the undersigned for the above-described premises, including extras.*

Given under my hand and sealed this _____ day of _____, 20_____

Signature and Seal: _____

*Extras include but are not limited to change orders, both oral and written, to the contract

CONTRACTOR'S AFFIDAVIT

STATE of _____) SS
County of _____) SS

TO WHOM IT MAY CONCERN:
THE undersigned, being duly sworn, deposes and says that he/she is _____ of the _____ who is contractor for the _____ work on the building located at _____ owned by _____ .
That the total amount of the contract, including additional work and Change Orders, is $_____ on which he/she has received payment of $_____ prior to this payment. That all waivers are true, correct and is genuine and delivered unconditionally and that there is no claim, either legal or equitable, to defeat the validity of said waivers. That the following are the names of all parties who have furnished material or labor, or both, for said work and all parties having contracts or subcontracts for specific portions of said work or for material entering into the construction thereof and the amount due or to become due to each, and that the items mentioned include all labor and material required to complete said work according to plans and specifications:

NAMES	WHAT FOR	CONTRACT PRICE INCLUDING EXTRAS*	AMOUNT PAID	THIS PAYMENT	BALANCE DUE
TOTAL LABOR AND MATERIAL INCLUDING EXTRAS* TO COMPLETE					

That there are no other contracts for said work outstanding, and that there is nothing due or to become due to any person for material, labor or other work of any kind done or to be done upon or in connection with said work other than above stated.

Signed this _____ day of _____, 20_____

Signature: _____

Subscribed and sworn to before me this _____ day of _____, 20_____

Signature: _____

*Extras include but are not limited to change orders, both oral and written, to the contract

Sample

INSURANCE REQUIREMENTS

Pepper Construction
Tomorrow Transformed

EXHIBIT C – Non-CCIP

Pepper Construction Company of Indiana, LLC

Subcontractor Insurance Requirements

Subcontractor:
Vendor #:

PLEASE ISSUE A CERTIFICATE OF INSURANCE FOR THE PROJECT REFERENCED BELOW IN ACCORDANCE WITH THE FOLLOWING REQUIREMENTS. SUBMIT TO THE SAME ADDRESS AS SHOWN AS CERTIFICATE HOLDER. THANK YOU.

JOB DESCRIPTION:

Job Number:
Job Name:
Job Address:

ADDITIONAL INSUREDS TO BE LISTED: (Must be listed exactly as shown)

Pepper Construction Company of Indiana, LLC
Owner
Architect

CERTIFICATE HOLDER:

PEPPER CONSTRUCTION COMPANY OF INDIANA, LLC
Attention:

EXPERIENCE MODIFICATION RATING (EMR):

PEPPER CONSTRUCTION COMPANY OF INDIANA, LLC ("PEPPER") has a strong commitment to safety on our construction projects and it is important that our subcontractors display that same commitment. Therefore, PEPPER requests that each Subcontractor instruct its insurance company to send PEPPER a letter indicating its Experience Modification Rating (EMR) for the last three (3) years.

Contractually, the Subcontractor is required to keep a valid Certificate of Insurance on file for a period of three (3) years from the date of Substantial Completion.

Any questions, please call

EXHIBIT C – Non-CCIP

Pepper Construction Company of Indiana, LLC Subcontractor Insurance Requirements

Subcontractor shall maintain, at its own expense, during the progress of the Work and throughout the warranty period, insurance written by insurance companies acceptable to PEPPER (as further described below) with the minimum limits and coverage as shown below or, if higher, the requirements set forth in the Contract Documents. For purposes of this **Exhibit C – Non-CCIP**, subcontractors performing, in whole or in part, the following major trade classifications shall be referred to as "Major Trade Subcontractors": Concrete//Pre-cast Concrete; Curtainwall; Electrical; Elevator; Excavation/Earthwork; Fire Protection; Hoisting/Tower Crane; HVAC; Plumbing/Piping; Shoring/Underpinning; Soil Stabilization; Special Foundations/Caissons, and Steel. To the fullest extent allowed under applicable law, Subcontractor shall comply with the following insurance requirements:

A. Unless otherwise required by the Contract Documents, at a minimum, Subcontractor's insurance shall be provided by:
   1) Insurer(s) authorized to transact business in the state where the Work or operations will be performed by Subcontractor; and
   2) Admitted insurers that maintain an A.M. Best's rating of not less than A-/VIII.

B. WORKERS' COMPENSATION including Employers' Liability insurance in an amount of at least:
   1) **$1,000,000**, bodily injury by accident – each accident;
   2) **$1,000,000**, bodily injury by disease – policy limit; and
   3) **$1,000,000**, bodily injury by disease each employee.

   Where applicable, evidence of coverage shall be required for Longshore and Harbor Workers' Compensation, Maritime coverage, and Federal Employers' Liability Act; additionally, Subcontractor's coverage shall include all Other States coverage and other unique exposures requiring endorsement of coverage.

   Workers' Compensation coverage must extend to every employee, including owners/officers of a closely held corporation and/or individuals operating as a sole proprietorship or partnership.

C. COMMERCIAL GENERAL LIABILITY ("CGL"). Major Trade Subcontractors shall provide and maintain **a minimum CGL primary insurance limit** of not less than **$2,000,000** per occurrence for both Premises/Ongoing Operations, **$2,000,000** Products-Completed Operations aggregate; and **$2,000,000** general aggregate applicable to claims other than Products-Completed Operations. All other subcontractors shall provide and maintain CGL insurance with a limit of not less than **$1,000,000** per occurrence for both Premises/Ongoing Operations, **$1,000,000** Products-Completed Operations aggregate; and **$1,000,000** general aggregate applicable to claims other than Products-Completed Operations. To the extent that Subcontractor's CGL insurance is subject to aggregate limits, the policy shall be endorsed so as to apply such aggregate limits separately to each Project with an **ISO Endorsement CG 25 03** or equivalent.

   Coverage afforded under Subcontractor's CGL and any Commercial Umbrella insurance shall be provided on an occurrence basis and shall be subject to the terms of the Insurance Services Office ("ISO") Commercial General Liability Coverage Form CG 0001, or an equivalent form providing coverage at least as broad as the ISO form specified. There shall be no limitations or exclusions of coverage beyond those contained in the standard coverage form and coverage shall include liability arising from Premises/Operations, Elevators, Broad-Form Property Damage, Independent Contractors, Contractual Liability, Products-Completed Operations including Construction Defect, Contractual Liability or Personal Injury and Advertising Injury.

   Subcontractor's CGL coverage shall include an endorsement or other policy provision providing for a modified definition of occurrence establishing faulty workmanship as an occurrence; this includes but is not limited to Work done in the States of Delaware, Illinois, Iowa, Kentucky, Montana, New Jersey, North Carolina, Ohio, Oklahoma, Pennsylvania, West Virginia, and the District of Columbia.

   If Subcontractor's Scope of Work requires the use of a crane, rigging operations, hoisting, or coverage related to the movement of others' property in connection with this Subcontract, Subcontractor shall have the "care, custody, and control" exclusion deleted from its General Liability policy. In the event such exclusion is not deleted, Subcontractor shall purchase and maintain in effect Rigger's Liability coverage at least equal to the highest value of property to be hoisted or moved.

   All coverages shall be maintained in force for a period of three (3) years after Substantial Completion of the Project or for such period of time as is described in the Contract Documents ("Products-Completed Operations Period"). All terms and conditions of such coverage shall be maintained during this Products-Completed Operations Period, including the required coverage limits and the requirement to provide PEPPER and Owner with coverage as an **Additional Insured** for Products-Completed Operations. XCU and Work From Height Exclusions must be deleted when applicable to operations performed by the Subcontractor. XCU coverage must be identified as being included on the Certificate of Insurance.

D. COMMERCIAL UMBRELLA LIABILITY ("Umbrella Liability") shall be maintained by Subcontractor, providing the same coverage and with the same **Additional Insureds** as the primary policy in the amount of **$5,000,000** for Major Trade Subcontractors and **$1,000,000** for all other Subcontractors. All terms and conditions of such coverage shall be maintained during the three (3) year Project-Completed Operations Period, including the required coverage limits and the requirement to provide PEPPER and Owner with coverage as an **Additional Insured** for Products- Completed Operations. Umbrella Liability insurance required under this Subcontract shall follow the form of the Commercial General Liability insurance, Business/Commercial Automobile insurance, and Employers' Liability insurance as required in the Subcontract. The Umbrella Liability policy must be identified as 'follow form' on the Certificate of Insurance. To the extent that Subcontractor's Umbrella Liability insurance is subject to aggregate limits, policies shall be endorsed so as to apply such aggregate limits separately to each Project.

   When providing a Blanket Certificate of Insurance, the following wording must be included: "*All Work performed by [Subcontractor Company Name] for all Pepper Construction Company of Indiana, LLC jobsites. Additional Insureds: Pepper Construction Company of Indiana, LLC and all others identified at **Exhibit C – Non-CCIP** of the Subcontract Agreement."*

E. BUSINESS/COMMERCIAL AUTOMOBILE LIABILITY on an accident basis covering all Owned, Leased, Non-Owned and Hired Vehicles providing limits of liability for Bodily Injury and Property Damage of **$1,000,000** each occurrence, including its own employees.

The waiver of subrogation, as required in Article P, below, shall be in favor of Indemnitees and Additional Insureds and shall be affirmed on the policy by **ISO Endorsement CA 04 44 03 10** or equivalent.

When applicable, the Business/Commercial Automobile Liability policy shall include **MCS-90 Endorsement** in compliance with the Federal Motor Carrier Safety Administration ("FMCSA").

If Subcontractor's Work involves the transport of pollutants, its Business/Commercial Automobile Liability policy shall be endorsed with Pollution Liability – Broadened Pollution for Covered Autos **ISO CA 99 48 10 01** or equivalent.

F. **CONTRACTOR'S POLLUTION LIABILITY insurance shall be provided by Subcontractor with minimum limits of $1,000,000** per occurrence and **$1,000,000** per aggregate and shall apply to bodily injury, property damage or other losses due to a pollution incident or event arising from Subcontractor's activities and shall apply for at least the following types of Subcontractors: building enclosure systems, drywall/insulation, MEP (including but not limited to HVAC, plumbing, sprinkler), and excavating. Further, such Pollution Liability policy shall include coverage for microbial matter, silica, mold, bacteria, and fungi. The policy must include the parties listed in this **Exhibit C – Non-CCIP** Insurance Requirements as **Additional Insureds** on a primary and non-contributory basis. Occurrence or claims-made coverage is acceptable. Occurrence-based coverage is to be maintained for five (5) years after completion. Claims-made coverage is to have a retroactive date prior to the date the Subcontractor commences contracting services on the Project and shall include an Extended Reporting Period of three (3) years. **Additional Insured** coverage under the Contractor's Pollution Liability shall apply to both ongoing and completed operations.

Subcontractor's Pollution Liability policy shall include coverage for actual or alleged on-site and off-site bodily injury and loss of damage to, or loss of use of property, directly or indirectly arising out of the discharge, dispersal, release or escape of smoke, vapors, soot, fumes, acids, alkalis, toxic chemicals, liquids or gas, waste materials or other irritants, contaminants or pollutants into or upon the land, the atmosphere or any water course or body of water, whether it be gradual or sudden and accidental.

Subcontractor and its lower tiers shall provide prompt notice to PEPPER of any claim asserted, the entry of any settlement, or rendering of any judgment which may be covered by this Pollution Liability policy with a total reserve valued at twenty-five percent (25%) of available policy limits of the Pollution Liability policy. Coverage shall not be limited to the dollar amount of the Subcontract Price, including all modifications.

G. CONTRACTOR'S PROFESSIONAL LIABILTY INSURANCE ("Design Liability") coverage applies to acts, errors, or omissions arising from Subcontractor's professional services. If Subcontractor provides any architectural or professional engineering service, by its employees or through others, (regardless whether such service does not result in stamped or sealed submissions) including any surveying, soils analysis, approval of materials, equipment or design, connections, or sizing of members for any earth retention, shoring, dewatering, mechanical, electrical, plumbing, fire protection, windows, wall systems, structural walls, precast, elevators, roofing, drainage or communications systems, the Subcontractor shall furnish PEPPER with an appropriate certificate, including any endorsements, directly relating to the Project which shall remain in effect for a period of five (5) years after the date of final completion identifying the Subcontractor's professional liability insurance coverage and stipulating amounts of coverage at not less than **$2,000,000** with Subcontractor's deductible not to exceed **$100,000** insuring Subcontractor's proper performance of its Design Services. The Professional Liability policy shall be maintained without interruption for no less than five (5) years after the date of final payment to Subcontractor. If the insurance policy is written on a "claims-made" form, the policy must include a three (3) year "Extended Reporting Period" endorsement (coverage option). The "Extended Report Period" coverage shall commence to the degree that continuous Professional Liability coverage has not been kept in force from the inception of the contracted Project and three (3) years thereafter. Subcontractor agrees that coverage thereunder will not be cancelled or not renewed until at least thirty (30) days' prior written notice has been given to PEPPER.

H. AVIATION INSURANCE.

1. If either of the following aviation options (H2 or H3, below) are applicable for this Project, Subcontractor shall request in writing and obtain PEPPER's written approval for proposed aviation events. With such request, Subcontractor shall include a detailed description of the proposed event, identifying specific dates, times, and proof of pilot licensing, as described below. If approved, Subcontractor shall provide evidence of required liability coverage, as identified below in H2 or H3, as applicable.
   To the extent that **Subcontractor** shall provide aviation services, it is required to:
   a. provide prior written notice to PEPPER that Subcontractor shall provide such aviation services ("Sub Notice");
   b. provide such Sub Notice to PEPPER at least ten (10) days prior to the scheduled flight;
   c. obtain approval for aviation events and provide written evidence of the Subcontractor's required insurance coverage, as identified below at H2 or H3, as applicable, including Owner, PEPPER, and others per the Owner Agreement as an **Additional Insured** on a primary and non-contributory basis for bodily injury or property damage with respect to the ownership, maintenance, or use of the aircraft and provide a Waiver of Subrogation in favor of the parties as set forth in Article J, below;
   d. provide to PEPPER proof of Subcontractor's FAA pilot license, with Commercial Helicopter Rating, or FAA 107 Commercial UAS License, as applicable;
   e. provide written evidence of Non-Owned Aviation liability coverage to the same extent as required by H2 or H3; and
   f. advise PEPPER's Project Manager and Corporate Risk Management of the financial risk exposures involved at least ten (10) days prior to the scheduled flight.

   To the extent that **Subcontractor's lower-tier subcontractor** shall provide aviation services, **Subcontractor** is required to:
   g. provide prior written notice to PEPPER that a Sub-Subcontractor shall provide such aviation services ("Sub-Sub Notice");
   h. provide such Sub-Sub Notice to PEPPER at least ten (10) days prior to the scheduled flight;
   i. notify Sub-Subcontractor, in writing, that all terms of this Article H are applicable to Sub-Subcontractor;
   j. obtain approval for aviation events and provide written evidence of the Sub-Subcontractor's required insurance coverage, as identified below at H2 or H3, as applicable, including Owner, PEPPER, and others per the Owner Agreement as **Additional Insureds** on a primary and non-contributory basis for bodily injury or property damage with respect to the ownership, maintenance, or use of the aircraft and provide a Waiver of Subrogation in favor of the parties as set forth in Article J, below;
   k. provide to PEPPER proof of Sub-Subcontractor's FAA pilot license, with Commercial Helicopter Rating, or FAA 107 Commercial UAS License, as applicable;

l. provide written evidence of its own **and** Sub-Subcontractor's Non-Owned Aviation liability coverage to the same extent as required by H2 or H3; and
m. advise PEPPER's Project Manager and Director of Corporate Risk Management of the financial risk exposures involved at least ten (10) days prior to the scheduled flight.

2. Commercial Aviation (Manned Fixed and Rotor Wing Aircraft) Liability Insurance Coverage: Should Subcontractor's or Sub-Subcontractor's Work include the approved use of any owned, leased, chartered, or hired aircraft of any type on the Project, minimum limits in an amount not less than **$10,000,000** per occurrence, including Passenger Liability, shall apply. Cargo/Sling coverage with limits of **$250,000** per load shall apply. PEPPER reserves the right to determine and require higher limits of liability based on jobsite exposure.

3. Commercial Aviation Liability (Unmanned Aircraft System or Aerial Drones ("UAS")) Insurance Coverage: Should Subcontractor's or Sub-Subcontractor's Work include the approved use of any owned, leased, borrowed, or hired UAS on the Project, minimum limits of liability of **$2,000,000** each occurrence shall apply.

4. Coverage in Sections H2 and H3, above, shall include:
   a. Bodily Injury, Property Damage, Contractual Liability, and Hired and Non-Owned Aircraft Liability. Coverage under this policy shall also be extended to the authorized pilot in command of the aircraft when performing on behalf of the Named Insureds. NOTE: Approved usage of all drones (not to exceed 40 pounds in total unit weight) shall be strictly limited to aerial photography and survey work; and
   b. any aircraft, equipment, or property used in the aviation event shall:
      i. be specifically scheduled on the aircraft liability insurance policy; and
      ii. carry hull and physical damage coverage for the replacement cost value of the aircraft.

5. With regard to both H2 and H3, above, the Subcontractor and any Sub-Subcontractor shall agree that:
   a. if the pilot for such aviation event has not previously flown on a PEPPER project, and has neither been interviewed nor approved by PEPPER to fly, PEPPER and the Subcontractor (and Sub-Subcontractor, if involved) shall timely arrange for the pilot to participate in an interview with a PEPPER drone pilot prior to the first scheduled flight, and the Subcontractor, Sub-Subcontractor and pilot shall all fully cooperate; and
   b. PEPPER reserves the right to decline the drone flight request based on the results of the interview conducted by PEPPER; such decision to decline the flight request shall be in PEPPER's sole discretion and may be based on factors including, but not limited to, the pilot's demonstrated incompetence, lack of experience, or failure to meet PEPPER's standards and requirements.

I. NETWORK SECURITY AND PRIVACY PROTECTION LIABILITY coverage ("Cyber Liability") is required of all Subcontractors and sub-subcontractors as determined by PEPPER, in circumstances where physical or wireless connection will be made to any PEPPER network (including a Guest internet connection) or Owner's Network at the site of the Project. Such networks include, without limitation, Building Automation, Computer Maintenance Management, HVAC, MEP, Building Security/Access Controls, Fire Protections/Alarm, and Telecommunication/Data Management systems. The Subcontractor shall provide evidence of Cyber Liability with limits of not less than **$2,000,000** per occurrence and **$2,000,000** annual aggregate. Coverage shall be sufficiently broad to respond to the cyber and network liability exposure resulting from or arising out of Subcontractor's performance of its duties and obligations under this Subcontract Agreement, and shall provide coverage for loss occurrences which include, but are not limited to, claims involving invasion of privacy violations, information theft, damage to or destruction of electronic information, release of private information, alteration of electronic information, extortion, network security, installation of malware/ransomware, loss of network use, and infringement of intellectual property (including infringement of copyright, trademark, and trade dress). The policy shall provide coverage sufficient to defend and indemnify the **Additional Insureds** and shall also provide coverage for breach response costs, regulatory fines and penalties, and credit monitoring expenses.

J. ADDITIONAL INSURED: To the fullest extent of coverage allowed under applicable law, the following entities shall be included as Additional Insureds under the General Liability, Business/Commercial Automobile Liability, Umbrella/Excess Liability, and Pollution Liability (where applicable).The Subcontractor's CGL and Umbrella Liability policies must include the parties listed in **Exhibit C – Non-CCIP** as **Additional Insureds**, on an ISO **Additional Insured** Endorsement (CG 2010 and CG 2037, Edition #07 04 or older, or equivalent) covering Ongoing and Completed Operations. Subcontractor's insurance will be primary and non-contributory to any insurance carried by any of the **Additional Insured**. Subcontractor's required insurance shall apply separately to each **Additional Insured**. Any other insurance or self-insurance maintained by PEPPER or Owner shall be excess of, and non-contributory with, the coverage afforded by Subcontractor's CGL and Umbrella Liability insurance.

K. A Certificate of Insurance on an ACORD form, and the **Additional Insured** Endorsement (including a waiver of subrogation), must be delivered to the PEPPER Project Manager of record and PROVIDED TO THE PEPPER JOBSITE FIELD SUPERINTENDENT ***PRIOR TO THE COMMENCEMENT OF ANY WORK***. The Subcontractor shall notify PEPPER by email within thirty (30) days if such Certificate is to be altered, cancelled or allowed to expire.

L. Equivalent insurance coverage must be obtained from each sub-subcontractor or supplier, if any, before permitting them on the Project site. In the event Subcontractor fails to obtain such coverage from its lower tiers, protection of such parties shall be included within Subcontractor's insurance policies.

M. PEPPER may furnish, erect or provide equipment, appurtenances and devices, motorized or otherwise, for its use to complete its Contract with the Owner. Subcontractor may use such items upon PEPPER's prior written authorization. In the event of any such Subcontractor use, the Subcontractor agrees to insure against claims of injury or damage caused by such items while in Subcontractor's care, custody or control by naming PEPPER as an insured party. Liability limits shall be the same as in Section C, above. Physical Damage insurance against damage to the items themselves shall be on a "Replacement Cost" basis.

N. Subcontractor will be responsible for any deductible or self-insured retention under its insurance policies.

EXHIBIT C – Non-CCIP

O. It is understood and agreed that PEPPER shall withhold payments to the Subcontractor until a properly executed Certificate of Insurance and endorsement providing insurance as required herein, accompanied by a signed Subcontract Agreement, are received by PEPPER. The failure of PEPPER to withhold such payments or obtain the required Certificate or endorsement shall not be deemed to be a waiver of Subcontractor's obligation to provide the insurance required under the Subcontract Agreement.

P. Subcontractor hereby waives any rights of subrogation against PEPPER, the Owner, the Architect, and any other **Additional Insureds** as required by this Subcontract, the Owner Agreement or the Invitation to Bid. If insurance policies specified within this **Exhibit C – Non-CCIP** require an endorsement to provide for continued coverage where there is a waiver of subrogation, the Subcontractor will cause them to be so endorsed with an **ISO Endorsement CG20 01** or equivalent. This waiver shall apply to all first-party Property, Equipment, Vehicle, Business/Commercial Automobile Liability and Workers' Compensation claims (unless prohibited under applicable state statutes), and all third-party liability claims.

Q. Provided the minimum required primary limits under the Commercial General Liability are provided as stated in Section C., above, CGL, Business/Commercial Auto Liability, and Employer's Liability policies can be obtained by any combination of primary and excess coverage.

R. Any self-insured retention on any of the coverages required above must be clearly disclosed on the Subcontractor's Certificate of Insurance and are subject to PEPPER's approval. PEPPER reserves the right to require a proper form of collateral for any self-insured retention.

S. Upon PEPPER's written request, Subcontractor shall provide to PEPPER copies of all of its insurance policies, including all policy endorsements, as required herein.

T. Failure of Subcontractor to comply with all insurance requirements set forth in this **Exhibit C** will be deemed a material breach of Subcontractor's obligations under the Subcontract Agreement.

U. Subcontractor-provided policy terms, limits, and coverages shall equal or exceed any requirements specified in the Contract Documents or required by law, and in no event shall they be less than required herein. If Subcontractor maintains insurance policies with limits greater or coverage broader than the limits and coverage stated above, Subcontractor agrees that such higher limits and broader coverage shall be deemed to be the minimum limits and coverage required under this Subcontract. Subcontractor further agrees that the higher limits and broader coverage shall be available to the Additional Insureds on a primary and non-contributory basis.

V. Certificates of Insurance shall show all limits of liability in U.S. dollars.

SAMPLE CERTIFICATE OF LIABILITY INSURANCE

Pepper Construction
Tomorrow Transformed

CERTIFICATE OF LIABILITY INSURANCE

DATE (MM/DD/YYYY): 10/26/2023

THIS CERTIFICATE IS ISSUED AS A MATTER OF INFORMATION ONLY AND CONFERS NO RIGHTS UPON THE CERTIFICATE HOLDER. THIS CERTIFICATE DOES NOT AFFIRMATIVELY OR NEGATIVELY AMEND, EXTEND OR ALTER THE COVERAGE AFFORDED BY THE POLICIES BELOW. THIS CERTIFICATE OF INSURANCE DOES NOT CONSTITUTE A CONTRACT BETWEEN THE ISSUING INSURER(S), AUTHORIZED REPRESENTATIVE OR PRODUCER, AND THE CERTIFICATE HOLDER.

IMPORTANT: If the certificate holder is an ADDITIONAL INSURED, the policy(ies) must have ADDITIONAL INSURED provisions or be endorsed. If SUBROGATION IS WAIVED, subject to the terms and conditions of the policy, certain policies may require an endorsement. A statement on this certificate does not confer rights to the certificate holder in lieu of such endorsement(s).

PRODUCER	CONTACT NAME:
Insurance Company information	PHONE (A/C, No, Ext): / FAX (A/C, No):
	E-MAIL ADDRESS:
	INSURER(S) AFFORDING COVERAGE / NAIC #
	INSURER A : <SELECT>
INSURED	INSURER B :
Company Name and Address	INSURER C :
	INSURER D :
	INSURER E :
	INSURER F :

COVERAGES **CERTIFICATE NUMBER:** **REVISION NUMBER:**

THIS IS TO CERTIFY THAT THE POLICIES OF INSURANCE LISTED BELOW HAVE BEEN ISSUED TO THE INSURED NAMED ABOVE FOR THE POLICY PERIOD INDICATED. NOTWITHSTANDING ANY REQUIREMENT, TERM OR CONDITION OF ANY CONTRACT OR OTHER DOCUMENT WITH RESPECT TO WHICH THIS CERTIFICATE MAY BE ISSUED OR MAY PERTAIN, THE INSURANCE AFFORDED BY THE POLICIES DESCRIBED HEREIN IS SUBJECT TO ALL THE TERMS, EXCLUSIONS AND CONDITIONS OF SUCH POLICIES. LIMITS SHOWN MAY HAVE BEEN REDUCED BY PAID CLAIMS.

INSR LTR	TYPE OF INSURANCE	ADDL INSD	SUBR WVD	POLICY NUMBER	POLICY EFF (MM/DD/YYYY)	POLICY EXP (MM/DD/YYYY)	LIMITS	
A	[X] COMMERCIAL GENERAL LIABILITY [ ] CLAIMS-MADE [X] OCCUR NO XCU EXCLUSION GEN'L AGGREGATE LIMIT APPLIES PER: [ ] POLICY [X] PRO-JECT [ ] LOC OTHER:	X	X				EACH OCCURRENCE	$ 1000000-2MM
							DAMAGE TO RENTED PREMISES (Ea occurrence)	$ MAJOR TRADE
							MED EXP (Any one person)	$
							PERSONAL & ADV INJURY	$
							GENERAL AGGREGATE	$
							PRODUCTS - COMP/OP AGG	$
								$
	AUTOMOBILE LIABILITY [X] ANY AUTO OWNED AUTOS ONLY / SCHEDULED AUTOS HIRED AUTOS ONLY / NON-OWNED AUTOS ONLY	X	X				COMBINED SINGLE LIMIT (Ea accident)	$ 1000000
							BODILY INJURY (Per person)	$
							BODILY INJURY (Per accident)	$
							PROPERTY DAMAGE (Per accident)	$
								$
	[X] UMBRELLA LIAB [ ] OCCUR EXCESS LIAB [ ] CLAIMS-MADE DED RETENTION $	X	X				EACH OCCURRENCE	$ 1000000-5MM
							AGGREGATE	$ MAJOR TRADE
								$
	WORKERS COMPENSATION AND EMPLOYERS' LIABILITY ANYPROPRIETOR/PARTNER/EXECUTIVE OFFICER/MEMBER EXCLUDED? Y / N [N] (Mandatory in NH) If yes, describe under DESCRIPTION OF OPERATIONS below		N / A				PER STATUTE / OTH-ER	
							E.L. EACH ACCIDENT	$ 1000000
							E.L. DISEASE - EA EMPLOYEE	$
							E.L. DISEASE - POLICY LIMIT	$
	POLLUTION LIABILITY [+]	X	X					1000000
	PROFESSIONAL LIABILITY [+]							2000000
	CYBER LIABILITY [+]							2000000

In description of operations note: Microbial matter, silica, mold, bacteria and fungi coverage is included OR provide coverage endorsement

Required for Consulting Services Agreement or if your contract includes a Design Build Rider Pepper Construction of Indiana LLC must be included as an additional insured

Required if subcontractor or subsequent tiers are connecting to Pepper or Owner's networks

SAMPLE CERTIFICATE

DESCRIPTION OF OPERATIONS / LOCATIONS / VEHICLES (ACORD 101, Additional Remarks Schedule, may be attached if more space is required)

If submitting "Job Specific" COI include: RE: Project Number, Project Name, List all included/additional insureds from Exhibit C. For "Blanket" COI include: RE: All work performed by (insert subcontractor name) for all Pepper Construction Company of Indiana, LLC job sites. Additional insureds include Pepper Construction of Indiana, LLC and all others identified on written contract/agreement. NOTE: Ohio subcontractors must submit current Bureau of Worker's Comp Certificate. Aviation insurance, where applicable, must be reviewed by Pepper's legal department on a case by case basis. Completed and ongoing operations endorsements must be submitted. Waivers of subrogation forms for all relevant policies must be submitted. Riggers Liability, where applicable, must be included. Refer to Consulting Services Agreement/PO/Subcontract Exhibit C for detailed insurance requirements.

CERTIFICATE HOLDER	CANCELLATION
Pepper Construction Company Of Indiana 1850 W 15th St. Indianapolis, IN 46202	SHOULD ANY OF THE ABOVE DESCRIBED POLICIES BE CANCELLED BEFORE THE EXPIRATION DATE THEREOF, NOTICE WILL BE DELIVERED IN ACCORDANCE WITH THE POLICY PROVISIONS.
	AUTHORIZED REPRESENTATIVE BROKER AGENT NAME/SIGNATURE NOT REQUIRED

© 1988-2015 ACORD CORPORATION. All rights reserved.

Endorsement dates/versions can be: 10/01, 07/04 or 04/13

POLICY NUMBER: *POLICY NUMBER MUST BE ENTERED HERE AND MUST MATCH THE POLICY NUMBER ON THE CERTIFICATE.*

COMMERCIAL GENERAL LIABILITY
CG 20 10 10 01

THIS ENDORSEMENT CHANGES THE POLICY. PLEASE READ IT CAREFULLY.

ADDITIONAL INSURED – OWNERS, LESSEES OR CONTRACTORS – SCHEDULED PERSON OR ORGANIZATION

This endorsement modifies insurance provided under the following:

COMMERCIAL GENERAL LIABILITY COVERAGE PART

SCHEDULE

Name of Person or Organization:

ALL WORK PERFORMED BY (SUBCONTRACTOR'S NAME) FOR PEPPER CONSTRUCTION COMPANY OF INDIANA, LLC ON ALL PEPPER CONSTRUCTION COMPANY OF INDIANA, LLC JOBSITES.

(If no entry appears above, information required to complete this endorsement will be shown in the Declarations as applicable to this endorsement.)

A. **Section II – Who Is An Insured** is amended to include as an insured the person or organization shown in the Schedule, but only with respect to liability arising out of your ongoing operations performed for that insured.

B. With respect to the insurance afforded to these additional insureds, the following exclusion is added:

2. Exclusions

This insurance does not apply to "bodily injury" or "property damage" occurring after:

(1) All work, including materials, parts or equipment furnished in connection with such work, on the project (other than service, maintenance or repairs) to be performed by or on behalf of the additional insured(s) at the site of the covered operations has been completed; or

(2) That portion of "your work" out of which the injury or damage arises has been put to its intended use by any person or organization other than another contractor or subcontractor engaged in performing operations for a principal as a part of the same project.

© ISO Properties, Inc., 2000

Endorsement dates/versions can be: 10/01, 07/04 or 04/13

POLICY NUMBER: *POLICY NUMBER MUST BE ENTERED HERE AND MUST MATCH THE POLICY NUMBER ON THE CERTIFICATE.*

COMMERCIAL GENERAL LIABILITY
CG 20 37 10 01

THIS ENDORSEMENT CHANGES THE POLICY. PLEASE READ IT CAREFULLY.

ADDITIONAL INSURED – OWNERS, LESSEES OR CONTRACTORS – COMPLETED OPERATIONS

This endorsement modifies insurance provided under the following:

COMMERCIAL GENERAL LIABILITY COVERAGE PART

SCHEDULE

Name of Person or Organization: *ALL WORK PERFORMED BY (SUBCONTRACTOR'S NAME) FOR PEPPER CONSTRUCTION COMPANY OF INDIANA, LLC ON ALL PEPPER CONSTRUCTION COMPANY OF INDIANA, LLC JOBSITES.*
Location And Description of Completed Operations: *All Pepper Construction Company of Indiana, LLC jobsites.*
Additional Premium:

(If no entry appears above, information required to complete this endorsement will be shown in the Declarations as applicable to this endorsement.)

Section II – Who Is An Insured is amended to include as an insured the person or organization shown in the Schedule, but only with respect to liability arising out of "your work" at the location designated and described in the schedule of this endorsement performed for that insured and included in the "products-completed operations hazard".

© ISO Properties, Inc., 2000

PEPPER PREQUALIFICATION INSTRUCTIONS

Pepper Construction
Tomorrow Transformed

Prequalification Instructions: New Trade Partner Applicant

TABLE OF CONTENTS

1. General Instructions 2
2. How to Navigate to Pepper's Self-Service Portal 2
3. Self-Service Portal Subcontractor Prequalification Instructions 3
   - Page 1 of the Application 3
   - Page 2 of the Application 4
   - Page 3 of the Application 4
   - Page 4 of the Application 5
   - Page 5 of the Application 7
   - Page 6 of the Application 7
   - Page 7 of the Application 8

1. GENERAL INSTRUCTIONS

The purpose of this document is to give general instructions on how to apply for prequalification for new trade partners (New Applicants) at Pepper Construction. To apply for prequalification, use the Prequalification Self-Service Portal and fill out the application. Upon submitting the application, you will not be able to go back to the application. If there is any information missing, Pepper's prequalification specialist will contact you via email. Any questions about the process or steps should be directed to prequal@pepperconstruction.com. **This application works in any browser- Google Chrome, Microsoft Edge or Firefox.**

2. HOW TO NAVIGATE TO THE SELF-SERVICE PORTAL

1. Go to Pepper's website (www.pepperconstruction.com), and click on Prequalification at the top of the page.

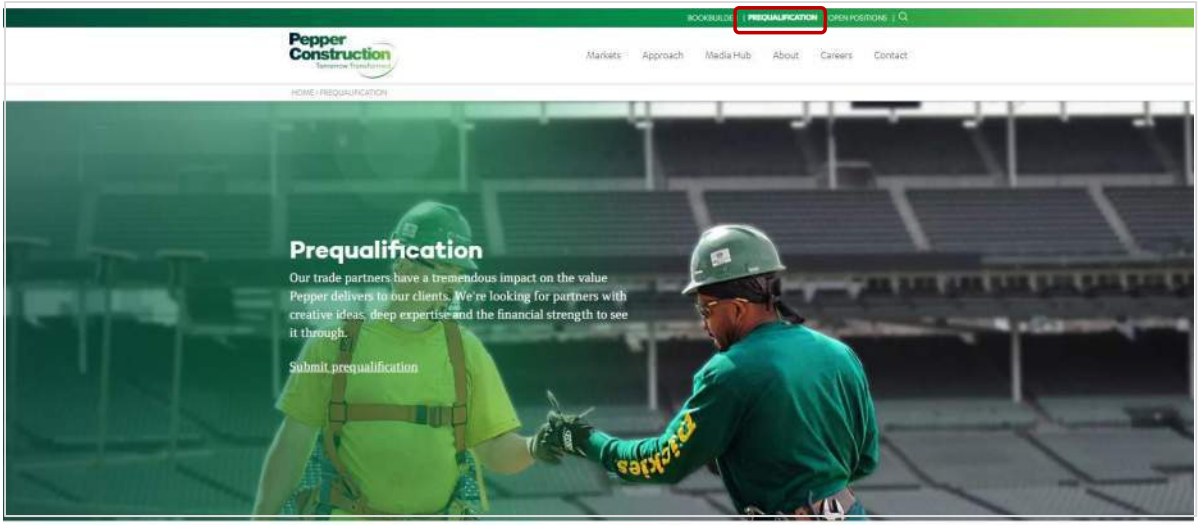

2. You are now connected to the Pepper's Trade Partner Prequalification Self Service page.

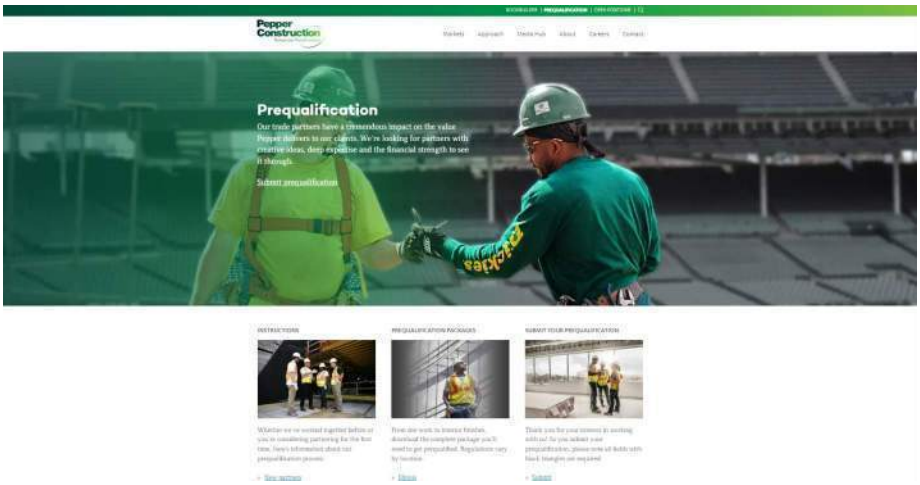

3. SELF-SERVICE PORTAL SUBCONTRACTOR PREQUALIFICATION INSTRUCTIONS

Enter your Federal Tax ID (FEIN#), using XX-XXXXXXX format. It is important that this number is entered accurately, so please double check prior to clicking OK

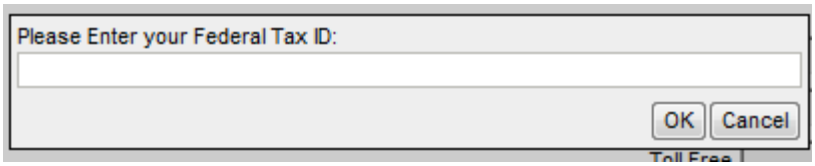

Enter a password and be sure to write it down and keep it in a safe place. If the application will not be completed all at once you will need this password to complete the application at a later time. Note that the password is case sensitive.

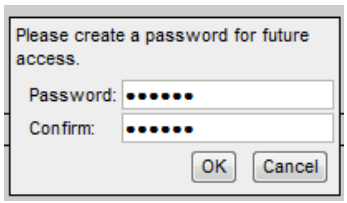

If you saved your application initially and forgot your password when trying to login again, please contact prequal@pepperconstruction.com. The application consists of 6 pages. Page 7 summarizes the information entered and allows you to update it or submit.

Page 1 of the application

Enter all the required fields that are indicated by a black triangle.

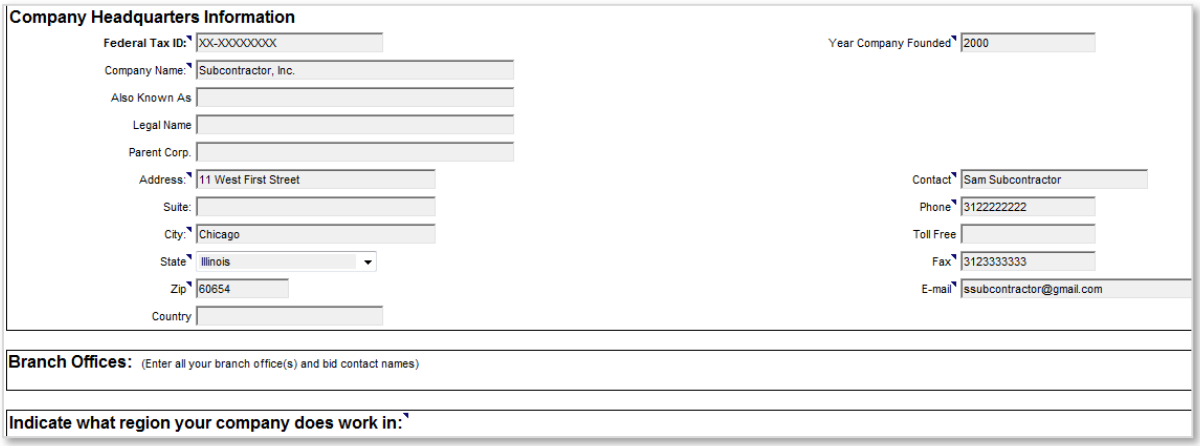

- Complete *Company Headquarters Information* section.
- If your company has multiple branch offices, please click [**Add Row**] to complete information for each branch office.
- Check the box next to all Pepper offices that you plan on working with in the future.
- Click [**Next**] to move on to the next page.

Page 2 of the application

Enter all required general information (indicated by the black triangle).

1. Complete the *License Information* section. Click on **[Add Row]** for each additional license.
2. If your firm is signatory to any unions, check the box next to *Yes* and complete the *Union Affiliations* section. If you have multiple Union Affiliations click on **[Add Row]** to select additional unions. Note that you can type in the Union Affiliations field to add a new record if your union is not listed. If your firm is not signatory to any unions, check the box next to *No* and move on to the next section.
3. In the *Trade Information* section, select from the drop down box all trades that apply to your firm. To select additional trades click on **[Add Row]**.
4. If your firm has minority business status, check the appropriate box(es) and then select the certifying agency. Click **[Add Row]** to select additional certifying agencies. Note that you can type in the *Certifying Agency* field to add a new record if your agency is not listed.
5. Click **[Next]** to move on to the next page.

The application may be saved by clicking the **[Save Draft]** option at the bottom of the page. The **[Save Draft]** option allows the applicant to save and finish the application at a later time using the FEIN# and password to log back into the system. Click **[Next]** button to proceed with the application.

Page 3 of the application

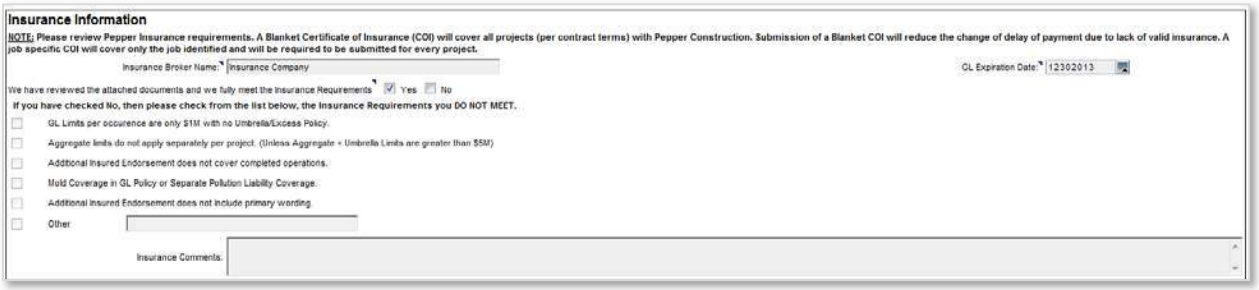

Safety Information (OSHA Form 300A Must Be Attached)

Is your Company part of an OSHA partnership? ☑ Yes ☐ No

Does your company conduct weekly, documented safety audits? ☑ Yes ☐ No

Do your trades people begin each day with safety meeting? ☑ Yes ☐ No

Does your company have a substance abuse policy? ☑ Yes ☐ No

A copy of your companys safety manual, hazard communication program and material safety data sheets are required to be uploaded as attachments in order to process your application.

Year	Citations	EMR	RIR	LTIR	FWH	DART	Fatalities
2013	0	0	0	0	0	0	0
2012	0	0	0	0	0	0	0
2011	0	0	0	0	0	0	0

Add Row

Citations - Please enter number of OSHA Citations received during that year (citations, not violations)
EMR - Experience Modification Rate. Your Workers Comp carrier should have this information
RIR - Recordable Incidents - Add columns I & J from the OSHA 300A form.
LTIR - Lost Time Incidents - Column H from the OSHA 300A form
FHW - Total hours worked by all employees - located on right hand side of OSHA 300A form
DART - DART Cases. Total of columns H and I from the OSHA 300A
Fatalities - Column G from OSHA 300A form

1. Before answering any questions, please **review Pepper's Safety Regulations and Insurance Requirements.**
2. Complete the *Insurance Information* section.
   a. Note insurance is job specific; be sure you meet all the requirements per your contract.
3. Complete the *Safety Information* section.
4. You will need to attach your OSHA Form 300A Summary of Work-Related Injuries and Illnesses filed with the US Department of Labor for the past 3 calendar years on the last page of this application.
5. Use the following link to search for your company's OSHA citations for the last 3 years. **http://www.osha.gov/pls/imis/establishment.html**
6. Click the **[Next]** button to proceed with the application or click the **[Save Draft]** button to save the application.

Page 4 of the application

Surety Information

Is your Company Bondable? ☑ Yes ☐ No

Surety Company: Surety Company

Broker Name: Broker Name

Phone: 3124444444

Single Project Bonding Capacity: 1,000,000.00

Aggregate Project Bonding Capacity: 2,000,000.00

Current amount under bond today: 10,000,000.00

$ 0 - $ 100 K	0.00%
$ 100 K - $ 500 K	0.00%
$ 500 K - $ 1 M	0.00%
$ 1 M - $ 2 M	0.00%
$ 2 M - $ 5 M	0.00%

Financial Information

Financial Year Ending: 2013 Add Year

Legal Entity Type: Sole Proprietor with SSN

Year Company Founded: 1980

Fiscal Year End Date: Jan 1

Subsidiary Names: 1. 2. 3. 4. 5.

Parent Organization:

Do you have D&B Number? ☐ Yes ☑ No Number:

D&B Paydex No:

Previous Company Names: 1. 2. 3. 4. 5.

Has Your Firm Ever Filed Bankruptcy? ☐ Yes ☑ No

If Yes, explain:

Accountant:

Financial Format:

Please provide your financial information for the past 2 years. Please upload a copy of your current financial statement at the last section of this questionnaire and select the financial statement box.

Income Statements

Net Sales	.00
Cost Of Sales	.00
Gross Profit Margin	.00
Selling, General, Administrative	.00
Depreciation and Amortization	.00
Other Operating Expenses	.00
Operating Income	.00
Interest Expense	.00
Interest Income	.00
Other Nonoperating Expenses	.00
Earnings Before Taxes	.00
Income Taxes	.00
Net Income	.00

Balance Sheet

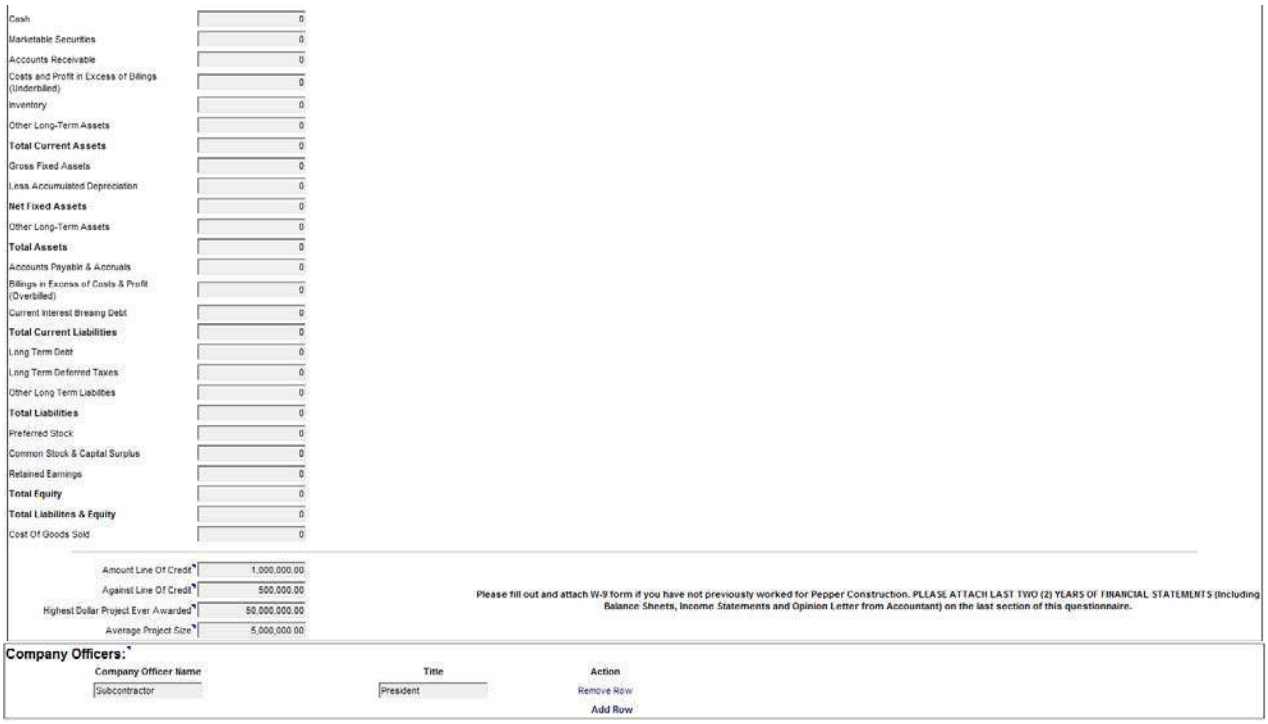

Cash	0
Marketable Securities	0
Accounts Receivable	0
Costs and Profit in Excess of Billings (Underbilled)	0
Inventory	0
Other Long-Term Assets	0
Total Current Assets	0
Gross Fixed Assets	0
Less Accumulated Depreciation	0
Net Fixed Assets	0
Other Long-Term Assets	0
Total Assets	0
Accounts Payable & Accruals	0
Billings in Excess of Costs & Profit (Overbilled)	0
Current Interest Bearing Debt	0
Total Current Liabilities	0
Long Term Debt	0
Long Term Deferred Taxes	0
Other Long Term Liabilities	0
Total Liabilities	0
Preferred Stock	0
Common Stock & Capital Surplus	0
Retained Earnings	0
Total Equity	0
Total Liabilities & Equity	0
Cost Of Goods Sold	0

Amount Line Of Credit*	1,000,000.00
Against Line Of Credit*	500,000.00
Highest Dollar Project Ever Awarded*	50,000,000.00
Average Project Size*	5,000,000.00

Please fill out and attach W-9 form if you have not previously worked for Pepper Construction. PLEASE ATTACH LAST TWO (2) YEARS OF FINANCIAL STATEMENTS (Including Balance Sheets, Income Statements and Opinion Letter from Accountant) on the last section of this questionnaire.

Company Officers:*

Company Officer Name	Title	Action
Subcontractor	President	Remove Row
		Add Row

1. Complete the *Surety Information* section. If you check the box next to Yes, all other fields must be completed. If you check the box next to No, move on to the next section.
    a. Note that if you check the box next to Yes you will need to attach your Letter of Bondability from Surety stating total and per project bonding capacity.
2. Complete the *Financial Information* section.
    a. Note that you will need to attach a copy of your financial statements for the last 2 years at the last section of the questionnaire and select the *Financial Statement* box to ensure their confidentiality. This should include your balance sheets, income statements, and opinion letter (accountant's summary).
    b. *Accountant* refers to the name of the person or firm who prepares your financial statements.
    c. *Financial Format* refers to whether your financial statements are audited, reviewed, or compiled.
    d. Financial information must be completed for your most recent set of financial statements.
3. You will need to fill out and attach a W-9 regardless of whether you have worked with Pepper in the past (to find a sample, please refer to section 4 of this document).
4. Complete the *Company Officers* section.
5. Click the **[Next]** button to proceed with the application or click the **[Save Draft]** button to save the application.

Page 5 of the application

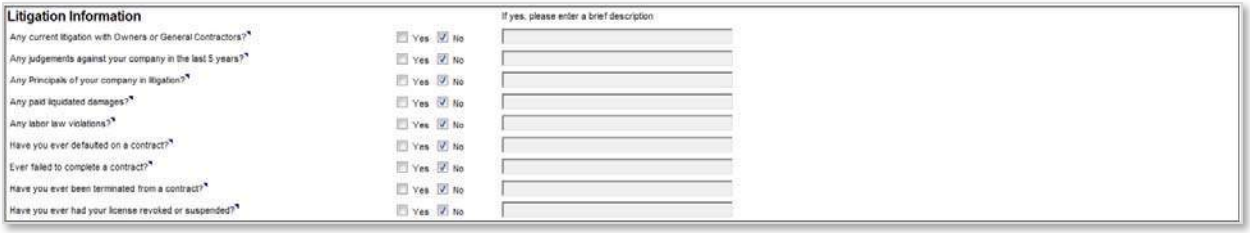

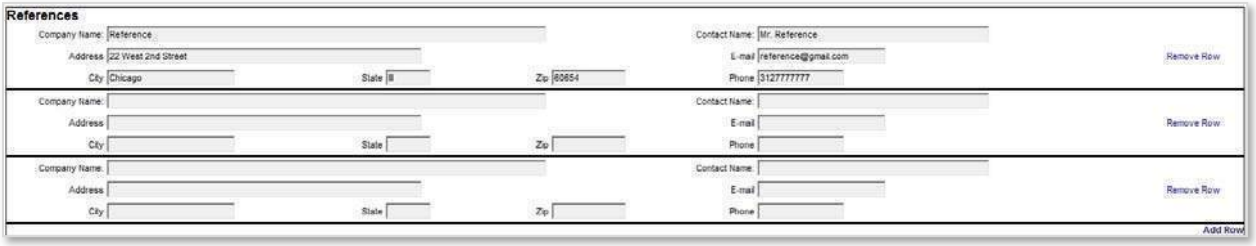

1. Complete the *Financial Information* section.
2. Complete the *Litigation Information* section.
3. Complete the *References* section. If you would like to provide more than 3 references you can click on **[Add Row]**.
4. Click the **[Next]** button to proceed with the application or click the **[Save Draft]** button to save the application.

Page 6 of the application

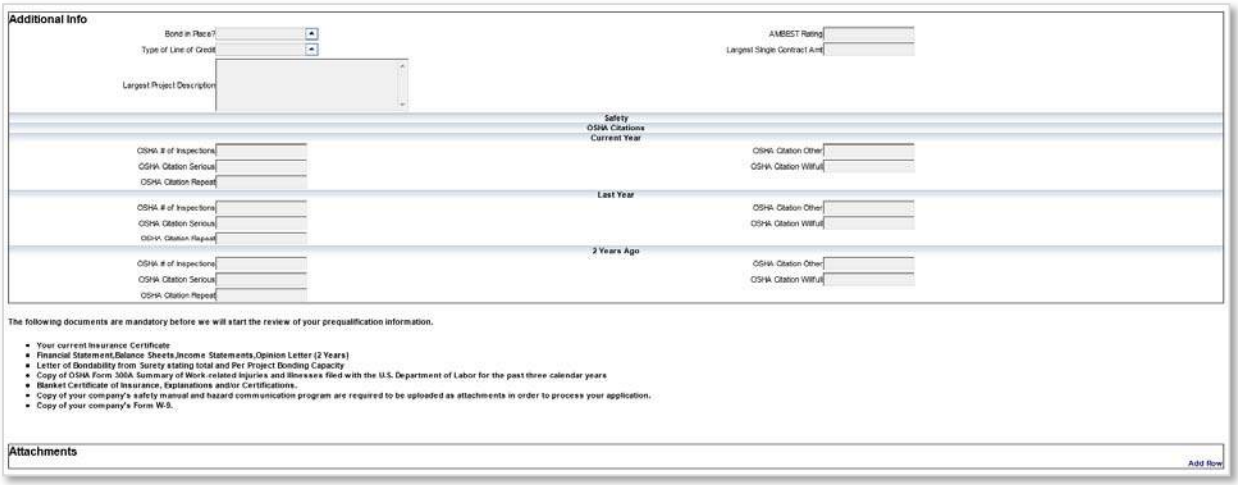

1. Complete the *Additional Info* Section.
    a. *Bond in Place?* If your company is signatory to a union, please select Y or N as to whether you have a bond in place securing your payment of wages and fund contributions as required by your labor union agreement. If your company is not signatory to a union, you can skip this question.
    b. *Type of Line of Credit*. Select the appropriate response from the dropdown list.
    c. *Largest Project Description*. Enter a description of your largest project.
    d. *AMBEST Rating*. Enter the AMBEST Rating of your bonding company.
    e. Largest Single Contract Amt. Enter the dollar amount of your largest contract.
2. ATTACHMENTS-Click **[Add Row]** to add attachments. Enter a description for each attachment. Once you upload the file will disappear but the file name should appear on your screen. Remember to click the box next to *Financial Attachment* when attaching your financial statements. This will ensure their confidentiality. The following items should be attached:
    a. Current Insurance Certificate
    b. Complete Financial Statements including Balance Sheet, Income Statement, and Opinion Letters for the last **2** years. **NOTE: Financial Statements are uploaded to a secure site to which only Pepper's Prequalification administrator has access.**
    c. Letter of Bondability from surety stating total and per project bonding capacity
    d. OSHA Form 300A Summary of work-related injuries and illnesses for the last **3** calendar years.
    e. Blanket Certificate of Insurance, Expirations and/or Certifications
    f. Copy of your company's Safety Manual and Hazard Communication Program
    g. Copy of your company's Form W-9.
3. Click the **[Next]** button to proceed with the application.

Page 7 of the application

1. A summary of all information entered will be provided. Please review this for accuracy. By clicking the **[Previous]** button shown either at the top or bottom of the page allows the user to go back to the desired section and update the previously entered information.
2. **PLEASE PRINT A HARD COPY OF THE APPLICATION TO RETAIN FOR YOUR RECORDS.**

When complete, click the **[Submit]** button to submit to Pepper for processing. Once submitted, you can no longer access the form.

Pepper Construction
Tomorrow Transformed

Prequalification Instructions: Existing Trade Partners

1. GENERAL INSTRUCTIONS

The purpose of this document is to give general instructions on how to renew the trade partner prequalification compliance for Existing Subcontractors whose compliance is set to expire. **This application works in any browser- Google Chrome, Microsoft Edge or Firefox.**

If you have any questions about how to fill out the application, please refer to the prequalification instructions for new applicants.

2. TRADE PARTNER PREQUALIFICATION PROCESS OVERVIEW

An existing trade partner, whose compliance is set to expire, should receive an expiration notice from Pepper (email), requesting to renew the compliance. The automatic expiration notification is sent 30 days prior to the compliance expiration date. Upon receiving this email, trade partners should follow the link provided in the email to the prequalification portal, enter your credentials and follow the instructions. Basic information previously submitted will already be filled in. You will also be prompted to submit additional documentation in order to renew the compliance. Should you have any questions, please email prequal@pepperconstruction.com

BELOW IS A SAMPLE OF A RENEWAL NOTICE:

Predefined Subjects Manual Renewal Notification E-Mail Subject

Subject Pepper Construction Prequalification Annual Renewal Notice

Body

Dear Subcontractor / Vendor,

We value our relationship with you and look forward to continuing to work together on future opportunities. Please be advised that your current pre-qualification rating will expire within the next 30 days and must be renewed to be considered for future opportunities.

Use the following link to update your information: <SS_URL>

Enter your tax id number with the dash: xx-xxxxxxx

ENTER THE FOLLOWING PASSWORD: <SS_Password>

It works in any browser - Google Chrome, Microsoft Edge or Firefox.

Pepper maintains a formal and stringent prequalification process for all subcontractors / vendors, as required by our surety company. We require the following documents be updated on an annual basis. Please attach these forms to your prequalification at the time of submission.

- Sample Insurance certificate with all applicable endorsements
- OSHA Form 300A for the past 3 years
- Safety Manual, procedures
- Bonding letter from your surety company stating your company's single project and aggregate bonding capacity
- 3rd party prepared year-end financial statements from your last 2 years
- Current W9

Please note you will NOT be able to update the following fields of the application:

- Company name
- Address
- Phone
- Year company founded
- Email

If you would like to update any of the above fields, please upload your request as an attachment to your application or send an email to prequal@pepperconstruction.com. When asked to "Indicate what region your company does work in," specify the primary Pepper office - Illinois, Indiana, Ohio and Wisconsin.

Should you have any questions or require assistance, please contact the prequalification department at prequal@pepperconstruction.com.

Sincerely,
Prequalification Department

TRADE PARTNER SAFETY HANDBOOK

Pepper Construction
Tomorrow Transformed

TRADE PARTNER SAFETY HANDBOOK

Contents

1. INTRODUCTION 3
2. STATUTORY REQUIREMENTS 3
3. INSURANCE REQUIREMENTS 3
4. SAFETY PRE-QUALIFICATION 3
5. SAFETY PLANNING & PROGRAMS 3
6. COMPETENT PERSON REQUIREMENT 4
7. TRAINING 4
8. SAFETY ORIENTATION 4
9. INSPECTIONS 4
10. CONTRACTOR VIOLATIONS 4
11. EMPLOYEE VIOLATIONS 5
12. ACCIDENT REPORTING 6
13. MEDICAL FACILITIES 7
14. BLOODBORNE PATHOGENS 7
15. CONCRETE/MASONRY CORING & CUTTING 8
16. CONCRETE PUMP TRUCKS 8
17. CONFINED SPACE ENTRY 8
18. CONTRABAND & FIREARMS 8
19. UTILITY AND CRITICAL SYSTEM SHUTDOWN 8
20. CRANES 9
21. NON-CRANE HOISTING 10
22. DRONE USAGE - 10
23. DEMOLITION 10
24. DRUG & ALCOHOL POLICY 10
25. ELECTRICAL 12
26. EXCAVATIONS 14
27. EXCAVATIONS - UNDERGROUND UTILITIES 16

28. FALL PROTECTION 18
29. CONTROLLED DECKING ZONE 22
30. FALLING OBJECTS PREVENTION 23
31. FIRE PROTECTION 23
32. HAZARD COMMUNICATION 26
33. HOUSEKEEPING 26
34. INDOOR AIR QUALITY 27
35. LADDERS - 27
36. MASONRY CONSTRUCTION 28
37. MATERIAL HANDLING 29
38. MOTORIZED EQUIPMENT 29
39. TRANSPORTATION OF PERSONNEL 30
40. PERSONAL PROTECTIVE EQUIPMENT 31
41. POWDER ACTUATED TOOLS 32
42. PUBLIC PROTECTION 33
43. RADIOS 33
44. SCAFFOLDING 33
45. STILTS 35
46. SCISSORS AND AERIAL LIFTS 36
47. SILICA EXPOSURES 36
48. UTILITIES 36
49. UTV (Utility Type/Terrain Vehicles) 37
50. VISITORS 37
51. WELDING AND CUTTING 38
52. PRE-CAST / TILT UP WALL PANEL ERECTION 39

1. **INTRODUCTION** - This handbook has been provided to familiarize all TRADE PARTNERS and their SUPERVISORS with the Pepper Construction Company of Indiana (PEPPER CONSTRUCTION) safety rules, procedures, and guidelines for preventing jobsite accidents and injuries. It is the responsibility of the TRADE PARTNER to provide their Project Managers and Site Supervisors with a copy of this document. TRADE PARTNER is the chosen lexicon for SUBCONTRACTOR. Also, be advised that an officer of your company has read this handbook and agreed with its terms and conditions. This commitment assures your compliance with the safety rules, procedures, and guidelines outlined in this handbook, as well as all applicable Federal, State and Local regulations. This document does not replace, modify, or supersede the rights and obligations of the parties as set forth in the subcontract. The Trade Partner is ultimately responsible for the safety of its personnel and third parties that come in contact with the Trade Partner's operations. This handbook is not intended to replace the Trade Partner's policies or to make Pepper responsible for the subs' operations.

   Items that are **bolded** may exceed OSHA minimum requirements. If OWNER safety requirements apply, the stricter requirement will be followed.

2. **STATUTORY REQUIREMENTS** - Each TRADE PARTNER is expected to be aware of and comply with Federal, State, and Local safety regulations. In addition, each TRADE PARTNER has agreed to hold the Owner and PEPPER CONSTRUCTION harmless for all claims, damages (including legal fees), and/or penalties incurred because of TRADE PARTNER's failure to comply with such regulations.

3. **INSURANCE REQUIREMENTS** - TRADE PARTNERS may not start their work until a valid and acceptable certificate of insurance is on file with PEPPER CONSTRUCTION. This includes a copy being provided to the PEPPER CONSTRUCTION Site Superintendent.

4. **SAFETY PRE-QUALIFICATION** – Each TRADE PARTNER that will have direct employees on the jobsite must be Safety Prequalified by PEPPER CONSTRUCTION. The Safety Prequalification Information online application must be completed and submitted to PEPPER CONSTRUCTION prior to contract award.

5. **SAFETY PLANNING & PROGRAMS**

   5.1. **The TRADE PARTNER must submit a PEPPER CONSTRUCTION approved Project Specific Safety Plan.** Templates are provided by PEPPER CONSTRUCTION. The completed safety plan must be submitted to PEPPER CONSTRUCTION for review and acceptance prior to the Safety Plan Review Meeting and the start of work. The plan shall be updated as site conditions warrant and reflect changes in safety procedures that are necessary to maintain a safe jobsite.

5.2. **Safety Plan Review Meeting – all TRADE PARTNERS are required to attend a Safety Plan Review Meeting that must take place before any work starts.** The PEPPER CONSTRUCTION Superintendent will schedule the meeting. **Required attendees include the TRADE PARTNER full time Site Superintendent/Foreman** and the PEPPER CONSTRUCTION Superintendent. The TRADE PARTNER COMPETENT PERSON must be fully aware of this plan and the procedures necessary to eliminate any hazards.

5.3. **The TRADE PARTNER is required to review the Project Specific Safety Plan with their tradespeople prior to beginning work.**

6. **COMPETENT PERSON REQUIREMENT** - The TRADE PARTNER must designate a Competent Person in writing. It is the competent person's responsibility to initiate and maintain an effective safety process at the jobsite. **Each competent person shall have completed the 30-hour OSHA Construction Safety and Health Training course.**

7. **TRAINING** - Weekly toolbox and **daily Task Hazard Analysis (Job Safety Analysis) meetings are required** of all TRADE PARTNERS. Documentation of these meetings must be submitted to the PEPPER CONSTRUCTION site Superintendent weekly. Project meetings will include Safety as an agenda item and all TRADE PARTNER supervisors are required to attend.

8. **SAFETY ORIENTATION** - **TRADE PARTNERS are required to send trades people who are new to the project to the PEPPER CONSTRUCTION orientation before they begin work at the site.** PEPPER CONSTRUCTION will conduct the orientation meetings.

9. **INSPECTIONS** - TRADE PARTNERS are required to inspect daily the areas in which their employees are working and immediately report any unsatisfactory or unsafe conditions to the PEPPER CONSTRUCTION site Superintendent**. Each TRADE PARTNER will perform, at a minimum, weekly documented inspections of their work.** Documentation of these inspections must be submitted to the PEPPER CONSTRUCTION Site Superintendent weekly.

10. **CONTRACTOR VIOLATIONS** - If unsafe conditions, practices, or procedures are observed, the TRADE PARTNER supervisor will be requested to correct the situation. Failure to adequately correct the condition or refusal to comply or enforce the requirements referenced in this handbook may result in:

    10.1. Removal of involved employees from the jobsite;

    10.2. Removal of all TRADE PARTNER employees from the jobsite;

    10.3. Denial of future bid opportunities with PEPPER CONSTRUCTION.

11. EMPLOYEE VIOLATIONS - This procedure is established to provide for the discipline of employees who violate safety rules. Safety rules are written and enforced to provide for a safe and healthful place of employment.

11.1. All TRADE PARTNER Superintendent's and Foremen are responsible for the enforcement of the safety and health program on PEPPER CONSTRUCTION projects. In order to accomplish this, they must ensure that each employee is properly instructed in the use of safety equipment and safe work practices. PEPPER CONSTRUCTION will monitor the safety performance of TRADE PARTNERS working on the jobsite.

11.2. If violations of the statutory PEPPER CONSTRUCTION requirements and/or the Project Specific Safety Plan are observed, the responsible TRADE PARTNER must initiate the disciplinary policy with their employee. The response to a safety violation should be carefully evaluated based on the nature of the safety violation. It is imperative that the TRADE PARTNER Superintendent or Foreman warn employees when they violate a safety rule and remove any employee who refuses to comply with the safety rules from the PEPPER CONSTRUCTION project.

11.3. When an employee is observed violating a safety rule, the tradesperson's employer, and/or PEPPER CONSTRUCTION shall implement the following steps:

11.3.1. First offense – written warning to employee (all written warnings shall be documented using the TRADE PARTNERS Employee Safety Violation Notice or letterhead);

11.3.2. Second offense – written warning to employee with a phone call and/or letter to TRADE PARTNER office within 24 hours of violation. Employees shall be prohibited from working on PEPPER CONSTRUCTION projects for 2 working days.

11.3.3. Third offense – within any twelve-month period is grounds for immediate removal from the project and prohibition of working on PEPPER CONSTRUCTION projects for one year.

11.4. Serious Intentional Violations are defined as violations that may have potentially severe consequences, or place individual(s) in imminent danger. A serious intentional violation may result in immediate dismissal from the project and termination of the employees' ability to work on other PEPPER CONSTRUCTION projects. Examples of serious intentional violations include:

11.4.1. Smoking in non-designated areas;

11.4.2. Possession of alcohol, firearms, and/or illegal drugs;

11.4.3. Fighting or belligerent behavior;

11.4.4. Tampering with emergency equipment;

11.4.5. Working without a valid shutdown notification, hot work permit, or application of a Lockout/Tagout;

11.4.6. Working without proper fall protection, placing a person in imminent danger;

11.4.7. Entering excavations/trenches without appropriate sloping, shoring, or other protective measures, placing a person in imminent danger;

11.4.8. Entering areas designated and marked as “Do Not Enter”, placing a person in imminent danger;

11.4.9. Operating equipment without valid licensing or training certification;

11.4.10. Not reporting work related injuries and/or damage to PEPPER CONSTRUCTION equipment or property;

11.4.11. Failure to report and/or correct recognized safety hazards;

11.4.12. Repeated or multiple safety violations of the same nature;

11.4.13. Other acts, which indicate a TRADE PARTNER employee’s, disregard toward his/her safety, the safety of others, or neglect of proper care of PEPPER CONSTRUCTION property/equipment.

11.4.14. Falsify what transpired when reporting work place injuries or death.

11.5. TRADE PARTNER Superintendent or Foreman shall review with the employee the details of the safety violation including corrective actions and consequences.

11.6. Copies of the Safety Violation shall be forwarded to the PEPPER CONSTRUCTION Superintendent and Safety Director.

12. ACCIDENT REPORTING - Each TRADE PARTNER will report immediately to the PEPPER CONSTRUCTION site Superintendent, any accident or injury involving Trade Partner employees or the employees of their second-tier Trade Partner(s), damage to property, public or private, general liability or injury to non-employees. Additionally, a copy of each accident report is to be provided to the PEPPER CONSTRUCTION site Superintendent within 24 hours. A written investigation report must be provided within 24 hours of the accident or injury.

13. MEDICAL FACILITIES - First Aid supplies are available in the PEPPER CONSTRUCTION site Superintendent's trailer or job office. Emergency telephone numbers are also posted at this location. The emergency numbers will include a nearby medical facility.

13.1. By law, every TRADE PARTNER must provide a First Aid Kit in their job site office or gang box, provide at least one trained responder certified in First Aid/CPR, and administer care to injured workers.

13.2. TRADE PARTNERS shall provide transportation from the job site to the specified doctor's office or clinic. The employer is responsible for transporting the injured worker to the designated medical facility.

14. BLOODBORNE PATHOGENS

14.1. Exposure Determination - OSHA requires employers to perform an exposure determination in which employees may incur occupational exposure to blood or other potentially infectious materials. This exposure determination is made without regard to the use of personal protective equipment. (Employees are considered exposed even if they wear personal protective equipment). This exposure determination is required to list all job classifications in which the employees may be expected to incur such occupational exposure, regardless of frequency. The employer is also required to list job classifications in which some employees may have exposure if performing certain tasks or procedures.

14.2. Personal Protective Equipment - All personal protective equipment used at this project, for protection of bloodborne pathogens, will be provided without cost to employees by their employer. Personal Protective Equipment (PPE) will be chosen based on the reasonable likelihood of any possible exposure to blood or other infectious materials.

14.3. Hepatitis B Vaccine

14.3.1. All employees who have been identified as having possible exposure to blood or other potentially infectious materials will be offered the Hepatitis B vaccine at no cost to the employee by their employer. The vaccine will be offered within 10 days of initial assignment involving potential exposure. Employees who decline the Hepatitis B vaccine must sign a waiver. Employees who initially decline the vaccine but who later wish to have it will be provided the vaccine at no cost.

14.3.2. Employees who perform first aid only on an emergency basis, he/she will be offered the Hepatitis B vaccine. In the event emergency first aid has been rendered, and responder has possible exposure to blood or other infectious

materials, he/she will be offered the Hepatitis B vaccine at no cost to the employee by their employer. If he/she declines the Hepatitis B vaccine, he/she will sign a waiver.

15. **CONCRETE/MASONRY CORING & CUTTING** – If the TRADE PARTNER scope of work includes core drilling or sawing in concrete slabs and/or concrete/masonry walls, **the TRADE PARTNER is required to use Ground Penetrating Radar or other suitable technology to define areas where it is safe to drill or cut in order to avoid damaging rebar, post-tension cables, electrical conduit or the like.**

16. **CONCRETE PUMP TRUCKS** – The TRADE PARTNER responsible for that equipment on site is the "Controlling Entity" for that activity and must verify that ground conditions are stable and that outrigger bearing pressures can be safely met. The TRADE PARTNER responsible for that work must establish a safe travel path of equipment, outrigger locations and ensure that no hazards such as overhead or underground utilities or vaults or structures exist.

17. **CONFINED SPACE ENTRY** - All employees must be protected from hazards associated with confined space entry. No employee shall be permitted to enter a confined space that has not first been monitored to insure sufficient oxygen levels exist, toxic gas levels are below OSHA Permissible Exposure Limits (PEL), and combustible gases are below the Lower Flammable Limits (LEL). All work with exposure to confined spaces must be competed in accordance with OSHA 1926 Subpart AA.

18. **CONTRABAND & FIREARMS** – The following items shall be considered contraband - stolen property, firearms, weapons, explosives, and any other hazardous substances and are strictly prohibited on any PEPPER CONSTRUCTION jobsite. Persons or employees found to be using or in possession of, or concealing any of the above-unauthorized items will be permanently removed from the jobsite.

19. **UTILITY AND CRITICAL SYSTEM SHUTDOWN** - Utility Shutdowns and Critical System Service must be scheduled 10 calendar days before commencement of the work or as specified by client/project team. This work may result in a curtailment of owner's services and operations must be accomplished at the owners required schedule. The PEPPER CONSTRUCTION Superintendent in conjunction with the owner Project Manager/Facilities representative shall coordinate all shutdown requests.

    All utility or system connections, shut-off, or interruptions must be scheduled with PEPPER CONSTRUCTION before commencement of the work.

    19.1. Valves and other shutdowns shall be located before work begins.

    19.2. Contingency plans shall be developed in the event of critical system interruption.

19.3. All Critical Systems shall be identified before the start of demolition. Lines shall be painted or flagged to indicate their presence.

20. CRANES

20.1. **All operators of mobile, boom truck, lattice boom, telescopic boom (Hydro) and tower cranes, shall maintain a valid certification card issued by the Operating Engineers Certification Program (OECP), the National Commission for the Certification of Crane Operators (NCCCO) or a company program reviewed by an outside auditor.** The certification must be specific to the type of crane being operated. Certifications must be current and in good standing. Certifications must be available for verification by PEPPER CONSTRUCTION at any time while the operator is on site.

20.2. The TRADE PARTNER responsible for crane work on site must verify that ground conditions are stable and outrigger bearing pressures imposed can be safety met. The TRADE PARTNER responsible for that work must establish and plan a travel path for the equipment, determine outrigger locations and ensure that no hazards such as overhead or underground utilities or vaults or structure exist. The TRADE PARTNER must perform these inspections and notify PEPPER CONSTRUCTION prior to any lift or pick taking place.

20.3. Crane appurtenances that exceed 200' above the ground or within 20,000 feet of an airport shall be marked and lighted, unless an exemption is received from the FAA. Contractors erecting the crane must review and complete FAA Form 7460 as required. Notice of Proposed Construction or Alteration (faa.gov)

20.4. Annual inspection is required, and a copy provided to PEPPER CONSTRUCTION upon request.

20.5. Tower Cranes must be inspected by a Third Party Qualified Person after erecting, climbing, jumping, de-jumping and/or dismantling activities. Additionally, a Registered Professional Engineer must verify that the host structure is strong enough to withstand forces imposed on it by braces, anchorages, and supporting floors. A copy of this inspection must be provided to PEPPER CONSTRUCTION upon request.

20.6. All signal persons and riggers must have certified training. Certifications must be current and in good standing. Certifications must be available for verification by PEPPER CONSTRUCTION at any time while the operator is on site.

20.7. Tag lines or guide ropes shall be used to control all loads.

20.8. Equipment operators and truck drivers must not operate closer than recommended minimum clearance distances from overhead or underground electrical wires. If work is required near these utilities, the TRADE PARTNER must consult with the PEPPER CONSTRUCTION site Superintendent about alternative action plans.

20.9. The TRADE PARTNER is required to complete the DAILY HOISTING PERMIT for all critical lifts. Critical Lifts are lifts in which a crane that is using 75% of the crane chart capacity or lifts involving more than one crane. A Daily Hoisting Permit form is in the Project Specific Safety Plan.

21. NON-CRANE HOISTING – when using equipment such as but not limited to pulley, winches, come-a-longs, forklifts and gantry systems, the hoisting system must be designed and engineered to be used in such a manner. The hoisting system includes all hoisting equipment and components, anchor points, attachment points and rigging. Documentation, including the weight of objects being hoisted and capacity of each hoisting component and hoisting system as a whole, must be provided to Pepper Construction prior to hoisting.

22. DRONE USAGE - If the usage of an aerial drone is required by any Trade Partner/vendor on any PCCI project sites, the Trade Partners/vendors must contact the appropriate PCCI Drone Program Manager, Ethan McDonald for consultation with the PCG Legal Department prior to use and to ensure that the Trade Partner meets requirements as outlined in FAA's Small UAS (Unmanned Aircraft Systems) Rule (Part 107).

23. DEMOLITION - Demolition of existing electrical, plumbing, and/or mechanical must not commence without the following steps.

23.1. **The utility must be identified and marked by the trade responsible for that utility.**

23.2. **Markings will be placed at 4ft (max) intervals and be color-coded that signify the following:**

23.2.1. Green – Safe to Cut and Remove

23.2.2. Red or not color coded Do Not Cut or Remove – Stop Work and contact PEPPER CONSTRUCTION supervision.

23.2.3. Yellow – Dead but staying in place

23.2.4. Orange – Environmental (Asbestos, lead, PCBs)

23.3. Surveying tape for color coding/flagging of the 'to be removed' materials and mechanicals shall be used.

24. DRUG & ALCOHOL POLICY

24.1. All illegal and unauthorized substances, drugs, look-alike drugs, synthetic drugs, alcoholic beverages, and drug paraphernalia are strictly prohibited on PEPPER CONSTRUCTION jobsites.

24.2. Persons or TRADE PARTNER employees found to be using or in possession of, or concealing of any of the above items, will not be allowed on the PEPPER CONSTRUCTION jobsite.

24.3. Any employee of the TRADE PARTNER, suspected to be under the influence of drugs or alcohol, will be referred to their supervisor to determine their compliance to this Drug & Alcohol Policy and further disposition of the employee.

24.4. All employees, their vehicles, and personal property are subject to search and inspection, before entering or departing a PEPPER CONSTRUCTION job site.

24.5. PEPPER CONSTRUCTION has adopted a "Zero Tolerance" policy regarding drug or alcohol usage. Drug or alcohol use during the work shift is prohibited (This includes breaks and lunch).

24.6. **On projects in Indiana, all contractor employees must possess a valid Substance Abuse card w/Photo ID, prior to working on a Pepper Construction project.**

24.7. Pepper Construction will utilize the Construction Safesite system to verify whether the employee is "available" or "not available" for work.

24.8. All contractors must verify their employee's availability before sending them to a Pepper Construction project.

24.9. The following cards are accepted, CCS, IUCSAT, Quality Connection, Mechanical Pipe Trades, and ABC Trades card. A valid substance abuse card that meets the IUCSAT substance abuse program requirements, verifies that contractors have successfully complied with Pepper Construction's substance abuse policy.

24.10. Employees who have participated in a substance abuse test that fulfills Pepper Construction's testing requirements may obtain a CCS card by contacting DISA Global Solutions (holder of the CCS database) and presenting the test information for review. The card may be issued if the testing parameters are the same as the Pepper Construction Substance Abuse policy requirements.

24.11. Tradesmen shall present their photo ID and valid substance abuse card to the Pepper Construction onsite representative for documentation. In the event a card is lost supplemental info will be accepted until a new card is issued. Tradesmen that do not have a valid substance abuse card shall not be permitted on site until such time as one is obtained.

25. ELECTRICAL

25.1. TRADE PARTNERS are responsible for maintenance of their extension cords, electrical tools, and equipment. Defective extension cords & equipment shall be removed from service immediately. OSHA requires daily inspection of extension cords, tool cords, and equipment cords.

25.2. **TRADE PARTNERS must always use GFCI's, even if using permanent building power.**

25.3. Temporary Power Installation - Temporary electrical power, such as receptacle and lighting wire, may not be installed on PEPPER CONSTRUCTION sites as open conductors. Open conductors are copper conductors covered with one layer of insulating material. **Temporary wiring connections with open conductors and /or utilizing wire nuts must be wrapped with electrical tape for additional protection. Temporary electrical service conductors, unless installed in metallic raceways, must utilize flexible cords and cables which carry the trade name "HARD SERVICE" or "JUNIOR HARD SERVICE", as defined in the 2002 edition of the NEC/Article 400/Table 400.4.**

25.4. Electrical extension cord use:

25.4.1. All cords shall be designed for hard or extra hard usage. (Not less than 12-gauge conductors)

25.4.2. Contractors shall identify all extension cords with a tag or be imprinted identifying the contractor company name.

25.4.3. All extension cords and portable equipment shall be inspected prior to each use.

25.4.4. Any damaged or defective cord or tool shall not be used. Any worn, frayed or damaged extension cords shall be removed from service. **Damaged extension cords may not be repaired and put back into use.**

25.4.5. Extension cords shall be placed so they do not cause slip, trip or fall hazards. Where cord sets have the potential to be damaged or where sets pose an unsafe condition, cords shall be suspended at a minimum of 8' above the work area or otherwise protected from damage. **Means used to protect cords from damage shall not create a slip, trip, or fall hazard to workers as well as the public. Circumstances in which carts, aerial/scissor lifts, workers, or the public must traverse over cord sets the protection must protect the cord from damage as well as prevent a slip/trip fall hazard.**

25.4.6. End of Day Roll-Up: Each contractor and/or TRADE PARTNER is responsible for disconnecting all extension cords from electrical sources at the end of the day or working shift with exception of cords used for running essential equipment such as pumps and battery chargers. All extension cords shall be "rolled up" and stored at appropriate storage areas such as (gang boxes, material storage areas etc.).

25.5. Energized parts must be guarded per OSHA 1926 Subpart K.

25.5.1. The permanent or an acceptable temporary cover must be provided. Non-conductive material is acceptable for temporary covers. However, cardboard is an unacceptable temporary cover.

25.5.2. All temporary covers must have a positive fastening device to secure it to the panel. Magnetic temporary covers may only be used during the work shift for guarding if the personnel responsible for the open panels are required to leave the immediate area. Magnetic covers may not be used overnight or if tradesmen will not be present for the next shift.

25.5.3. It is acceptable to leave a panel open if the area that contains the panel is secured or isolated per the requirements of OSHA 1926.403 (i)(2).

25.5.4. All energized devices, such as light switches and electrical outlets, shall have non- conductive and positively secured covers in place. If devices are not energized, covers are not required per PEPPER or OSHA requirements. **The use of electrical tape as a substitute for covers is not permitted. If covers must be removed for the purpose(s) of drywall finishing, painting, wall covering installation or other types of work, all energized devices shall be de-energized and locked out/tagged out by a qualified person prior to cover removal.**

25.6. Any employee who may be working on or near (within 10') live electrical parts shall be qualified as explained in OSHA 1910 Subpart S. Live parts to which an employee might be exposed shall be put into an electrically safe work condition before an employee works on or near them, unless the employer can demonstrate that de-energizing introduces additional or increased hazards or is infeasible due to equipment design or operational limitations.

25.6.1. Examples of increased or additional hazards include, but are not limited to, interruption of life support equipment, deactivation of emergency alarm systems, and shutdown of hazardous location ventilation equipment or removal of illumination for an area.

25.6.2. Examples of work that may be performed on or near exposed energized electrical conductors or circuit parts because of infeasibility due to equipment design or operational limitations include performing testing or trouble shooting of electrical circuits that can only be performed with the circuit energized and work on circuits that form an integral part of a continuous process that would otherwise need to be completely shut down in order to permit work on one circuit or piece of equipment.

25.7. If the live parts cannot be placed in an electrically safe work condition, other safety related work practices shall be used to protect employees who might be exposed to the electrical hazards involved. Such work practices shall protect each employee from arc flash and from contact with live parts directly with any part of the body or indirectly through some other conductive object.

25.8. **It is the goal of PEPPER CONSTRUCTION to achieve 100% lockout/tagout when working on all systems that have the potential to become energized. If it is determined that lockout/tagout can't be achieved, the TRADE PARTNER must implement an energized work safety policy. If this policy must be implemented, immediate notification of the PEPPER CONSTRUCTION Superintendent shall occur prior to initiating the work.**

25.9. Lockout/Tagout Procedures shall be followed when work is to be performed on de-energized equipment. TRADE PARTNERS are required to develop and implement an energy control or lockout/tagout program and maintain onsite.

26. EXCAVATIONS

26.1. At any time, a TRADE PARTNER-controlled employee is involved in the creation of, or working in, any trench or excavation, that TRADE PARTNER must provide an on-site COMPETENT PERSON who has certification of excavation task specific training. This documentation must be provided to the PEPPER CONSTRUCTION site Superintendent upon request.

26.2. **The TRADE PARTNER shall attend a Daily Coordination Meeting - The PEPPER CONSTRUCTION Superintendent and the TRADE PARTNER(s) will meet before work starts at the beginning of each shift.** The meeting agenda shall contain the following items:

26.2.1. Review and Completion of the "DAILY EXCAVATION AND UNDERGROUND UTILITY DAMAGE PREVENTION PERMIT"

26.2.2. A discussion plus documentation of previous days (shift) trenching and excavating activities on the Master Utility Location Drawing.

26.2.3. A discussion of the scope and location of work for the days (shift) work.

26.2.4. Verification of known underground utility locations and applicable private and public locates using the UUDP Deliverable.

26.2.5. Discussion of any private and public locates or relocates needed for upcoming trenching and excavating activities.

26.2.6. Review of the excavation protective system i.e. sloping, benching, trench box prior to being utilized during the shift.

26.2.7. Review of the pot-hole/daylight/hand excavation procedures for all located utility crossing points.

26.3. **TRADE PARTNER Tradesmen Task Hazard Analysis - TRADE PARTNERS shall perform a Task Hazard Analysis for each trenching and excavating activity.** If more than one activity occurs in a shift, additional THA's shall be performed. Agenda shall include:

26.3.1. Work scope.

26.3.2. Known overhead and underground utility locations and applicable private and public locate markings,

26.3.3. Requirement that limits machine excavating, digging or auguring up to a 4-ft. limit on either side of the utility markings.

26.3.4. Requirement that all located utility crossing points are exposed by day lighting procedures with vacuum truck or hand excavate. Must have EYES ON buried utilities before continuing to machine dig.

26.4. **TRADE PARTNERS are required to install and maintain barricades around excavations/trenches to protect pedestrian and vehicular traffic from entering.**

26.5. Equipment operators and truck drivers must not operate closer than recommended minimum clearance distances from overhead or underground electrical wires. If work is required near these utilities, the TRADE PARTNER must consult with the PEPPER CONSTRUCTION site Superintendent about alternative action plans.

26.6. The excavation must be sloped or benched per OSHA standards, shored and /or safeguarded through the use of a trench box or other engineered earth retention device(s) when excavation reaches five (5) feet or greater in depth. Protection against cave-in at a depth of less than five (5) feet may be required if the COMPETENT PERSON determines that soil or other conditions warrant such protection.

26.7. **Pepper Construction UUDP Excavation Permits must be completed daily.**

27. EXCAVATIONS - UNDERGROUND UTILITIES

27.1. Our goal is to eliminate underground utility damage incidents on our projects, and to deliver accurate as-built information on utilities installed during our projects.

27.2. Each SUBCONTRACTOR shall attend the Safety Plan Review meeting per Section 5 item 5.2 of the Safety Handbook. The Underground Utility Damage Prevention policies and procedures specific to this project will be discussed in the meeting.

27.3. Each SUBCONTRACTOR shall attend a SAFETY ORIENTATION pursuant to section 8 of the Safety Handbook. The Underground Utility Damage Prevention policies and procedures specific to this project will be discussed in the orientation.

27.4. Each SUBCONTRACTOR shall follow the processes outlined in section 27 EXCAVATIONS of the Safety Handbook. This includes attending daily coordination meetings lead by the PEPPER CONSTRUCTION Superintendent. Coordination meetings will take place PRIOR to commencing work on any given day.

27.5. Each SUBCONTRACTOR will perform a Task Hazard Analysis for each trenching and excavate activity and will review with the PEPPER CONSTRUCTION Superintendent prior to commencing work on any given day.

27.6. Each SUBCONTRACTOR performing underground work is required to call in their own public utility locates and keep the dig numbers valid per 811 laws.

27.7. PEPPER CONSTRUCTION will coordinate and schedule the private utility locates

27.8. Each SUBCONTRACTOR shall perform potholing of underground utilities to get “Eyes-On” the utility PRIOR to continuing with machine excavating for the work at the following conditions:

27.8.1. Where the excavation for the new utility crosses any underground utility

27.8.2. Where the excavation for the new utility is within 4 ft of either side of the onsite utility marking (i.e. paint or flags)

27.8.3. Where the PEPPER CONSTRUCTION superintendent directs the SUBCONTRACTOR to do so

27.9. Each SUBCONTRACTOR shall survey their installed utility PRIOR to backfilling. Survey shall be performed in accordance with the Survey Data Requirements Below and shall be delivered to PEPPER CONSTRUCTION no later than 24 hours after the data is collected.

27.10. As-Built Survey Data Requirements of **New Underground Utilities**

27.11. Newly installed utilities as a part of the contractor's scope of work shall be surveyed prior to backfill of utility as follows:

27.11.1. Survey top of utility elevation

27.11.2. Document size of utility at each survey point

27.11.3. Document type of utility at each survey point

27.12. Utilities shall be surveyed at the following frequency

27.12.1. At the start and end of each utility run

27.12.2. At each change in direction of the utility and/or at each tie in to new or existing structures

27.12.3. At each change in elevation of the utility (excluding changes in elevation due to gravity slope of piping)

27.12.4. If an "As-Built Intent Plan" is provided in the scope of work, as-built data should be collected on utilities at locations in conformance with this plan.

27.13. Information shall be provided in a format as follows:

27.13.1. Information can be generated using AutoCAD, Civil 3D, or similar

27.13.2. Information shall be delivered in the .dwg file extension version 2010 or newer

27.13.3. Coordinate System of CAD file to be in accordance with the State Plan Coordinate system.

27.13.4. Points shall be represented by linework in the CAD file as follows

27.13.4.1. Points shall be represented with linework or Civil 3D points

27.13.4.2. Points shall be shown at the correct "X, Y, Z" location relative to the project's site CAD file provided by the design team and/or Pepper Construction

27.13.4.3. Points shall be accompanied by a text label/annotation clearly noting elevation of top of utility, size of utility, and type of utility

27.13.4.4. Points shall be connected by linework to indicate the complete run of the system

27.13.5. Points shall be provided in a .csv file format in PENZD format

27.14. Where possible and at the direction of the Pepper site superintendent, sight tubes should be installed at locations where as-built survey data has been collection for reference throughout the project.

27.14.1. Install minimum diameter 4" PVC pipe on top of the exposed utility

27.14.2. Install removable cap

27.14.3. Write on outside of pipe (above grade) the utility type, utility size, and appx utility depth below grade

27.14.4. Top of sight tube should be 2' above grade U.N.O.

28. FALL PROTECTION

28.1. A fall protection program is designed to provide the required methods to prevent employees from exposure to or suffering an injury due to a fall from an elevation. Due to the extreme severity of fall related injuries, TRADE PARTNERS must exercise every precaution required. The use of fall protection systems and equipment is required on all PEPPER CONSTRUCTION jobsites. Any employee found to be in violation of PEPPER CONSTRUCTION Fall Protection requirements is subject to immediate removal from the jobsite. A "Fall Protection System" is defined as some engineered, physical means or methods that are designed to eliminate a fall exposure to employees. Under OSHA 1926 Subpart M, it is required to provide "Guard Rail Systems, Safety Net Systems or Personal Fall Arrest Systems." General Requirement: Fall protection is required whenever employees are exposed to falls of six (6) feet or greater, to a lower level.

28.2. OSHA 1926 Subpart M states that there may be work activities that qualify for an exception to the six (6) foot rule. However, it continues to state, "There is a presumption that it is feasible and will not create a greater danger to implement at least one of the above referenced systems." PEPPER CONSTRUCTION supports this presumption of feasibility, and any exception must have the approval of the PEPPER CONSTRUCTION Safety Department and site Superintendent. It has been demonstrated that effective fall protection can be provided for many concrete leading-edge operations, pre-cast plank and double-T erection, and low sloped (4 in 12 or less) roofing operations. It is required that the appropriate fall protection systems be provided. This must be addressed in the Site-Specific Safety Plan that each TRADE PARTNER is contractually required to provide to PEPPER CONSTRUCTION.

28.2.1. **Concrete Leading-Edge Operations -** Engineered fall protection systems must be used to minimize fall exposures.

28.2.2. **Roofing** – A Fall Protection System is required for all low sloped (4 in 12 or less) roofing operations when the fall distance exceeds six (6) feet. Safety monitors are not considered positive fall protection. In addition, any employee engaged in the installation of sheet metal materials (including but not limited to flashing, coping caps, etc.) must use a Fall Protection

System. Skylights shall be considered the same as a roof opening/hole and protected as such.

28.2.3. **Warning Line Systems:** Roofing and Non-Roofing Work on low sloped roofs – All trade tasks not limited to roofing work being performed on low-sloped roofs must install a warning line system. **The warning line system must be created with flagging or barricades and be established at a minimum of fifteen (15) feet from unprotected sides or edges, including skylights and roof openings/holes.** A flagged or barricaded path must be established and maintained from the point of access to the warning line system. Any employee outside the warning line system must utilize a Fall Protection System.

28.2.3.1. **Lines: Warning lines must have a minimum tensile strength of 500 pounds and may be made of rope, wire, or chain. They must be also marked or flagged at not more than 6-foot intervals with high-visibility material. Lines must be rigged and supported in such a way that their lowest and highest points are no more than 34 inches and 39 inches, respectively, above the surface. Supports: Lines supported by stanchions must be installed so that the slack between two stanchions can't be taken up before the stanchions tip over. Stanchions must be able to withstand a 16-pound horizontal force applied 30 inches above the working surface. The force must be applied perpendicular to the warning line and in the direction of the roof edge.**

28.2.3.2. **Rope grabs: rope grabs are to only be used in a vertical orientation only. Retractable lanyards are to be used in the place of rope grabs when there is the need to tie off for leading edge work.**

28.2.4. **Steel Erection –** All steel erection activities (erectors, connectors, and decker's) are contractually required by PEPPER CONSTRUCTION, to include 100% fall protection when fall hazard is six (6) feet or greater.

28.2.4.1. **The TRADE PARTNER (fabricator and their erector) is required to submit in writing a detailed plan of all fall protection to be used on the project.** This includes a detailed analysis of all fall hazards greater than six feet. The plan shall include a detailed description of the specific personal fall arrest systems to be used

including manufacturers and/or engineered designs, limitations of use, and the minimum clearance distance required for the system to prevent the worker from striking the floor/deck below. Systems that do not prevent contact with the surface below will not be permitted.

28.2.4.2. **PEPPER CONSTRUCTION further requires that decking be installed every two stories or thirty - (30) feet, whichever is less, before erecting additional levels.**

28.2.4.3. Any exceptions based on feasibility or constructability constraints must have the written approval of the PEPPER CONSTRUCTION Safety Department, Project Manager and site Superintendent.

28.2.4.4. Working floors to be considered "controlled access" areas for ironworkers and decker's only until the floor has achieved 100% fall protection unless personal fall protection systems are utilized. **All openings to be covered and cabled before access by other trades.**

28.2.4.5. **All openings greater than 16 square feet shall have cable guardrail systems installed in addition to being covered.** Stanchion support locations should be coordinated to facilitate installation of interior shaft walls. If necessitated by fall protection distance requirements, stanchion installations should occur after decking on the floor above has been completed.

28.2.4.6. Cable must not deflect more than 2 in. when a 200-lb. force is applied. If a 2-in. deflection is exceeded additional intermediate supports must be provided. Maximum 2-in. deflection must be maintainable. **Maximum distance between supports is 15 feet. Bracing/Kickers shall be provided at corner stanchions to maintain plumb when cables are pulled tight. The cable shall be provided with a positive tensioning device (such as a turnbuckle) which will reduce the sag in the cable to not more than 2 inches in a 20-foot span. The tension device shall have a breaking strength of not less than 10,000 pounds.**

28.2.4.7. **Roof levels must be protected with a Perimeter Guardrail System (top rail and mid- rail). PEPPER CONSTRUCTION must approve variations due to job conditions of this requirement.**

28.2.4.8. **Overhead protection – On multi-story steel erection projects, a minimum of two decked floors one of which must be poured shall be in place between the erector's raising gang and trades below whose work is unrelated to the steel erection process.**

28.2.4.9. 12 ft. Rated Lanyards: 12 ft. rated double hook or (Y) lanyards will be required when employees are tying off at their feet and/or when circumstances exist where the free fall distance prior to the lanyard engaging is beyond or exceeds six feet (6 ft.).

28.2.5. **Masonry Fall Protection (Overhand Operations) - A Fall Protection System must be provided to all workers exposed to a six (6) foot or greater fall hazard. Therefore, the OSHA 1926 Subpart M fall protection exception does not apply to overhand bricklaying operations on PEPPER CONSTRUCTION projects.** This includes those engaged in overhand work including the laying of brick, block, and related materials, striking, and brushing joints. In relation to operations included in OSHA 1926 Subpart L, Scaffolding, all regulations shall be followed.

28.2.6. Floor Openings & Perimeter Protection – Guardrail systems are provided at the perimeter, stairway openings, and shaft openings. **Smaller floor openings, including those less than 2" in diameter, are to be covered and secured.** This is done to provide for the safety of all personnel on the job site.

28.2.6.1. A guardrail system is defined as a toprail @ 42", a midrail @ 21", and includes a toeboard.

28.2.6.2. Hole covers must be installed and maintained. If a hole cover is removed by another trade that TRADE PARTNER or trade assumes responsibility to cover and maintain that hole.

28.2.6.3. Hole covers shall be designed to withstand twice the weight of workers, equipment, and materials. Floor covers must be raised or suitably barricaded to prevent overloading from mobile equipment such as scissors and boom lifts.

28.2.6.4. Covers shall be secured against displacement horizontally and vertically.

28.2.6.5. All covers shall be marked with the words “HOLE, FLOOR OPENING, OR DO NOT REMOVE.”

28.2.6.6. **All floor covers must be sealed to the floor with watertight sealant unless otherwise specified by PEPPER CONSTRUCTION supervisor or Safety Department**

28.2.6.7. If a TRADE PARTNER finds it necessary to remove a guardrail system, an authorized PEPPER CONSTRUCTION representative must be notified, and the removal and replacement of the protective device is to be coordinated with them. This procedure is critical in assuring that these systems maintain their required protective designs.

28.2.6.8. Should a TRADE PARTNER damage any protective system, they must notify an authorized PEPPER CONSTRUCTION supervisor immediately. Do not remove or repair these systems without notifying PEPPER CONSTRUCTION. Whenever guardrail systems or covers are removed, employees must be protected with appropriate fall protection systems. Failure to replace protective systems, may subject the responsible employee to removal from the jobsite. Further, **failure to replace protective system will result in PEPPER CONSTRUCTION performing this work and the cost for this activity will not be negotiable, based on the SUBCONTRACT AGREEMENT with the respective firm.**

28.3. **Leading Edge rated lanyards – leading edge rated lanyards (Class 2) will be required when an employee's anchor point is below the employee's dorsal D-Ring, and in the case of a fall, the lanyard would contact sharp edge, such as, but not limited to, steel, metal decking and concrete.**

29. CONTROLLED DECKING ZONE – Controlled Decking Zone - A controlled decking zone will be established in that area of the structure over 6 feet above a lower level where metal decking is initially being installed and forms the leading edge of a work area. In each CDZ, the following shall apply:

29.1. Each employee working at the leading edge in a CDZ shall be protected from fall hazards of more than 6 feet (1.83 m), whichever is less.

29.2. Access to a CDZ shall be limited to only those employees engaged in leading edge work.

29.3. The boundaries of a CDZ shall be designated and clearly marked. The CDZ shall not be more than 90 feet (27.4 m) wide and 90 (27.4 m) feet deep from any leading edge. The CDZ shall be marked by the use of control lines or the equivalent. Examples of acceptable procedures for demarcating CDZ's can be found in Appendix D to subpart 1926.761.

29.4. Each employee working in a CDZ shall have completed CDZ training in accordance with 1926.762

29.5. Unsecured decking in a CDZ shall not exceed 3,000 square feet

29.6. Safety deck attachments shall be performed in the CDZ from the leading edge back to the control line and shall have at least two attachments for each metal decking panel.

29.7. Final deck attachments and installation of shear connectors shall not be performed in the CDZ.

30. FALLING OBJECTS PREVENTION – Personal fall protection has long been the #1 priority in construction for good reason, as falls from height remain the most frequent cause of construction worker fatalities. Recently, a new type of fall protection is gaining momentum, falling object protection, due to the number of injuries and fatalities resulting from dropped or falling objects. When objects (tools, material, etc.) have the potential to drop to a lower level, some type of preventative measure must be taken. Examples of preventative measures include but are not limited to:

30.1. Controlled Access Zone – a physical barrier to prevent access to area(s) below overhead work.

30.2. Tool tethers – Tethers must be specifically designed for the sole purpose of preventing tools from being dropped. Job made products are not permitted.

30.3. Spotter – a person, designated as a spotter, must be positioned to prevent unauthorized access below overhead work. This person shall have no other duty while designated as a spotter. If the spotter must leave the area, the overhead work must cease.

31. FIRE PROTECTION

31.1. Good housekeeping practices are the singularly most important element of fire protection. Combustible materials must be placed in trash receptacles and removed by the TRADE PARTNER performing the work from the project in a timely fashion.

31.2. When portable heaters are used, make certain they are placed well away from the combustible materials (both side to side and above and below.)

31.3. Temporary heaters will be checked for correct operation prior to being put into service each day.

31.4. Fire extinguisher shall be placed in conspicuous areas and be accompanied with proper signage.

31.4.1. All fire extinguishers shall be placed in boxes or on stands painted red, or hung on walls with red backboards at approximately 48" height. No fire extinguisher may be allowed to rest on bare ground.

31.4.2. One portable dry chemical fire extinguisher not rated less than 20lb ABC to be provided within five (5) feet of wherever gasoline operated equipment is being used.

31.4.3. Fire extinguishers are not to be tampered with or removed from assigned locations (except for emergency use). If discharged for any reason, the fire extinguisher must be replaced or recharged immediately.

31.5. Procedures to be followed in the event of a fire should be rehearsed regularly.

31.6. Hot Work Operations - In occupied buildings or at the discretion of the PEPPER CONSTRUCTION Superintendent a Hot Work Permit is required for operations or activities involving an open flame or work which may produce sparks or smoke including but not limited to: welding, torch cutting, soldering, grinding, chop saw use and open flames.

31.6.1. Permits are valid for only the date, shift, and location indicated.

31.6.2. It is the responsibility of the TRADE PARTNER to provide adequate fire extinguishers in the work area. One portable dry chemical fire extinguisher not rated less than 20lb ABC to be provided within twenty-five (25) feet of work.

31.6.3. A fire watch shall be maintained whenever welding, cutting, or spark producing operations take place and there is a threat of fire.

31.6.4. A properly trained fire watch shall be provided and shall have no additional duties.

31.6.5. Fire watch shall be continued for a minimum of (40) minutes after hot work has been completed. Procedures may vary by exposure.

31.6.6. The Hot Work Permit must be submitted to an authorized PEPPER CONSTRUCTION representative. The PEPPER CONSTRUCTION site Superintendent may designate an authorized person for this purpose. All guidelines contained within that Hot Work Permit must be followed.

31.6.7. Asphalt/Pitch kettles are covered by the Hot Work Permit Program. Tar Pots are always required to be attended . Under no circumstances shall “tar pots” be located closer than 35 feet to any combustible storage area.

31.7. **Flammable Storage/Use**

31.7.1. Gasoline and other flammables must be kept in an approved metal safety can (approved by a nationally recognized testing laboratory) for the handling and use of flammable liquids. Further, a safety can, by definition, is a container with a capacity of 5 gallons or less and equipped with a spring-closing lid and spout cover, a means to relieve internal pressure, and flash-arresting screen. The limits of quantities stored must meet local, state, and/or federal regulations. Plastic gas cans are prohibited. Flammables must be stored in properly labeled containers (HAZCOM requirement). It is the responsibility of the TRADE PARTNER to provide adequate fire extinguishers. Smoking is strictly forbidden in areas where flammables are stored or used. “NO SMOKING” signs must be posted and obeyed.

31.7.2. Portable fuel tanks will be installed in accordance with federal, state and local requirements. It is the Contractor's responsibility to secure all required permits and provide proof of same.

31.7.3. Flammable liquids shall be stored outside, away from buildings, in a safe and secure location in standard approved storage containers or tanks.

31.7.4. No flammables may be stored inside tool trailers, job toolboxes or other closed locations.

31.7.5. Storage of fuel gas cylinders shall be outside in an area approved by PEPPER CONSTRUCTION.

31.7.6. Portable tanks not to be nearer than 20 feet from any building. Portable fuel tanks/containers are not allowed inside the building under any circumstances.

31.7.7. At least one portable fire extinguisher having a rating of not less than 20-B units shall be located not less than 25 feet, nor more than 75 feet, from any flammable liquid storage area located outside.

31.7.8. Fueling and refueling operations for equipment, whether gasoline or diesel, shall be done outside of the building, no closer than 35’ from the building.

31.7.9. Liquefied Petroleum Gas (L-P Gas) - Storage of L-P gas cylinders within buildings is strictly prohibited. L-P gas containers, when in use, must stand on a substantially level, firm surface and secured in an upright position to prohibit falling, tipping or toppling of containers. Heating equipment must

be located at least 6 feet from L-P gas containers and the heat directed away from the containers.

32. HAZARD COMMUNICATION

32.1. In accordance with PEPPER CONSTRUCTION's Hazard Communication Program, all hazardous material containers must be properly labeled. Every TRADE PARTNER must supply a Safety Data Sheet (SDS) to the PEPPER CONSTRUCTION site Superintendent at least seven (7) days before introducing a hazardous material to the jobsite. A list of the hazardous materials used on the jobsite by the TRADE PARTNER will be maintained in the TRADE PARTNER'S file. An additional set will be maintained in PEPPER CONSTRUCTION's site job file.

32.2. The TRADE PARTNER must maintain their written HAZCOM Program at the jobsite, along with the training program utilized for their employees. Revision to this program must be provided when requested by the PEPPER CONSTRUCTION Site Superintendent or Safety Department.

32.3. The SDS must be maintained on the job site. A copy of the PEPPER CONSTRUCTION HAZCOM Program may be obtained from the PEPPER CONSTRUCTION Safety Director's office located at 1850 W 15th Street, Indianapolis IN 46202, upon written request.

32.4. All chemicals on site will be stored in their original or approved containers with a proper label attached. Any container not properly labeled should be given to the Contractor Supervisor for labeling or proper disposal.

32.4.1. Immediate us means that the hazardous chemical will be under the control of and used only by the person who transfers it from a labeled container and only within the work shift in which it is transferred.

33. HOUSEKEEPING

33.1. **Our policy is "nothing hits the floor".** All work operations shall be provided with appropriate trash receptacles for debris, scrap, cutoffs and packaging. All debris, especially combustible scraps and debris must be cleared from the building and work areas daily.

33.2. **Daily housekeeping by each TRADE PARTNER is essential for maintaining a safe job site. TRADE PARTNERS are responsible for housekeeping procedures in their respective work areas. The working definition for Daily Housekeeping at PEPPER CONSTRUCTION is as follows:**

33.2.1. All debris, especially combustible scraps and debris must be cleared from the building and work areas daily.

33.2.2. Nails, wire ties, and other accessories shall be promptly removed from lumber or any other used lumber at the time of stripping or dismantling. If it is not practical to remove or bend nails in used lumber to avoid tripping hazards and nail traps, the lumber must be stacked for cleaning and re-use. Lumber must not be scattered.

33.2.3. The work site, especially stairways and walkways, shall be kept clear of obstructions that may create tripping or other hazards.

33.2.4. Tools must be stored in toolboxes. If laid aside temporarily, the tools must be placed where they will not present a hazard. Tools must not be placed in a position to fall on someone at a lower level.

33.2.5. All construction materials and supplies stored neatly in designated areas.

33.2.6. Floors shall be swept daily using wax based sweeping compound to remove accumulated construction dust.

33.3. **TRADE PARTNER failure to maintain their work areas as required or directed will result in PEPPER CONSTRUCTION performing this clean-up. The cost for this activity will not be negotiable, based on our SUBCONTRACT AGREEMENT with the respective firm.**

34. INDOOR AIR QUALITY - In General the use of gas-powered equipment is prohibited within the building structure. If no other feasible option, the contractor using said gas powered equipment must provide safeguards: such as, continuous CO air monitoring for the duration of the work in that same area, installation of scrubbers on the equipment used, local ventilation, or scheduling off hours. All Federal and Local requirements must be followed.

35. LADDERS - Our goal is to reduce the risk posed by using ladders to access work at height by reducing the overall percentage of work completed using ladders. This involves Identifying alternatives to ladder use for work scopes at the planning phase. Alternatives to ladders include scissor lifts, man lifts, and scaffolds.

When ladders are determined to be the best option the following requirements apply:

35.1. **Step ladders 6' or greater of working height shall be platform ladders unless the users are protected with suitable fall personal fall protection systems.**

35.2. All ladders must be used in strict accordance with the manufacturers and ANSI requirements.

35.3. Step and extension ladders shall be constructed of fiberglass and rated Type IA, IAA or IAAA. **Wood and metal ladders are prohibited.**

35.4. Whether using portable, fixed, or job-made ladders, proper safety precautions must always be followed. Employees must always ascend or descend a ladder with three (3) points of contact.

35.5. Ladders must be inspected daily; broken or damaged ladders will be removed from service immediately and destroyed.

35.6. Extension ladders cannot be separated for use as single units. Extension or straight single ladders must be properly secured at the top and if possible, the bottom. A minimum of thirty-six (36) inches is required above the top access point of an extension or straight ladder.

35.7. Documentation of ladder safety training must be provided at the request of the PEPPER CONSTRUCTION site Superintendent.

35.8. For work from ladders within ten feet of the exposed edge or perimeter of the building or structure; where other positive means of conventional fall protection do not already exist; positive means of fall protection, such as but not limited to personal fall arrest systems (PFAS) will be employed.

36. MASONRY CONSTRUCTION

36.1. A Limited Access Zone shall be established whenever a freestanding masonry wall is being constructed.

36.2. The Limited Access Zone shall be established before the start of the wall construction, equal to the height of the wall to be constructed plus four feet, run the entire length of the wall, and established on the side of the wall that will not have scaffold installed.

36.3. Limited Access Zone entry is restricted to employees who are actively engaged in the construction of the wall. No other employees shall be permitted to enter the zone.

36.4. The Limited Access Zone shall remain in place until the wall is adequately supported to prevent overturning. OSHA considers bracing as adequate support.

36.5. An engineered bracing design shall be used for all freestanding masonry walls over eight (8) feet in height to prevent overturning and collapse. Bracing shall remain in place until permanent supporting elements of the structure are in place.

36.6. All block and brick cutting activities that create the potential for respirable crystalline silica dust exposure shall use water as an engineering control. If it is determined by

PEPPER that water cannot be used, all exposed employees shall wear approved respirators and the operation shall be in an area where non-protected employees and the general public are not exposed to silica containing dust.

37. MATERIAL HANDLING

37.1. Materials shall not be stored outside of designated construction areas.

37.2. **Sheet materials (ex: drywall, plywood, oriented strand board, hardboard, fiberboard, overlay plywood) and doors shall not be stored on edge or on drywall carts.**

37.3. **In order to maximize mobility and safe transport of materials, loading of drywall carts shall be limited to one half of the rated weight capacity.**

37.4. **Metal banding shall not be used for concrete formwork. Acceptable means include poly or nylon.**

37.5. **Material Handling for Multi-Story Structures**

37.5.1. The practice of swinging or pulling a suspended load into a building by any method is strictly prohibited. This practice places employees, equipment, and the structure at substantial and unnecessary risk. This operation must be analyzed in the site-specific safety plan.

37.5.2. Proper loading systems including, but not limited to, are: material/man hoists, platform lifts, landing platforms or lookouts.

37.5.3. If guardrails are removed on landing platforms, lookouts or hoists, personal fall protection must be provided for exposed employees. Additionally, if guardrails are removed, flagging must be installed to warn of fall hazard or unprotected edge condition.

37.6. **Free-Rigging is prohibited: Free rigging is the direct attachment to or placement of rigging equipment (slings, shackles, rings, etc.) onto the tines of a powered industrial truck for a below-the-tines lift. This type of lift does not use an approved lifting attachment.**

37.7. Personnel are strictly forbidden from riding on material hoisting equipment at any time.

38. MOTORIZED EQUIPMENT

38.1. All motorized equipment that has limited or obstructed view by the operator during reverse or backing up movement, must have a back-up alarm installed and operating. This includes skid steer equipment.

38.2. All operators of motorized equipment/machinery must wear seatbelts if said equipment has been manufactured with one.

38.3. All equipment operators must shut down their engines during the refueling process. Fire extinguisher(s) must be readily available during refueling, located within twenty-five (25) feet of lateral distance.

38.4. Only authorized person's licensed and certified as required by local, state or federal mandates, shall operate machinery, equipment, tools or vehicles.

38.5. **No riders on machinery or equipment without proper seating accommodations. Riders in trucks are to be seated, in a seat while the vehicle is moving. No workers may be transported in the back of a pick-up truck AT ANY TIME.**

38.6. All mobile machinery must have operable backup alarms and/or flashing strobe type lights at ALL times.

38.7. A flag person must be used to direct the backing up of a vehicle in any congested or noisy area. Any flag person exposed to vehicular traffic must be properly trained and certified for this task and must always wear a reflective vest.

38.8. The use of a mobile phone while operating any power-industrial trucks or power-industrial equipment and earth moving equipment is strictly prohibited.

39. TRANSPORTATION OF PERSONNEL

39.1. **Transportation of persons in the back of pick-up trucks is prohibited.**

39.2. No person will be permitted to ride with arms or legs outside of a vehicle body, in a standing position on the body, on running boards, seated on side fenders, cabs, cab shields, bed of the truck or on the load.

39.3. The number of passengers in passenger-type vehicles shall not exceed the number that can be seated

39.4. Trucks used to transport personnel shall be equipped with a securely anchored seating arrangement, a rear end gate, and guardrail. Steps or ladders, for mounting and dismounting, shall be provided.

39.5. All tools and equipment shall be guarded, stowed, and secured when transported with personnel.

39.6. Vehicles transporting personnel shall not be moved until the driver has ascertained that all persons are seated, and the guardrails and rear end gates are in place or doors closed.

39.7. Getting on or off any vehicle while it is in motion is prohibited.

39.8. All motor vehicles shall be shut down prior to and during fueling operations.

40. PERSONAL PROTECTIVE EQUIPMENT

40.1. TRADE PARTNERS are responsible for providing their employees with all necessary PPE.

40.2. Clothing - Appropriate clothing must always be worn. **Clothing must consist of long pants and a shirt that covers the shoulders with a minimum 4" sleeve. Clothing must not be torn and must be free of offensive sayings or pictures. Loose clothing, shorts, athletic shoes, or sleeveless shirts are not permitted on the jobsite.** Jewelry of any kind is strongly discouraged on the jobsite. The risk of becoming "caught on" or "caught in" increases substantially when necklaces, dangling jewelry, or rings are worn.

40.2.1. High Visibility Clothing

40.2.1.1. Flaggers and workers exposed to hazards posed by vehicles, earth moving equipment, extendable boom forklifts and cranes shall wear high visibility reflective clothing. High visibility clothing is defined as reflective and fluorescent vests or shirts that workers should wear to make them more visible when working near traffic and heavy equipment, in all light conditions, day and night. The following guidelines shall be used for selection of high visibility clothing:

40.2.1.2. ANSI Class 1 garment: For workers that are separated from vehicular traffic that does not exceed 25 miles per hour; where background settings and worker tasks are not complex.

40.2.1.3. ANSI Class 2 garments: Necessary for greater visibility during inclement weather; where work background is more complex and is close to moving traffic and vehicles; workers' attention will likely be diverted from traffic traveling at speeds from 25 to 50 miles per hour.

40.2.1.4. ANSI Class 3 garments: Traffic speed is greater than 50 miles per hour; worker must be conspicuous and identifiable as a person through the full range of body motions at a minimum of 1,280 feet.

40.2.1.5. At the discretion of Pepper Construction, projects may require high visibility clothing 100% of the time.

40.3. Footwear - Construction workers and visitors are required to wear a well-constructed hard sole, closed-toe work shoe.

40.4. Gloves – Appropriate hand protection is required when employees' hands are exposed to hazards such as those from skin absorption of harmful substances; severe cuts or lacerations; severe abrasions; punctures; chemical burns; thermal burns; and harmful temperature extremes. Leather and cotton gloves are not considered cut resistant.

40.4.1. The use of cut resistant gloves is always required for trades with exposure to hand and finger cut hazards.

40.4.2. 100% hand protection is required for the following trades: ELECTRICAL, MECHANICAL, PLUMBING, CARPENTRY, DRYWALL, CONCRETE AND DEMOLITION.

40.5. **Hard Hats - Approved hard hats must be worn on the job site at all times**. TRADE PARTNERS are not allowed to work without hard hats. PEPPER CONSTRUCTION will not provide loaner hard hats to TRADE PARTNER's employees.

40.6. Hearing Protection - Appropriate hearing protection must be utilized for the anticipated noise levels encountered. The threshold for hearing protection is 90dBA.

40.7. Respirators - The use of some types of respirators requires a medical examination and documented fit testing. Documentation must be provided to PEPPER CONSTRUCTION and kept on file.

40.8. **Eye Protection - The use of safety glasses with side shields or other suitable eye protection is required at all times.** Additionally, face shields must be worn during the use of powder actuated tools, chop saws, partner saws, grinders, hydro vac excavating, or for tasks that create flying debris that can strike the face.

40.9. **Welding shields shall attach to hard hats.**

40.10. Roofing - All workers involved with charging of roofing kettles shall wear task specific PPE. These items would include hood that provides face/neck protection, suitable outer- wear and gauntlet gloves.

41. POWDER ACTUATED TOOLS

41.1. Only employees who have been trained in the operation of the tool in use shall be allowed to operate a powder-actuated tool.

41.2. All Personal Protective Equipment (PPE) required (including but not limited to eye protection, face protection, gloves and hearing protection) must be used during the

operation of the tool. All live loads remaining in a used clip shall be discarded properly.

41.3. Proper disposal could include a container of water or other closed container that does not allow accidental detonation of unused loads.

42. PUBLIC PROTECTION - Construction activities attract the public. TRADE PARTNERS must provide safety barriers, walkways, lighting, fences, and any other means necessary to protect the public from possible injury because of the TRADE PARTNERS work. This must be part of the site-specific safety plan.

42.1. Construction work areas must be barricaded and/or posted with appropriate signage. At no time shall work be performed over persons or aisles without such barricades in place to prevent access.

42.2. Red barricade tape is to be used to enclose hazardous work areas. Entry into these areas is restricted to authorized personnel.

42.3. Yellow barrier tape shall be used to enclose areas where caution must be exercised.

42.4. When steel plates, wood planking or similar covers are located where there is pedestrian traffic or exposure, they shall be tapered on all sides with cutback, cold mix or similar material to eliminate tripping hazards. Covers will be non-slip in nature or have a non- slip surface.

43. RADIOS - Electronic entertainment devices are prohibited in the job site work area. Radios are permitted in the site trailer or office primarily for public notification of emergencies (such as weather, security alerts, etc.). Repeat violations of this policy will result in the appropriate discipline, up to and including removal from the jobsite.

44. SCAFFOLDING

44.1. Per OSHA 1926 requirements, any employee that uses, erects, or dismantles a scaffolding system must be trained in this task. TRADE PARTNER documentation of this training must be provided to PEPPER CONSTRUCTION upon request.

44.2. **A scaffold tagging system shall be used to identify the status of each scaffold. Scaffold status should include the following categories: complete/all requirements met, complete/hazards noted, and/or incomplete do not use.**

44.3. **Fall protection at heights above 6 feet is required during scaffold erection and dismantlement. Fall protection systems may include horizontal static lines or vertical lifelines.**

44.4. The footings for scaffolding must be rigid, sound, and capable of carrying the load without settlement or displacement. Unstable objects such as barrels, boxes, loose brick, concrete blocks, or pieces of scrap lumber shall not be used to support scaffolding. Mudsills, base plates, and leveling jacks must be used.

44.5. **Standard scaffolding, whenever feasible, shall have guardrails (top and mid rails) whenever the work platform is located at six (6) feet or greater above lower level.** If X- brace pivot point is greater than thirty- eight (38) inches but less than forty-eight (48) inches above work platform, only a midrail is required. If X-brace pivot point is greater than twenty (20) inches but less than thirty (30) inches above the work platform only a top rail is required. All other scaffolding situations require guardrails per OSHA standards.

44.6. **All scaffolding that is less than forty-five (45) inches wide must have guardrails whenever the work platform is at forty-eight (48) inches or greater above lower level.** This includes Perry and Baker-type scaffolds. Toe boards are required to provide for falling object protection, unless the area below is barricaded and be considered a limited access zone.

44.7. Work platforms must be fully planked, except during the erection and dismantling process. At that time, two planks or an eighteen (18) inch wide (minimum) work platform will be provided. Planks must be scaffold grade or documentation provided substantiating that plank material to be of equal or greater strength. This includes planking used by concrete contractors on forming systems. All planking of work platforms must be overlapped a minimum of twelve (12) inches or secured from movement with cleats. Scaffold planks shall extend over their end supports not less than six (6) inches or more than twelve (12) inches. Planks must be inspected before each use and cracked or damaged planks must be removed from service prior to use.

44.8. **An access ladder or equivalent device, to allow safe access, must be provided for all scaffolding. If the fall distance exceeds 15', stair towers or internal ladder systems must be used. Safe access includes a gate, chains or other barriers that eliminate fall hazards after platform is accessed.**

44.9. All diagonal bracing must be in place and secure. Braces do not take the place of mid and top rails (except as noted above.)

44.10. The scaffold system must be tied to and securely braced against the structure per the minimum requirements of the OSHA standard. If the scaffolding system is to be enclosed for wind or weather protection, it must be designed by a competent person to withstand the additional loads.

44.11. **When work is to be completed in stairwells rolling scaffolds shall not be used.**

44.12. **Narrow frame scaffolds (Perry/baker type), are not designed to support additional pick boards, walk boards, or scaffold planks. This practice is not allowed.**

44.13. Training, inspection procedures, maintenance, and operation of self-propelled mobile scaffolds must comply with the manufacturer's requirements and documentation. This documentation must be provided when requested by the PEPPER CONSTRUCTION Safety Department or site Superintendent.

44.14. Outriggers or stabilizers must be used, as required, by the manufacturer, guardrails in place and access gates closed while unit is in use.

44.15. Minimum safe distances from energized power lines must always be maintained (refer to the site-specific safety plan).

44.16. Manually Propelled Mobile Scaffolds - All casters shall be provided with a positive locking device to prevent scaffolding from rolling. Platforms will be tightly planked for their full width. The floor or work surface must be free from voids, holes, or obstructions. The height of rolling scaffolds must not exceed four (4) times the shortest base dimension.

44.17. Two-Point Suspension Scaffolds - The roof iron or hooks shall be of proper size, design, and material. Installation must be secure and anchored properly under the supervision of a trained, competent person. Tiebacks shall serve as a secondary means of anchorage installed at right angles to the face of the structure and secured to a structurally sound element of the building. All employees must be trained in the hazards associated with suspended scaffolding, as well as the controls necessary to eliminate each hazard. Fall protection systems must be used in conjunction with suspended scaffolds.

45. STILTS

45.1. A competent person shall first train each employee who is assigned to wear stilts in the safe use and inspection of the equipment. The competent person shall also make the determination that the tradesman is proficient in the use of stilts before the tradesman is assigned to work on them.

45.2. Stilts shall be thoroughly inspected before each use.

45.3. Stilts shall only be used on hard level terrain, which is free of debris, slippery surfaces, electrical cords, or other obstructions, such as stored materials in the work path.

45.4. Tradesmen are responsible to notify their supervisors of any unsafe conditions or hazards concerning the safe use of stilts. Stilts shall not be used until all unsafe conditions have been corrected.

46. SCISSORS AND AERIAL LIFTS

46.1. Scissors and Aerial Lifts may not be "field modified" for uses other than those intended by the manufacturer unless the manufacturer has certified the modification in writing.

46.2. All lifts shall be inspected before use. Any deficiencies or equipment in need of repair shall be reported to the Superintendent or Foreman before use. If any equipment needs repair, the equipment shall not be used until authorization is received from the Superintendent or Foreman. Equipment in need of repair shall be tagged out until serviced. Inspection documentation shall be maintained with each piece of equipment for review.

46.3. Employees shall always stand firmly on the floor of the basket or platform, and shall not sit or climb on the edge or rails of the basket or use planks, ladders, or other devices for a work position.

46.4. Lifts shall not be loaded in excess of the designed working load. Lifts are designed for lifting personnel and small hand tools. Lifts are not to be used in lieu of a crane. Aerial lifts shall not be used to transport construction materials.

46.5. A full body harness shall be worn with a self-retracting lanyard attached to the boom or basket when working from an aerial lift.

46.6. Operator must have documented proof of training (available upon request) and use equipment as intended.

46.7. Lifts must not be field altered and must use only engineered attachments approved by the manufacturer. It is highly recommended that operator of lift does not work alone.

47. SILICA EXPOSURES – any TRADE PARTNER that may create respirable silica dust must develop and implement a site silica exposure control plan in accordance with OSHA Subpart Z 1926.1153.

48. UTILITIES - Equipment operators and truck drivers must be cautioned not to operate closer than recommended distances from overhead or underground electrical wires. If work is required near these utilities, the TRADE PARTNER must consult with the PEPPER CONSTRUCTION site Superintendent about alternative action plans. Whenever the TRADE PARTNER undertakes excavation work, it is their responsibility to contact the appropriate one

call locating services. Work may not start until these dig numbers have been submitted to the PEPPER CONSTRUCTION site Superintendent and the schedule of excavation approved.

49. **UTV (Utility Type/Terrain Vehicles) -** To safely operate a utility type vehicle, the operator must use similar safe work habits as used with tractors, skid steer loaders, and ATVs. A safe, successful driver should become familiar with the machine before using it. This can be done by reading the owner's manual and following safety labels found on the vehicle. A qualified operator (salesperson) can also demonstrate the correct operation.

    49.1. Safety practices to follow when driving a UTV:

        49.1.1. Maximum speed while operating a UTV on a Pepper jobsite is 5 mph.

        49.1.2. Always keep legs and arms inside the vehicle.

        49.1.3. Drive slowly and turn smoothly to avoid an overturn.

        49.1.4. When hauling cargo, the vehicle's center of gravity is raised, increasing the chance of overturning.

        49.1.5. Drive completely up or down a slope or hill before making a turn. Do not turn the vehicle in mid-slope or hill as this increases the probability of overturning.

        49.1.6. Use the appropriate speed on rough terrain.

        49.1.7. Operators and passengers have been thrown from vehicles.

        49.1.8. Stay clear of ditches and embankments.

        49.1.9. Passengers must be tall enough to reach handhold while their backs are against the seat and their feet are flat on the floorboards.

        49.1.10. Each passenger must ride in his/her own seat, not anywhere else on the UTV.

        49.1.11. Operators must back up carefully and utilize horn.

        49.1.12. Operators should be free from the influence of drugs or alcohol.

        49.1.13. Due to the hauling purpose of a UTV, special attention should be paid to making sure cargo or material is properly secured during transport.

50. **VISITORS** - Any person not directly involved with the on-site construction of this Project shall not enter the site without first going to PEPPER CONSTRUCTION's job office and signing a visitor's release and obtaining a hard hat and safety glasses which is to be returned to PEPPER CONSTRUCTION. Visitors must always be accompanied by a person that has attended site orientation, is responsible for that (person/group) visitor on site and is familiar with the

PEPPER CONSTRUCTION Site Safety Plan. All visitors must wear required PPE items such as hardhats, safety glasses, well-constructed hard sole, closed-toe work shoe and long pants. Visitors must not enter Construction or Restoration areas wearing shorts, skirts, open toed-shoes or high-heels. Visitors must sign-out when leaving the project. Note: Contractors are responsible and must always accompany equipment repair vendors brought on site.

51. WELDING AND CUTTING

51.1. The TRADE PARTNER must initiate a Hot Work permit with the PCCI Superintendent prior to conducting welding and cutting operations.

51.2. When necessary to provide protection for other employees and materials, screens or shields must be used where it is feasible.

51.3. All equipment used for welding and cutting including welding cables, gas cylinders, regulators and gauges, hoses, and torch sets shall be inspected each day before use.

51.4. **Flash back arrestors shall be installed at the oxy-acetylene regulators in addition to the required torch head protection.**

51.5. Valve protection caps shall always be in place except where cylinders are in use or connected for use. Regulators and hoses will be removed at the end of the work shift.

51.6. Compressed gas cylinders will not be stored inside of any structure – this includes gang boxes, storage trailers and similar closed spaces.

51.7. Personal Protective Equipment – Head and eye protection must always be worn. Hard hats with eye and face protection for welding applications. Safety glasses with side shields or goggles are required when chipping or grinding a work piece if not wearing a welding helmet. All fabric garments must be resistant to spark, heat, and flame. Respiratory Protection is needed when ventilation is not sufficient to remove welding fumes or when there is risk of oxygen deficiency. Suitable welding gloves are required.

51.8. Welding fume extractors must be used for all hot work in occupied facilities to prevent the spread of fumes and smoke. Local exhaust ventilation shall consist of freely movable hoods intended to be placed by the welder or burner as close as practicable to the work. This system shall be of sufficient capacity and so arranged as to remove fumes, smoke at the source, and keep the concentration of them in the breathing zone within safe limits as defined in OSHA 1926 Subpart D.

51.9. For all welding and cutting operations, keep 35’ clear of combustibles in all directions.

51.10. Shield combustible flooring with wet sand, fire retardant tarpaulins or sheet metal. Clean the area of oily deposits and trash. Cover any storage or other combustibles that cannot be moved away. It is the responsibility of the TRADE PARTNER to provide, install and maintain welding blankets when conditions warrant their use. Block off any duct openings where sparks can spread.

52. PRE-CAST / TILT UP WALL PANEL ERECTION

52.1. **Pre-cast wall erector is to submit a written erection plan to the project team at least 7 days prior to mobilization on site.**

52.2. **Erection plan must detail the following:**

52.2.1. Erection plan must document the competent person for erector. Any change of competent person on the project site requires a written notification to the project team.

52.2.2. Bracing plan: engineered drawing to be submitted to Pepper Construction and reviewed prior to erection of panels. Bracing must be installed per the engineered drawing, any deviation must be submitted and approved by the engineer of record.

52.2.3. Panel connection details: engineered drawing to be submitted to Pepper Construction, panel connection details must be reviewed by the erection competent person and the Pepper Construction Superintendent prior to starting erection.

52.2.4. At no time will a panel be erected and left without being braced or have all permanent connections installed per the engineered drawing. Any deviation from the plan must be submitted and approved by the engineer of record.

52.2.5. Panel connection details at all 90-degree connections or any connection that is not a butt joint must be installed per the engineered drawing.

52.2.6. Panel connection welds: welds must match details per the engineered drawing, any field modifications must be submitted and approved by engineer of record.

52.2.7. Rigging plan to be submitted in this document: details of all rigging needed including but not limited to specialty hardware for picking and tripping loads.

PEPPER QUALITY REQUIREMENTS

Pepper Construction
Tomorrow Transformed

Pepper Construction
Tomorrow Transformed

Trade Partner Quality Plan Guidelines

Pepper Construction is building a culture of quality where our project teams and trade partners take ownership of the work and build it right the first time. To take our quality culture to the next level, we are asking our Trade Partners to develop ***Job Specific Quality Plans (JSQP).*** *Trade Partner JSQP's can be in any format, but should generally answer the question, "How does the Trade Partner plan to control their quality on this project?" To sufficiently answer this question, Pepper anticipates a Trade Partner JSQP will cover the following areas:*

1. **Roles & Responsibilities for Quality Activities:**
   a. Quality Champion (on site) responsible for Trade Partner Quality Control
   b. Company officer responsible for Trade Partner Quality Assurance
   c. Quality Control Plan for Second & Third Tier Trade Partners
2. **Qualification & Certification:**
   a. Company qualifications meet specifications, including documented experience and qualification letters from manufacturers or industry/trade associations
   b. Crew member certifications, qualifications and experience meet specifications (i.e., welding certificates, manufacturer's certified installer, etc.)
3. **Submittals & Document Control:**
   a. Submittal process to ensure all required submittals are complete, approved and distributed to the field prior to starting work (a submittal is required for all installed products)
   b. Identify what other trade partner submittals are needed for coordination
   c. Identify plan for mockups required by the project documents or as recommended by the trade partner
   d. Document control process to ensure the field is working off the current set of documents
   e. RFI process to ensure questions are addressed to the proper authority, and answers are distributed to the field
4. **Materials & Equipment:**
   a. Shop prefabrication work procedures, verification process, and inspection/testing program
   b. Material delivery, inspection, handling, acclimation and storage processes
   c. Process to verify and document delivered and installed materials match submittals
   d. Material compatibility plan to identify any materials in contact with this trade partner's materials are compatible either through manufacturer review or on-site testing.
   e. Equipment inspection process to verify shop equipment is in good condition, safe and calibrated as necessary.
5. **Environment:**
   a. Temperature and humidity range required for quality installation, including any specific requirements for the type and duration of temporary heating or cooling. Include hot/cold weather procedures and products as recommended by the manufacturer, specification or applicable trade association.
   b. Process to monitor and document actual temperature and humidity readings during installation
6. **Installation, Inspection, Testing and Commissioning:**
   a. Mockup plan, including review and acceptance criteria and sign-off plan
   b. First work and follow-up inspection process including inspection checklist to be used
   c. Photo documentation plan including dissemination
   d. Non-conformance identification, tracking and correction process
   e. Inspection and Test Plan identifying requirements per code, contract documents, and manufacturer requirements. Must identify responsibility for testing and include allowable parameters.
   f. Manufacturer Site Visit plan as appropriate for the scope of work
7. **Protection:**
   a. Roof Protection Plan (required for any work on the finished roof)
   b. Floor Protection Plan (required for any work on the finished floor, or concrete floor for staining materials)
8. **Warranty & Liability**
   a. List warranties for all products installed including duration of warranty and any special instructions, restrictions, or limitations.
9. **Partnering with Pepper's Quality Program**
   a. Pepper's Quality Commitment Letter signed by Company Officer (include copy in the Quality Plan)
   b. Top 3-5 quality concerns specific to the Trade Partner's scope on this project (i.e., What could go wrong?)

BUILDING QUALITY AT EVERY LEVEL

Quality Requirements:

1. ***Trade Partner Quality Plan***: All Trade Partners awarded subcontract agreements shall prepare and submit a Job Specific Quality Plan (JSQP). The Trade Partner JSQP shall follow the Trade Partner Quality Plan Guidelines and will be submitted to Pepper as a submittal for approval prior to starting work. The Trade Partner JSQP will be reviewed and approved by the Pepper Quality Department and the Trade Partner will be required to make revisions as necessary until the document meets the Trade Partner Quality Plan Guidelines.
2. ***Trade Partner Quality Commitment Letter***: All Trade Partners awarded subcontract agreements shall have a company officer sign the Trade Partner Quality Commitment Letter.
3. ***Building Enclosure Coordination Meeting***: Pepper Construction leads the building enclosure coordination meeting in an effort compile the expertise of all parties with the goal of reducing field conflicts and warranty claims due to material compatibility, incomplete details, and construction sequencing. This meeting lasts approximately six hours (including lunch) and the Architect is invited to attend. Trade Partners required to attend this meeting include trades with the following scopes of work: CFMF & exterior sheathing, air-vapor barrier, waterproofing, exterior insulation, roofing, curtainwall & windows, and all building skin trades (masonry, EIFS, metal panels, tile, etc.). Pepper's Project Manager will follow up with trades and design team to ensure comments are incorporated into contract documents.
4. ***Preinstallation Meeting:*** Pepper will lead a preinstallation meeting with each Trade Partner prior to starting work. The Trade Partner Project Manager and Foreman (on site) is required to attend this meeting. During this meeting, the team reviews the scope of work, submittals, plans, specifications, manufacturer's requirements, Trade Partner Quality Plan, and lessons learned as applicable. Note that the preinstallation meeting is by scope, not necessarily trade partner (some trade partners will have multiple preinstallation meetings). Preinstallation meetings last approximately one to three hours depending on the complexity of the scope of work.
5. ***Quality Site Visits and Quality Report*****:** The Pepper Quality Department conducts routine site visits review work-in-place for conformance with the plans, specifications, submittals, manufacturer's requirements, and industry standards. Following the site visit, the Pepper Quality Department produces the Quality Report that documents conformance and non-conformance items identified during the site visit. Pepper's Project Team distributes the report to trade partners via email. Timely response to reports is critical to resolving issues quickly before they are covered up. If defects or deficiencies are discovered, Trade Partners are required to provide an initial assessment of the defects/deficiencies within two (2) days, and within seven (7) days Trade Partners shall implement a plan to correct the defects/deficiencies. Trade Partners shall provide photo documentation of the defect/deficiency repair to Pepper. Trade Partners that repeat issues or otherwise demonstrate a lack of expertise or understanding, will be required to participate in any training deemed necessary by Pepper's Director of Quality Management to bring the Trade Partner expertise to a level that will enable them to comply.

Pepper Construction
Tomorrow Transformed

Trade Partner Quality Commitment Letter

Pepper Construction is building a culture of quality where project teams and trade partners take ownership of the work and build it right the first time. To take our quality culture to the next level, we are asking our Trade Partners to sign this letter to demonstrate their commitment to Quality.

As a Trade Partner of Pepper Construction, we agree to the following Quality Commitments:

1. We will create and abide by a Job Specific Quality Plan (JSQP) following Pepper's *Trade Partner Quality Plan Guidelines*.
2. We will partner with Pepper to prevent deficiencies through pre-construction coordination including preinstallation meetings, sequencing meetings, building envelope coordination meetings, and MEP coordination as appropriate for our scope of work.
3. We will verify that all components of our work comply with the Contract Documents including applicable building codes, manufacturer's requirements and industry standards. We will request written clarification from Pepper before proceeding to install a product if the manufacturer's instructions or building code conflict with the Contract Documents.
4. Prior to installation, we will verify that existing conditions and field measurements match shop drawings, models developed during BIM coordination, contract documents and manufacturer requirements. We will provide written notification to Pepper of any discrepancies.
5. We will coordinate our work with Pepper Construction's project team and other trade partners to properly sequence the work, reduce field conflicts, and avoid rework.
6. We will train and empower our employees and second-tier trade partners to say something or stop work if they see defective work being installed. We acknowledge that it is our obligation to assure that our second-tier trade partners understand and comply with these quality commitments.
7. We will inspect 100% of our installed work as the *Quality Control* portion of our JSQP. We understand that Pepper's *Quality Assurance* site visits are only a spot check and cannot be relied upon to identify all our deficiencies.
8. If defects or deficiencies are discovered, we will provide an initial assessment of the defects/deficiencies within two (2) days, and within seven (7) days we will implement a plan to correct the defects/deficiencies. We will provide photo documentation of the defect/deficiency repair to Pepper. If we repeat issues or otherwise demonstrate a lack of expertise or understanding, we will participate in any training deemed necessary by Pepper's Director of Quality Management to bring our company to a level that will enable us to comply.
9. We acknowledge that the Indiana Statute of Repose for construction is 10 years from the date of substantial completion. If defects are discovered during the warranty period or the statute of repose, we will partner with Pepper to promptly investigate and provide repair options to the owner.

Project Name: _____

Trade Partner Company Name: _____

Company Officer Printed Name: _____

Company Officer Signature: _____

Date: _____

BUILDING
QUALITY
AT EVERY LEVEL

BIM TRADE COORDINATION PROTOCOL

Pepper Construction
Tomorrow Transformed

Trade Coordination Protocol Document

Version 1
All
Trades

A. Introduction

Trade partners outlined in this document will participate in a coordination process using 3D modeling. This effort will be a collaborative process in which this team will coordinate their work while generating shop drawings in a three-dimensional virtual environment. This document outlines the process that will be used for coordination of on this project including file requirements, meetings, schedule, coordination areas, and project deliverables.

B. Model Requirements

1. Requirements of all models

This section describes the models that will be generated for trade coordination throughout the course of the project. The design team will provide models to be used as a reference, but the trade partners are expected to provide the model(s) for the scopes of work for which they are contracted to perform, unless specifically noted in this document. The table below outlines the minimum requirements for models to be used in coordination. Any elements not included in the model will be the responsibility of the trade partner to coordinate with other trade partners. Any elements intended to be prefabricated shall be modeled to reflect the prefabricated component including any supports, framing, bracing, etc. that will be installed along with the prefabricated component. 3D Modeling for each trade shall generally include, but not necessarily be limited to the items listed in the table below for each of the planned models as part of the scope of work for each trade. Each of the trade partners is responsible for making sure that the contents of the model represent a complete system and that tolerance for system access and maintenance along with insulation are included where appropriate. If there is any confusion about the requirements in the tables below, please contact the project model manager.

All coordination models must be model to a minimum **L**evel **O**f **D**evelopment 350 standards unless noted otherwise. Which states "The Model Element is graphically represented within the Model as a specific system, object, or assembly in terms of quantity, size, shape, orientation, and interfaces with other building systems".

If you would like more info on LOD please visit http://bimforum.org/lod/

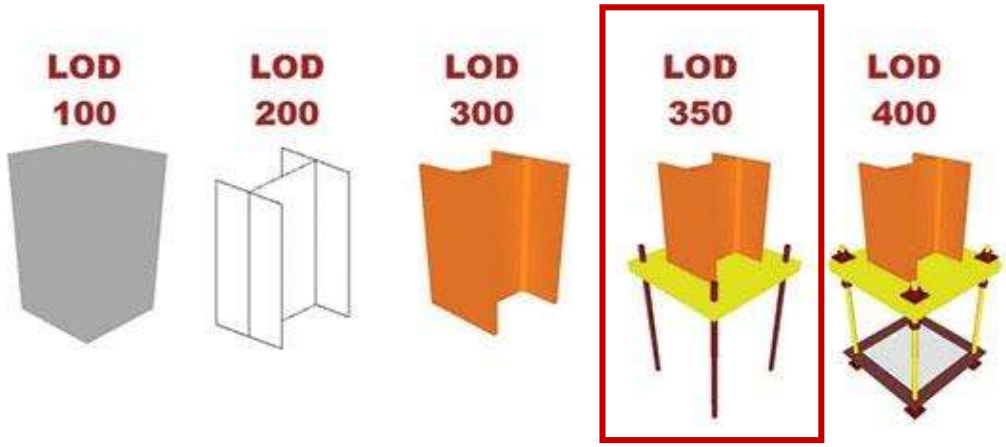

2. Required Models and Responsibility

Model Name	File Name Abbrev.	Model Content	Authoring Company	Required Authoring Tool
Design Models				
Revit File Name Format Example: *2024022_STRUCT_V24.rvt*				
Navisworks File Name Format Example: *BCSC_D_Mech.nwc*				
Architectural Model	ARCH	Design intent model for architectural building components. This model is available for reference. Not all components may be shown.	**CSO**	**Revit 2024**

Structural Model	STRUCT	Design intent model for structural steel and concrete building components. This model is available for reference. Not all components may be shown.	**LHB**	**Revit 2024**
Mechanical, Electrical, Plumbing	MEP	Design intent mechanical, electrical and plumbing model. This model is available for reference. Not all components may be shown.	**RE Diamond**	**Revit 2024**
Furniture	FURNITURE	Design intent electrical. This model is available for reference. Not all components may be shown.	**CSO**	**Revit 2024**
Food Service	FOOD	Design intent food service. This model is available for reference. Not all components may be shown	**CSO**	**Revit 2024**
Telecom Model	TECH	Design intent telecom model. This model is available for reference. Not all components may be shown.	**RE Diamond**	**Revit 2024**
Trade Partner Models				
Revit File Name Format Example: *BCSC_C_MECH.rvt*				
Navisworks File Name Format Example: *BCSC_C_MECH.nwc*				
Steel Model	STEEL	Coordination, fabrication, and installation model consisting of steel columns, framing, bracing, stairs, and new structural supports as outlined in the Discipline Specific Model Requirements.	**Structural Steel Fabricator**	**.ifc**
Concrete Model	CONC	Coordination model consisting of foundations, cast-in-place walls, and sheer walls as outlined in the Discipline Specific Model Requirements.	**Concrete Trade Partner**	**Revit 2024**
Precast Model	PRECAST	Coordination, fabrication, and installation model consisting of all precast components as outlined in the Discipline Specific Model Requirements.	**Precast Trade Partner**	**Revit 2024**
Plumbing Model	PLUMB	Coordination, fabrication, and installation model consisting of plumbing piping, systems, fixtures, equipment, and other components as outlined in the Discipline Specific Model Requirements.	**Plumbing Trade Partner**	**Revit 2024**
Mechanical Piping Model	MP	Coordination, fabrication, and installation model consisting of mechanical piping, systems, equipment and other components as outlined in the Discipline Specific Model Requirements.	**Mechanical Piping Trade Partner**	**Revit 2024**
Electrical Model	ELEC	Coordination, fabrication, and installation model consisting of electrical systems, conduit, cable tray, light fixtures, equipment, and other components as outlined in the Discipline Specific Model Requirements.	**Electrical Trade Partner**	**Revit 2024**
Technology Model	TECH	Coordination, fabrication, and installation model consisting of technology systems, conduit, cable tray, equipment and other components as outlined in the Discipline Specific Model Requirements.	**Technology Trade Partner**	**Revit 2024**
HVAC Model	HVAC	Coordination, fabrication, and installation model consisting of ductwork, equipment and other components as outlined in Discipline Specific Model Requirements.	**HVAC Trade Partner**	**Revit 2024**
Framing Model	FRAME	Coordination and installation model consisting of framing components as outlined in the Discipline Specific Model Requirements.	**Framing Trade Partner**	**Revit 2024**
Supplemental Model	SUPP	This model will include any additional model geometry needed for overhead coordination that is not being modeled by the design team or any trade partners.	**Pepper Construction**	**Revit 2024**
Site Utilities	SITE	This model will contain existing and new site utilities that are part of the site / civil trade partner's scope of work and are outside of the building footprint.	**Pepper Construction**	**Revit 2024**

3. Discipline-Specific Model Requirements

The Model Element table below reflects **project specific requirements** of what is to be modeled.

Model Name	Component	LOD	File Name Abbrev.
Trade Partner Models			
Steel Model			
	Steel Framing	350	Model all columns, beams, trusses, and joist framing. Include anchor bolt locations. Include slopes on framing members as noted on contract documents. Model all pipe arbors and associated foundations.
	Bracing	350	Model all connections and additional bracing including k-braces and gussets plates.
	Dunnage Steel and Grating	300	Model all dunnage steel and grating to accurate size and location. Include accurate size and locations for grating openings.
	Stairs	300	Treads, risers, landings, and support structure associated with stairs
	Additional Steel	350	Include all angles, channels, plates, and structural elements required to frame around openings or support equipment
Concrete Model			
	Foundations	300	All perimeter foundations, pad footings, grade beams, concrete walls required to be modeled to accurate dimensions and locations. Reinforcement is not required to be modeled. Sleeve locations shall be provided by the MEP trade partners as needed and incorporated into the concrete model for coordination/validation prior to installation.
	Walls	300	All sheer walls, concrete shaft walls, and cast-in-place walls etc. shall be modeled to accurate dimensions and locations. Reinforcement is not required to be modeled. Sleeve locations shall be provided by the MEP trade partners as needed and incorporated into the concrete model for coordination/validation prior to installation. Embed locations shall be modeled and coordinated with steel fabrication model and other trades as needed.
	Anchor Bolts	350	All anchor bolts to accurate size and location based on understanding of anchor bolt locations from anchor bolt shop drawings. This model will be overlaid with steel fabrication model to ensure anchor bolt locations are coordinated.
Precast Model			
	Walls	300	All precast walls shall be modeled to accurate size and dimension with accurate embed sizes and locations.
	Deadmen	300	All precast deadmen shall be modeled to accurate size and location.
	Bracing	300	All temporary precast bracing shall be modeled to accurate size and location.
	Openings	300	All openings for architectural, structural, or MEP systems to accurate size and location.
	Reinforcement	350	All reinforcement including but not limited to rebar, strands and embeds.
Plumbing Model			
	Piping and Components	350	All piping is required to be modeled regardless of size including, vent, sanitary, storm, and domestic water. Leak detection systems requiring access are required to be modeled at minimum with a no-fly zone. Piping that requires slope should be modeled with slope according to project specifications. If double containment systems are required, they are required to be modeled to correct outside diameter. This shall include all underground systems and utilities that run underground from point of service to the building.
	Underground Piping	350	Modeling of all underground piping that is directly buried or within a tunnel. Coordinate elevations with any tie-ins to existing and other systems that are routed underground. Modeled piping outside diameter should match submittal data including insulation and outer jacket. Underground piping for sanitary and storm systems should include cleanout locations coordinated with architectural and equipment layout for the floor above.
	In-wall Piping	350	Modeling of all in-wall piping, including coordination with stud framing and other in-wall systems or components such as blocking. Model should include means of support as needed to secure piping within the wall cavity. Carriers for toilets and sinks are required to be included. Outlets for medical gas connections are required to be modeled. Surface mounted piping and connections are required to be modeled.

	System Designation	350	Piping modeled is required to be designated by system type either by workset or layer. Piping designations should be represented within the file and each component modeled should have that designation included as part of the geometry
	Insulation	350	Insulation is required to be modeled in accordance with project specifications, by system type and pipe diameter.
	Hangers and Supports	350	Hangers and supports for piping components are required to be modeled including roller hangers, guides, and seismic bracing. All supports that need to trapeze other trade partners shall be modeled, including Unistrut, angle, or channel supports. Where supplemental steel is needed to span between structural members (for instance at a roof deck that isn't poured), those supplemental steel members are required to be modeled. Coordinate hanging locations with structural requirements. Where systems are suspended from a prefabricated rack or part of a prefabricated assembly, the trade partner responsible for the system (not the prefabricated rack) is required to model the hangers for their system.
	Valves and Components	350	All valves are required to be modeled. At each valve location where there is a valve, no-fly zones should be represented for clearance and to access the valve and turn the handle. No-fly zones should extend to below the ceiling elevation where they are concealed above finished ceilings.
	Equipment	350	Models should include pumps, water softeners, water heaters, expansion tanks and pressure vessels, and backflow preventers according to actual size per approved submittals. Models should be provided by manufacturer if available. Include no-fly zones as needed to access and maintain equipment. Any structure, slabs, or pads required for equipment shall be modeled to correct size and location.
	Fixtures	350	Plumbing fixtures are required to be modeled according to actual fixtures submitted. Include sinks, toilets, drinking fountains, eyewash stations and other fixtures as noted on the contract documents. Model and connect plumbing piping to each fixture, including in walls. Model carriers in walls for toilets and verify wall depth dimensions will allow for proper installation
Mechanical Piping Model			
	Piping and Components	350	All piping is required to be modeled regardless of size including, chilled water, heating water, steam, condensate, and natural gas. Leak detection systems requiring access are required to be modeled at minimum with a no-fly zone. Piping that requires slope should be modeled with slope according to project specifications. If double containment systems are required, they are required to be modeled to correct outside diameter. This shall include all underground systems and utilities that run underground from point of service to the building.
	Underground Piping	350	Modeling of all underground piping that is directly buried or within a tunnel is required. Coordinate elevations with any tie-ins to existing and other systems that are routed underground. Modeled piping outside diameter should match submittal data including insulation and outer jacket. This shall include all underground systems and utilities that run underground from point of service to the building.
	In-wall Piping	350	Modeling of all in-wall piping, including coordination with stud framing and other in-wall systems or components such as blocking. Model should include means of support as needed to secure piping within the wall cavity
	System Designation	350	Piping modeled is required to be designated by system type either by workset or layer. Piping designations should be represented within the file and each component modeled should have that designation included as part of the geometry
	Insulation	350	Insulation is required to be modeled in accordance with project specifications, by system type and pipe diameter.
	Hangers and Supports	350	Hangers and supports for piping components are required to be modeled including roller hangers, guides, and seismic bracing. All supports that need to trapeze other trade partners shall be modeled, including Unistrut, angle, or channel supports. Where supplemental steel is needed to span between structural members (for instance at a roof deck that isn't poured), those supplemental steel members are required to be modeled. Coordinate hanging locations with structural requirements. Where systems are suspended from a prefabricated rack or part of a prefabricated assembly, the trade partner responsible for the system (not the prefabricated rack) is required to model the hangers for their system.
	Valves and Components	350	All valves are required to be modeled. At each valve location where there is a valve, no-fly zones should be represented for clearance and to access the valve and turn the handle. No-fly zones should extend to below the ceiling elevation where they are concealed above finished ceilings. At steam PRV locations, model piping to represent actual installed length of assembly. Valve and strainer assemblies for VAV box locations don't need to be modeled, but should account for access during the coordination process
	Mechanical and Plumbing Equipment	350	Chillers, boilers, expansion tanks, cooling towers, condensate receivers, condensers, compressors, heat exchangers, Chilled beam units, VRF, unit heaters, fan coil units, and humidifiers, and blower coil units and all other equipment as a part of this scope…Equipment models should represent actual size of equipment and correct locations for system connections. No-fly zones for areas that require access for installation or maintenance are required to be modeled. Any structure, slabs, or pads required for equipment shall be modeled to correct size and location.
	Slab Penetrations	350	All slab penetrations shall be modeled to accurate size and location. This information shall be utilized to place sleeves in the concrete slab prior to concrete pour where applicable.
	Wall Penetrations	350	All wall penetrations shall be modeled to accurate size and location. This information shall be utilized to place sleeves in precast panels or concrete cast-in-place walls prior to concrete pour where applicable.
Electrical Model			

	Power Distribution	350	Modeling of all distribution equipment is required, including but not limited to electrical panels, distribution switchgear, transformers, ATS, etc… Include no fly-zones to represent areas where other trade partners cannot be routed (ie. Overhead 6' clear of panels and in front 3' of panels). Equipment that is modeled should be based on actual size of equipment that will be installed. Any system(s) designed to extend beyond the building line are to be modeled up to the connection point indicated in the Contract Documents or 5'-0" outside the building perimeter if information is not indicated. This shall include all underground systems. Any structure, slabs, or pads required for equipment shall be modeled to correct size and location.
	Emergency Generators	350	Model all components of emergency generators including day tanks. Models should be provided by manufacturer if available. Include no-fly zones as needed to access and maintain equipment. Provide cut sheets and shop drawings to other trade partners to provide models of duct and piping connections, for example exhaust and muffler/silencer duct components and fuel piping connections. Any structure, slabs, or pads required for equipment shall be modeled to correct size and location.
	Conduit	400	Model all conduit that is 1" or larger or shares a rack with other conduit. Conduit should be modeled from the point of distribution to the home run box with all pull boxes / condolets modeled per specified requirements. Conduit that is in a rack should be modeled as conduit and NOT as a generic shape. Any supports or hangers associated with the conduit rack shall be modeled accurately.
	Bus Duct	350	Model all bus duct regardless of size. Include no-fly zones as needed to access and maintain bus duct.
	In-wall Electrical	350	In wall electrical conduits greater than 1/2" and raceways shall be modeled.
	Hangers and Supports	350	Hangers and supports for all elements above are required to be modeled and will be coordinated in federated model in all areas. Model all seismic bracing as required by specifications and according to seismic zone definitions outlined in project plans and specs. Model any additional Unistrut required for connection to structure. Coordinate hanging locations with structural requirements. Where systems are suspended from a prefabricated rack or part of a prefabricated assembly, the trade partner responsible for the system (not the prefabricated rack) is required to model the hangers for their system.
	Cable Tray	350	Model all cable tray and low voltage raceways. Cable tray should include an area that represents a no-fly zone for access to the tray for pulling wire. Supports for the cable tray should be included in the model. Areas where cable tray passes over inaccessible ceilings should be reviewed with the design team and may require equivalent conduit in lieu of tray.
	Lighting	350	Light fixtures to be modeled with appropriate clearance height dimensions above the ceiling as required to access and maintain each type of light fixture. Include no-fly zones as needed to access and maintain fixtures.
	Temporary Lighting	350	All temporary lighting fixtures shall be modeled in-place and incorporated in the federated model as a part of the coordination process. The trade partner responsible for temporary lighting shall install temporary lighting fixtures per the coordinated model.
	Slab Penetrations	350	All slab penetrations shall be modeled to accurate size and location. This information shall be utilized to place sleeves in the concrete slab prior to concrete pour where applicable.
	Access Zones	350	Model an access zone for ALL locations in which access is required. This includes but is not limited to the following: pull boxes, junction boxes, condolets, etc…) The access zones shall be models in such a way as to facilitate the coordination of other systems around the necessary zones.
Technology Model			
	Equipment	350	All equipment including hangers, access, structural supports, maintenance clearance shall be modeled. Any structure, slabs, or pads required for equipment shall be modeled to correct size and location.
	Conduit	400	Model all conduit that is 1" or larger or shares a rack with other conduit. Conduit should be modeled from the point of distribution to the home run box with all pull boxes / condolets modeled per specified requirements. Conduit that is in a rack should be modeled as conduit and NOT as a generic shape. Any supports or hangers associated with the conduit rack shall be modeled accurately.
	Hangers and Supports	350	Hangers and supports for all elements above are required to be modeled and will be coordinated in federated model in all areas. Model all seismic bracing as required by specifications and according to seismic zone definitions outlined in project plans and specs. Model any additional Unistrut required for connection to structure. Coordinate hanging locations with structural requirements. Where systems are suspended from a prefabricated rack or part of a prefabricated assembly, the trade partner responsible for the system (not the prefabricated rack) is required to model the hangers for their system.
	Cable Tray	350	Model all cable tray and low voltage raceways. Cable tray should include an area that represents a no-fly zone for access to the tray for pulling wire. Supports for the cable tray should be included in the model. Areas where cable tray passes over inaccessible ceilings should be reviewed with the design team and may require equivalent conduit in lieu of tray.
	In-wall Technology	350	In wall electrical conduits greater than 1/2" and raceways shall be modeled.
	Slab Penetrations	350	All slab penetrations shall be modeled to accurate size and location. This information shall be utilized to place sleeves in the concrete slab prior to concrete pour where applicable.
HVAC Model			

	Ductwork	350	All ductwork is required to be modeled including metal ducts, flexible ducts, and fabric duct systems. Low exhaust and return that is located within a chase wall is required to be modeled. Insulation is required to be modeled on ductwork and shall be accounted for in coordination. Ductwork requiring slope shall be modeled as specified and/or per SMACNA requirements. Coordinate all termination locations with equipment.
	Equipment	350	Model all equipment being provided including fans, terminal boxes, fan coil units, etc… If another trade partner is providing equipment, but duct is connecting to it, the sheet metal trade partner should include modeling of that equipment and/or locating and coordinating it with structure and other disciplines. If available, equipment models should be provided by the manufacturer to ensure connections are in the proper location. For AHU's and RTU's. all door swings and coil access areas should be modeled as a no-fly zone to block out that area during the coordination process. VAV, CAV and air valves shall include no-fly zones as needed to properly access and maintain the equipment. No-fly zones should extend to finished floor for coordination with casework and other building elements. Any structure, slabs, or pads required for equipment shall be modeled to correct size and location.
	Terminal Devices	350	Model all grilles, registers, and diffusers. Model components used in coordination should be based on the approved submittal. Architectural reflected ceiling drawings shall be used as the basis for grille, register, and diffuser locations unless otherwise directed. Locations where rated grilles are needed should be coordinated with architectural drawings. The HVAC Ductwork trade partner shall review locations where other systems are routed to confirm that connections at the neck of a diffuser or grille is feasible and doesn't restrict airflow. Avoid short-circuit of airflow by locating diffusers for supply away from exhaust and return grilles.
	Fire and Smoke Dampers	350	Dampers shall include no-fly zones as needed for proper access for inspection and maintenance. It is trade partner's responsibility to coordinate all damper locations with rated assemblies. No-fly zones should extend to finished floor where applicable for coordination with casework and other building elements. Locations with actuators should include a no-fly zone to confirm the motor is accessible and that the full stroke of the actuator doesn't conflict with another trade.
	Duct Access Doors	350	Model a no-fly zone in areas where duct access doors will be located. Locate doors in areas that are easily accessed without removal of lights or other systems.
	Hoods	350	Model all hoods. Cut sheets (pdf) of hoods provided by others will be provided. Modeling and coordination of the hood should be included as part of the sheet metal trade partner's scope.
	Plenums and Louvers	350	Model all outdoor air and relief/exhaust air plenums per specifications for wall thickness requirements. Plenums should include access for door swing if applicable and connections to louver should be coordinated with architectural drawings. Models of louvers should be coordinated with exterior elevation drawings and validate that free air requirements are achievable. Model all components requiring access for maintenance (motors and actuators) including no-fly zones. Coordinate framed openings with structure and architecture and confirm mounting requirements for louvers do not require additional support.
	Hangers and Supports	350	Hangers and supports for all duct and equipment above are required to be modeled. Model all curb supports for coordination with structural framing and openings for duct connections to the equipment. Include modeling of supports for vertical risers in shafts and coordinate support locations with other trade partners that are also located in and around the shaft. Model all seismic bracing as required by specifications and according to seismic zone definitions outlined in project plans and specs. Model any additional Unistrut required for connection to structure. Coordinate hanging locations with structural requirements. Where systems are suspended from a prefabricated rack or part of a prefabricated assembly, the trade partner responsible for the system (not the prefabricated rack) is required to model the hangers for their system.
	Slab Penetrations	350	All slab penetrations shall be modeled to accurate size and location. This information shall be utilized to place sleeves in the concrete slab prior to concrete pour where applicable.
	Framing Members	350	Model all racking components to accurate size and location.
	Hangers and Supports	350	Hangers and supports for all racking systems are required to be modeled. Model all seismic bracing as required by specifications and according to seismic zone definitions outlined in project plans and specs. Coordinate hanging locations with structural requirements.
Framing Model			
	Kingstuds and Corner Studs	350	Model all kingstuds at door frames to represent locations where routing of overhead systems should be avoided. Model all corner studs where stud location is critical to ensure wall framing integrity. Where a header or bracing is needed at these locations, if a conflict is unavoidable, model the header at an elevation where it will be installed without conflicting with another trade.
	Top of Wall	350	Model should be created for top of wall conditions to ensure proper rating can be achieved and MEP systems are not conflicting with this system.
	Bulkhead Framing	350	Model all bulkhead shapes as needed to coordinate with other trade partners. Vertical stud framing and kickers need to be represented to ensure that MEP trade partners are located in a way that allows for the proper support of the bulkhead. Coordination of bulkhead framing with MEP trade partners should be included as part of the modeling and coordination process
	Exterior Framing Kickers	350	All framing that extends into the building and is above the ceiling is required to be modeled with accurate stud/track sizes, dimensions, straps, bracing, etc. The kicker angle shall be consistent with how it will be installed in the field.

	Bottom of Shaft Enclosures	300	Model bottom of shaft enclosure with the appropriate thickness that represents the framing and drywall to be installed.
Supplemental Model			
	Supplemental Components	300	Model any building elements required for spatial MEP Coordination
Site Utilities Model			
	Site Utilities	350	Model all new and existing site utility piping and elements at accurate size and location
	Site Structures and Manholes	350	Model all new and existing site utility structures and manholes at accurate size and location

C. Process Overview

1. Develop Preliminary Shop Drawings / 3D Models

Each participating trade partner will be required to develop design / coordination drawings by creating a 3D model which includes all system components respective to their scope of work. Trade partners shall provide this 3D model, with contents as outlined in this document for use in coordination.

2. Assemble Federated Model and Begin Clash Detection

Pepper Construction Company (Pepper) will integrate the architectural, MEP, and any other required models into a federated 3D model for design review and clash detection. Each firm should post their respective files regularly and should review the federated model for conformance to design specifications. Pepper will regularly perform clash detection and post the latest .nwf/.nwd model to the project file sharing site.

The following hierarchy will be used as a general standard for resolving clashes:

Priority	Building Systems
1	Structural / Architectural Components
2	Owner Equipment and Required Clearances
3	MEP Equipment
4	Sheet Metal Ductwork and Gravity Piping
5	Pressurized Piping, Fire Protection Branch Piping, Electrical Conduit

3. Collaboration with Design Team

The coordination team will meet regularly either in person or via web conference as necessary. These meetings will be to review the conflicts within the model between trade partners and to address design, constructability, and coordination issues. If the process of coordination necessitates a request for changing or altering the design, those changes must be documented through the project RFI process. Additional meetings with the design team may be scheduled to help facilitate and expedite a resolution.

While Pepper will convert architectural models into Navisworks format as changes are made available, it is each trade partner's responsibility to review conflicts identified through the coordination process with the most current contract documents to ensure that conflicts correlate with most current designed conditions.

4. Involve Field Personnel

Field personnel from each firm will need to review the model and design documents to provide feedback and further ensure constructability prior to signoff in an area.

5. Signoff

Following the completion of coordination of a floor or defined coordination area, the team will engage in a signoff process where each firm acknowledges and agrees to their final layout and location of systems. This model will be the basis for installation. The team will signoff on a coordinated NWD model that will be posted to the project collaboration site.

6. Post Signoff Modeling and Coordination Requirements

Immediately following signoff and as outlined in the coordination schedule, trade partners shall create shop drawings for submission to Pepper and the design team. Shop drawings must follow specified requirements and specs for the project. If no requirements provided, shop drawings must depict all components associated with the coordinated system. At minimum, shop drawings should show structural grid, architectural floor plan or RCP background, system components, dimensions off of structural grid and elevations required for field installation, maintenance and system clearances, system and equipment tags. Any fabrication or installation done prior to receiving shop drawing approval from Pepper and the design team is done at the risk of the trade partner.

It is the responsibility of the trade partner to ensure that all model content represents the systems and equipment that are going to be installed. If, at the time of signoff, model geometry does not represent what is going to be installed, the trade partner must notify Pepper at time of signoff. It will be the responsibility of the trade partner to update their model to reflect systems and equipment that are going to be installed and to notify Pepper of any coordination discrepancies immediately.

D. Coordination Requirements

1. Trade partners shall show all of their respective system components and/or equipment in their 3D models. MEP building elements that are modeled shall take precedence over MEP building elements that are not modeled. MEP building elements that are not modeled shall be installed in such a way that they create no conflict or installation issues with modeled MEP building elements. Resolution of any issues that arise in the field as a result of the installation of non-modeled MEP building elements shall be the responsibility of the trade partner who installed the non-modeled element.
2. Trade partners are required to review their respective model content and ensure there are no conflicts with structural model elements prior to initial submission to Pepper for inclusion in the federated model (i.e. clear all beams, columns and other structural components) maintaining all required vertical and horizontal clearances, as specified.
3. Any system components or attributes appearing on contract documents but not included in the model will be the trade partner's responsibility to coordinate in the field.
4. It is each trade partner's responsibility to coordinate their work in accordance with the contract documents. At any point there is a discrepancy between the model and the contract documents, the contract documents shall take precedence. Design models may be provided to the trade partners as a reference but do not take precedence over the contract documents.
5. Model elements included in trade partner models shall consider all future installations of building systems in the routing and placement of systems and components associated with their scope of work in coordination.
6. All model elements should have a parameter that indicates which "phase" of the project that system or element will be installed.
7. The BIM coordination process requires trade partners to submit models that represent a complete model of their respective trade and do not degrade the design intent or performance of building systems.
8. Each trade partner shall anticipate the interrelationship of trade partners and other trade partners so work can be performed in manner that minimizes interference with respect to system layout and sequencing of activities.
9. Each contractor may be required by Pepper supervision to provide layout information in the field pertinent to their trade to help facilitate the layout and construction of other trades in the field.
10. The BIM Coordination process shall not be the basis for contract adjustment or change order.
11. It is the responsibility of each trade partner to coordinate connections to all building equipment.
12. All additional quantities of material beyond what is inferred on the drawings that is required to complete work in place is part of the trade partner's bid price and contract.
13. During the construction of the project, there may be requirements to make field modifications of building systems being installed. These modifications shall be updated in the model within (14) days of the field modification. The trade partner shall immediately notify Pepper Construction in writing that an adjustment has been made.
14. Trade partners are expected to complete BIM Coordination in accordance with the overall project schedule and allocate resources as needed to comply with work activities as required to execute the work.
15. Trade partners are expected to attend 3D trade coordination meetings per the table below at a minimum.

Trade	Kickoff Meeting			Regular Coordination Meetings			As Needed Meetings			Sign Off and Field Review Meetings		
Personnel	**BIM**	**PM**	**FIELD**	**BIM**	**PM**	**FIELD**	**BIM**	**PM**	**FIELD**	**BIM**	**PM**	**FIELD**

Trade Partners												
Structural Steel Fabricator							X	X	X			
Concrete Trade Partner							X	X	X			
Precast Trade Partner							X	X	X			
HVAC Trade Partner	X	X		X			X	X	X	X	X	X
Mechanical Piping Trade Partner	X	X		X			X	X	X	X	X	X
Plumbing Trade Partner	X	X		X			X	X	X	X	X	X
Electrical Trade Partner	X	X		X			X	X	X	X	X	X
Telecom Trade Partner	X	X		X			X	X	X	X	X	X
Fire Protection Trade Partner	X	X		X			X	X	X	X	X	X
Framing Trade Partner	X	X		X	X		X	X	X	x	X	X
Technology Trade Partner	X	X		X			X	X	X	X	X	X

E. Resources and Support

1. Pepper will provide a Project Model Manager to the project. The Project Model Manager will be responsible for compiling the federated model, performing clash detection, compiling clash reports, and facilitating the coordination meetings. The Project Model Manager will be the coordination team's liaison with the design team in communicating issues that require design team input. The Project Model Manager will have the following responsibilities.

Task
Compile Federated Model
Share Design Team Revit Models
Model Manager to facilitate model during coordination, including clash detection
Management of overall coordination and schedule
Facilitate sign-off process

F. Requirements for 3D Models and File Uploads

1. General Requirements

The files submitted to Pepper need to be in a format that can be opened and displayed in Autodesk® Navisworks 2021. Please refer to the Supported File Formats and Applications area on Autodesk's® website for a complete listing of the various formats that are supported by Navisworks.

Revit models must be version 2021 unless otherwise approved. No one shall upgrade to a new version of Revit without the approval of all team members at the direction of Pepper.

The 3D models have to consist of 3D solids (not lines or wire frames) that represent the actual dimensions of the building elements and the equipment that will be installed on the project. Reasonable abstractions can be made, but have to be coordinated. The abstractions have to allow meaningful coordination and clash detection. The global coordinate system of the submitted files has to follow the coordinate system used by the architect.

In general, the following model structure and features will be required:

1. One native file and one .nwc file per trade per area.
2. Each trade partner may choose layer names. The layers have to structure the scope of the work in a meaningful way. (i.e. Supply, Return, Hangers all on separate layers)
3. The geometry of identical 3D elements contained in different files has to agree when the elements of the different files are superimposed.

4. Colors, file naming, and layer naming have to remain consistent.
5. Elements of the building must be represented in only one file. There must be no overlap of elements of different files.
6. Trade partners will be responsible to provide appropriate object enablers to Pepper for viewing of the trade partner's models in their native drawing format.
7. All parties shall provide models with a scope representing a level of detail greater than or equal to what is typically drawn on 2D plans. Greater level of detail may be needed to include all the required model elements. Refer to the Discipline Specific Model Requirements section.

Pepper will archive the coordination progress by posting .NWD files to the Project Collaboration Site for the team to review. These files are viewable with Navisworks Freedom. This application is free to download from the Autodesk® website. http://usa.autodesk.com.

2. File Upload Requirements

1. Prior to first upload, files should be pre-coordinated for same system clashes, structural steel clashes, and clearances above ceilings.
2. Each trade partner is responsible to elevate their models to the correct elevation defined as the Model Reference Point.
3. Clean drawings in the following ways:
   a. Hide text
   b. Remove any 2D lines
   c. Remove all X-References
   d. Purge all model content loaded into the file that is not being used or referenced
4. Post both native and .NWC files to the Project Collaboration Site, at a minimum, 4 hours before the scheduled coordination meeting time. Timing will be established by Model Manager after each meeting.
5. Access spaces required by codes and for maintenance should be represented as objects in a model. The objects representing access spaces should be on separate layers for each system.

G. Project Collaboration Site

1. Autodesk Construction Cloud (ACC) will be Pepper's collaboration solution for managing documents, data, and design information with distributed teams. Once the project's team members are setup in the system a notification will be sent with login credentials and information on accessing this site.
2. All Navisworks file sharing will be done via ACC. One representative per discipline will be provided access to the site, more can be added as necessary.

H. Coordination Meetings

1. Preliminary Coordination Meeting

Date:	TBD
Time:	TBD
Location:	TBD

a. Pepper will demonstrate clash detection within Navisworks and its utilization for the project, answer any questions or concerns regarding all aspects of the 3D modeling and coordination process, and make recommendations as needed.

b. Model geometry should be clash free within the same system and with structure and should be located above ceilings and within walls and bulkheads as required. Areas where meeting these constraints are not feasible should be noted by the trade partner and discussed in the meeting.

2. Regular Coordination meetings

Location: Microsoft Teams Meetings

Frequency: Additional coordination meetings will be held as needed at the discretion of the Model Manager in order to meet the coordination schedule and ultimately the overall project schedule. Anticipate anywhere between 2-3 meetings per week as a general rule. Meetings may be held via web and tele-conferencing at the

discretion of the Model Manager. Meetings may also need to be held on site at the discretion of the Model Manager.

I. 3D BIM Coordination Schedule

A specific schedule for 3D BIM coordination will be released in a later version of the Coordination Protocol Document. Coordination will need to be completed in advance of construction commencing and in time for material to be fabricated to meet the project schedule.

J. Digital Deliverable and As-Built Requirements

Project Specific Requirements		Required Y/N	
Trade partners are responsible for providing models that reflect "As-Built" conditions at the completion of the coordination process.			
File Format	Native File (ie. Revit or other software that trade partner used for model creation as outlined in Section 2 above and in the Model Deliverable Matrix.)	Y	
	Navisworks .nwc files	Y	

DOCUMENT 00 72 17 – UUDP (Underground Utility Damage Prevention) AS-BUILT REQUIREMENTS

ALL SUBCONTRACTORS PERFORMING ANY AND ALL UNDERGROUND UTILITY ACTIVITIES MUST FOLLOW THIS DOCUMENT (NO EXCEPTIONS)

1. Documentation of New Utilities
    a. Contractors responsible for the installation of underground utilities on the project shall provide as-built information as outlined below. This information will be utilized to update the 3D model of new utilities to provide an accurate as-built deliverable to the client. Each contractor performing underground utility work is responsible to coordinate providing this information in accordance with the project schedule and ensuring the appropriate information is captured and delivered to Pepper Construction
        i. Newly installed utilities as a part of the contractor's scope of work shall be surveyed prior to backfill of utility as follows
            1. Capture top of utility elevation
            2. Document size of utility at each survey point within the CAD file
            3. Document type of utility
        ii. Utilities shall be surveyed at the following frequency
            1. At the start and end of each utility run
            2. At each change in direction of the utility and/or at each tie in to new or existing structures
            3. At each change in elevation of the utility (excluding changes in elevation due to gravity slope of piping)
        iii. Information shall be provided in a format as follows:
            1. Information can be generated using AutoCAD, Civil 3D, or similar
            2. Information shall be delivered in the .dwg file extension version 2010 or newer
            3. Coordinate System of CAD file to be in accordance with the State Plan Coordinate system.
            4. Points shall be represented by linework in the CAD file as follows
                a. Points shall be represented with physical linework or Civil 3D points
                b. Points shall be shown at the correct "X, Y, Z" location relative to the project's site CAD file provided by the design team and/or Pepper Construction
                c. Points shall be accompanied by a text label/annotation clearly noting elevation of top of utility, size of utility, and type of utility
                d. Points shall be connected by linework to indicate the complete run of the system
            5. Points shall be provided in a .csv file format in PENZD format

IDLE EMISSIONS REDUCTION PLAN

Pepper Construction
Tomorrow Transformed

Exhibit M1
Idle Emissions Reduction Plan

Project Name: _____

PCC Job Number: _____

General Contractor Designated Plan Manager

Name: _____

Phone: _____

Company: _____

Idle Emissions Reduction Intent During Construction

The intent of this Idle Emissions Reduction Plan ("Plan") is to minimize the health and climate impacts to local communities from combustion engine emissions associated with construction activities. This Plan is required to be followed by all subcontractors serving the insert name of project ("Project"). This Plan describes best practices to achieve the following:

- Minimize exposure of combustion engine emissions associated with construction activities to construction workers, the Project, and surrounding communities.
- Prevent air pollutants from migrating into occupied spaces, collecting in building systems and on building materials.

Idle Emissions Reduction General Requirements During Construction

- **Idling Limitations**: Limit unnecessary vehicle and equipment engine idling to no more than 5 minutes indoors and outside to prevent fumes from idling vehicles, equipment, and tools. Signage communicating idling limitations will be placed around the jobsite. Operator communication/education to be included via ToolBox Talks.
- **Prevention of Indoor Air Pollution**: Locate equipment, vehicles, and loading/unloading staging areas away from air intakes or operable openings of adjacent buildings. Locations of equipment staging areas to prevent indoor air pollution will be denoted on the job specific logistics plan.
- **Extreme Weather**: Idling restrictions will be suspended when temperatures fall outside the range of 40 to 80 degrees Fahrenheit.
- **Field office trailers**: Gas powered generators feeding field office trailers are exempt from this plan.

Exhibit M1
Idle Emissions Reduction Plan

Personnel and Responsibilities

The following personnel will have primary responsibility for executing and monitoring the Plan throughout construction. Responsibilities are defined as the following:

General Contractor

- Implement this project specific Plan.
- Work with subcontractors to schedule deliveries to reduce idling of delivery vehicles.
- Work with subcontractors to schedule activities to minimize the use of fuel powered equipment.
- Overall responsibility for the execution of the plan.
- Resolve disputes related to Plan execution and coordination.

Plan Manager

- Inform all construction personnel of the Plan's goals and procedures.
- Provide opportunities for discussion and feedback to ensure that all construction personnel thoroughly understand the intent and detailed procedures of the Plan.
- Regularly tour the jobsite to supervise and ensure Plan compliance.

Subcontractors

- Carry out requirements of the Plan.
- Sequence work and use work methods that conform to the Plan requirements to reduce idling of vehicles and equipment.

Nonroad Diesel Engines

All engines used on the Project jobsite that are 25 horsepower (HP) or greater must meet the USEPA Tier 4 PM emission standard. Compliance may be met with engines certified to meet the applicable USEPA Tier 4 emission standard AND/OR equipment that has been retrofitted with technology verified to reduce particulate emissions to a level at or more stringent than USEPA Tier 4 emission standard. To the extent that retrofits are used to meet this requirement, the diesel retrofit technology used must be listed on the verified technology list for either the USEPA or the California Air Resources Board current as of the time the equipment is first placed on the jobsite and must be installed and operated as designated by that verified list. *Verified Technologies List for Clean Diesel | US EPA*.

ADDENDUM

CSO
ARCHITECTURE · INTERIOR DESIGN

JAMES ROBERT FUNK
REGISTERED
No.
AR00900003
STATE OF
INDIANA
ARCHITECT

ADDENDUM NO: 2

BID PACKAGE NO: All

PROJECT: BCSC Maple Grove Elementary School

PROJECT NO: 2024022 DATE: 06/17/2025 BY: Lauren Maloney

This Addendum is issued in accordance with the provisions of "The General Conditions of the Contract for Construction," Article 1, "Contract Documents" and becomes a part of the Contract Documents as provided therein. This Addendum includes:

Addendum Pages: ADD2-1 – ADD2-24
Attachments: Specifications: 06 40 23, 07 54 19, 08 71 00 (partial), 11 68 00, 23 21 13.33, 26 05 19, 32 33 00, 32 92 00

Revised Sheets: C000, C101, C300, C301, C302, C303, C304, C400, C401, C402, C403, C404, C405, C500, C501, C502, C800, C801, C803, C804, C900, C901, C902, L102, L104, L202, L204, L401, L402, L404, S001, S002, S201A, S201B, S201C, S201D, S202A, S202B, S203C, S203D, S204D, S301, S302, S402, S404, S405, S701, S702, S703, S713, A120, A211B, A211C, A212A, A404, A405, A420, A421, A422, A430, A431, A432, A503, A504, A653, A800, A801D, A802B, P101A, P101B, P101D, P201A, P201B, P201C, P201D, P202B, P202C, P202D, P220, P301, P303, P360, P401, M201A, M202A, M202D, M211A, M211B, M211C, M211D, M212A, M212B, M212C, M212D, M220, M301, M302, M303, M304, M305, M306, M412, M415, M501, M502, M612, M701, M702, M703, M704, E100, E202A, E211A, E211B, E211C, E211D, E212A, E212B, E601, E611C, E611D, E612A, E612B, T001, T300, T402, T403, T404, T500

PART 1 - BIDDING AND CONTRACT REQUIREMENTS

1.01 NOT USED

PART 2 - SPECIFICATIONS

2.01 06 40 00 – INTERIOR ARCHITECTURAL WOODWORK

A. Add section 2.12 Upholstered Seating in its entirety.

2.02 07 54 19 - POLYVINYL-CHLORIDE (PVC) ROOFING

A. Reissue specification in its entirety to delete mentions of substrate board and add vapor retarder.

2.03 08 41 13 – ALUMINUM-FRAMED ENTRANCES AND STOREFRONTS

A. Revise 2.01.A. as follows:

8831 Keystone Crossing, Indianapolis, IN 46240 | 317.848.7800 | csoinc.net

A. Basis-of-Design Product: Subject to compliance with requirements, provide Tubelite ~~TU2400~~ **14000 I/O** or comparable product by one of the following:

B. Add manufacturer to 2.01.A.

6. Cross Aluminum Products.

C. Add section 2.09 THERMAL ALUMINUM FLUSH DOORS.

2.09 THERMAL ALUMINUM FLUSH DOORS

A. Basis-of-design product: Aluminum Thermal Flush Doors by Cross Aluminum Products Inc.

B. Door assembly

1. Door Stile: To be aluminum alloy 6063; temper to be T5 with a minimum 1/8" wall thickness. Stiles to be thermally broken in 2 places.
2. Stile Thickness: To be 1 3/4" thick tubular extrusion.
3. Door Joinery: Joinery shall be 3/8" diameter zinc plated tie rods bolted through interlocking stiles. Minimum of 3 tie rods per door (where applicable).
4. Top of Door: To receive added 1/8" reinforcement closer plate adhered to interior wall for door closer hardware.
5. Top/Bottom of Door: To receive 1/8" thick cap for further seal and to trim the top and bottom of door.

C. Pattern:

1. Inside door face: Smooth
2. Outside door face: Smooth

D. **Insulation: Polyisocyanurate Rigid Foam**

2.04 <u>08 71 00 – DOOR HARDWARE</u>

A. Revise select hardware sets as identified in attached, revised sheets.

2.05 <u>08 87 00 – GLAZING FILM</u>

A. Delete 3.05 Schedule in its entirety.

2.06 <u>09 22 16 – NON-STRUCTURAL METAL FRAMING</u>

A. Delete all references to dimpled studs.

B. Revise 2.03.C. as follows:

~~C.~~ Studs and Runners: ASTM C 645. Use ~~either~~ steel studs and runners ~~or dimpled steel studs and runners.~~

1. Steel Studs and Runners:

a. Minimum Base-Metal Thickness: **0.033 inch**, 20 gauge ~~(20 EQ) 70ksi~~, unless noted otherwise on Drawings.

2.07 09 51 13 – ACOUSTICAL PANEL CEILINGS

A. Revise 2.04.B.5. as follows:

5. Suspension Type: ~~Felt Lock to Unistrut~~. **Individual suspension using hanging kit.**

B. Delete 2.04.B.5.a. in its entirety.

2.08 09 84 33 – SOUND-ABSORBING WALL UNITS

A. Revise 2.01.A.2. to add additional manufacturer.

2. Cardinal Acoustics, Inc.

2.09 10 21 13 – TOILET COMPARTMENTS

A. Revise 2.03.B.7. to add additional manufacturer.

7. ASI.

2.010 10 22 38 – OPERABLE PANEL PARTITIONS

A. Revise 2.02.A.e. to add additional manufacturer.

e. Corflex.

2.011 10 28 00 – TOILET, BATH, AND LAUNDRY ACCESSORIES

A. Revise 2.03.B.2.a. as follows:

a. Finish: Smooth, No. 4 finish (satin) ~~on ends and slip-resistant texture in grip area.~~

2.012 11 66 23 – GYMNASIUM EQUIPMENT

A. Delete 2.03.F.5.e. Radio Controls in its entirety.

2.013 11 68 00 – PLAYGROUND EQUIPMENT

A. Approved Equal for Balance Beam

1. Add Approved Equal: Single Balance Beam Model #NRO887, as manufactured by Kompan. Contact Recreation Insites, Fishers, IN. Phone: 317.617.1740.

B. Approved Equal for Boulder - Small

1. Add Approved Equal – The Pointe Rock Climber, as manufactured by Landscape Structures, PlayPros, Phone: 502.395.3234.

C. Approved Equal for Stump Climber large

1. Add Approved Equal – Log Stepper 18", as manufactured by Landscape Structures, PlayPros, Phone: 502.395.3234.

D. Approved Equal for Stump Climber small

1. Add Approved Equal – The Stepper Rock Climber, as manufactured by Landscape Structures, PlayPros, Phone: 502.395.3234.

2.014 12 32 16 – MANUFACTURED PLASTIC-LAMINATE-FACED CASEWORK

A. Revise 2.01.A.6. to add additional manufacturer.

6. Case Systems.

2.015 23 21 13.33 – GROUND-LOOP HEAT-PUMP PIPING (OUTDOORS)

A. Replace the section in its entirety.

B. Revise pipe sizing for well piping down to 400 ft.

C. Revise thermal grout performance requirements.

D. Revise pipe minimum installation cover depth to four (4) feet.

2.016 26 05 19 – ELECTRICAL POWER CONDUCTORS AND CABLES

A. Replace the section in its entirety. Impose limits on the application of Type MC Cable.

2.017 27 05 28 – PATHWAYS FOR COMMUNICATIONS SYSTEMS

A. ADD subsection 1.1.B.9 to read as follows:

9. Pole-Mounted NEMA Enclosures

B. ADD Paragraph 2.8 to read as follows

2.8 POLE MOUNTED NEMA ENCLOSURES

A. Boxes shall be a minimum of 12" W x 14" L x 6" D.

B. Boxes shall be minimum NEMA 4x rated.

C. Boxes shall have integrated double-duplex 120V hardwired outlet.

D. Boxes shall have integrated equipment mounting backplane.

E. Penetrations through boxes shall be fully weather sealed.

F. Boxes shall support the weight of all internally and externally mounted components.

G. All infrastructure requirements shall at a minimum meet the details and pathways illustrated within the T-series sheets.

H. Acceptable Manufacturers:

1. Altinex

2. Or Equal

2.018 28 13 00 – ELECTRONIC ACCESS CONTROL

A. REVISE Paragraph 2.5.A to read as follows:

A. Door position switches shall be provided by Division 08 and wired to the access control system by the EACS Integrator.

B. DELETE Paragraph 2.5.C and subparagraphs 2.5.C.1 and 2.5.C.2 entirely.

C. REVISE Paragraph 2.6.A to read as follows:

A. REX (request-to-exit) motion sensors shall be provided by Division 08 and wired to the access control system by the EACS Integrator.

D. DELETE Paragraph 2.6.B entirely.

E. DELETE Paragraph 2.6.C and subparagraphs 2.6.C.1, 2.6.C.2, 2.6.C.3 and 2.6.C.4 entirely.

F. DELETE Paragraph 2.6.C and subparagraphs 2.6.D.1, 2.6.D.2, 2.6.D.3, 2.6.D.4 and 2.6.D.5 entirely.

2.019 32 33 00 – SITE FURNISHINGS

A. Approved Equals for Shade Structure

1. Add Approved Equal: 20’ x 20’ x 20’ Modern Shade 3-Point Shade, as manufactured by Modern Shade. Contact Recreation Insites, Fishers, IN. Phone:317-617-1740.

2. Add Approved Equal: 20’ x 20’ x 20’ 3-Point Hypar Sail, as manufactured by USA Shade. Contact Snider Recreation, North Royalton, OH. Phone: 812-373-6427.

B. Add Collapsible Bollard

1. See Drawings for proposed locations; confirm in field with Landscape Architect prior to installation.

A. Manufacturer: MaxiForce

B. Model: MCSW-SS1-EZ with Breakaway System

C. Color and Finish: Standard Color to be chosen by Landscape Architect.

D. Verify locations in field with Landscape Architect prior to installation

2.020 32 92 00 TURF AND GRASSES

A. Bluegrass Blend Seed Mix: Provide seed mixture composed of freshly produced grass seed, proportioned as follows. Sow seed at the rate of 4 lb/1000 sq. ft., or as required to achieve the performance requirements of successful germination and coverage

1. 65 percent Kentucky bluegrass (Poa pratensis).

2. 20 percent chewings red fescue (Festuca rubra variety).

3. 15 percent perennial ryegrass (Lolium perenne).

4. * Follow all manufacturer's recommendations for application procedures and seed bed preparation. No noxious weed seed.

PART 3 - DRAWINGS

CIVIL

3.01 C000 – TITLE SHEET

A. Modified Drawing Index to identify the revised sheets & dates under this Addendum.

3.02 C101 – DEMOLITION PLAN

A. Removed new curb at southern end of site (emergency access drive)

B. Modified limits of asphalt sidewalk removal & replacement

C. Added right-of-way asphalt mill & resurface and full depth replacement at drive entrances for clean asphalt condition at projection completion

D. Added general notes #2 with list of required permits from the City

3.03 C300 – OVERALL GRADING PLAN

A. Modified grading with additional spot shot detail

3.04 C301– GRADING PLAN

A. Modified grading with additional spot shot detail

3.05 C302– GRADING PLAN

A. Modified grading with additional spot shot detail

3.06 C303– GRADING PLAN

A. Modified grading with additional spot shot detail

3.07 C304– OVERALL FLOOD ROUTING PLAN

A. Modified flood routing per City comments

3.08 C400 – OVERALL STORMWATER PLAN

A. Clouded revised areas

3.09 C401 – STORMWATER STRUCTURE PROFILE

A. Modified pipe lengths – see subsequent sheets

3.010 C402 – STORMWATER PLAN

A. Modified location of STR 406 and pipe lengths

B. Added pipe length to outfall pipe leaving STR 102 & moved end section STR 100 closer to stream, per City comment

C. Modified STR 425 location and pipe lengths

D. Modified underdrain at north end of property (STR 303, 234, 410A, 432) to Callout “B’ for 6-inch underdrain

E. Added callouts “C” for pipe crossing locations

3.011 C403 – STORMWATER PLAN

A. Modified STR 425 location and pipe lengths

B. Modified STR 303 from box inlet to manhole, lower pipe lengths

C. Modified underdrain at north end of property (STR 303, 234, 410A, 432) to Callout “B’ for 6-inch underdrain

D. Added callouts “C” for pipe crossing locations

3.012 C404 – STORMWATER PROFILES

A. Modified utility crossings and added labels

3.013 C405 – STORMWATER PROFILES

A. Modified utility crossings and added labels

3.014 C500 – OVERALL UTILITY PLAN

A. Modified general utility notes #12-15

B. Removed southernmost fire hydrant and 200 LF of water leader pipe, as approved by the Fire Department

3.015 C501 – UTILITY PLAN

A. Modified general utility notes #12-15

B. Removed southernmost fire hydrant and 200 LF of water leader pipe, as approved by the Fire Department

3.016 C502 – UTILITY PLAN

A. Removed southernmost fire hydrant and 200 LF of water leader pipe, as approved by the Fire Department

3.017 C800 – SITE DETAILS

A. Removed site materials details conflicting with L series details

3.018 C801 – SITE DETAILS

A. Added general note for contractor to provide backflow prevention that meets Indiana Cross Connection Control Manual, per City Utility comments

3.019 C803 – SITE DETAILS

A. Added toe anchors to concrete end section detail #423

3.020 C804 – SITE DETAILS

A. Added emergency overflow weir detail (Detail #434)

B. Modified outlet control structure detail (Detail #433)

3.021 C900 – STORMWATER POLLUTION PREVENTION PLAN- OVERALL

A. Clouded areas that revised

3.022 C901 – STORMWATER POLLUTION PREVENTION PLAN- EAST

A. Added riprap aprons on end sections into pond, per City comment

B. Extended riprap apron outlet to the stream from STR 100, per City comment. Added viewport to show this extension area

3.023 C902 – STORMWATER POLLUTION PREVENTION PLAN- WEST

A. Added permanent/temporary seeding on the south trail area per city comment.

LANDSCAPE

3.024 L102 – SITE MATERIALS PLAN

A. Add of Mill and Resurface areas at entrance

B. Extend new asphalt path at entrances.

3.025 L104 – SITE MATERIALS PLAN

A. Add of HD Concrete Apron at emergency access drive.

B. Add of Collapsible Breakaway Bollard at emergency access drive.

C. Add of Mill and Resurface areas at entrance

D. Extend new asphalt path at entrances.

3.026 L202 – SITE LAYOUT PLAN

A. Dimension updates to reflect changes on L102

3.027 L204 – SITE LAYOUT PLAN

A. Dimension updates to reflect changes on L104

3.028 L401 – SITE PLANTING PLAN

A. Update Tree location near bus lot.

3.029 L402 – SITE PLANTING PLAN

A. Update turf hatch to reflect changes on L102.

3.030 L404 – SITE PLANTING PLAN

A. Update turf hatch to reflect changes on L104.

STRUCTURAL

3.031 S001 – GENERAL STRUCTURAL NOTES

A. Reinforced Masonry Notes added as shown

3.032 S002 – GENERAL STRUCTURAL NOTES & SCHEDULES

A. AESS schedule removed as shown

3.033 S201A – FOUNDATION PLAN - UNIT A

A. Foundation Plan notes have been modified as shown

B. 5” Concrete SOG delineation line has been shown in the media center

3.034 S201B - FOUNDATION PLAN - UNIT B

A. Foundation Plan notes have been modified as shown

B. 5” Concrete SOG delineation line has been shown in the media center

C. Additional tags and section references have been added for clarity

3.035 S201C – FOUNDATION PLAN – UNIT C

A. Foundation Plan notes have been modified as shown

B. 5” Concrete SOG delineation line has been shown in the media center

3.036 S201D - FOUNDATION PLAN - UNIT D

A. Foundation Plan notes have been modified as shown

B. 5” Concrete SOG delineation line has been shown in the media center

C. Additional Tags and dimensions have been added for clarity

D. Column sizes on grid D4 have been updated

3.037 S202A – SECOND FLOOR FRAMING PLAN – UNIT A

A. Member sizes updated as shown

B. Additional slab edge dimensions shown for clarity

C. Additional dimensions shown for clarity

3.038 S202B - SECOND FLOOR FRAMING PLAN – UNIT B

A. Member sizes updated as shown

B. Additional slab edge dimensions shown for clarity

C. Additional dimensions shown for clarity

3.039 S203C – LOW ROOF FRAMING PLAN – UNIT C

A. Additional dimensions shown for clarity

3.040 S203D – LOW ROOF FRAMING PLAN – UNIT D

A. Additional sections provided for clarity

B. Additional dimensions shown for clarity

C. Member sizes updated as shown

3.041 S204D – ROOF FRAMING PLAN – UNIT D

A. Framing modifications along grid D1.9/D2 as shown.

3.042 S301 – FRAMING ELEVATIONS

A. Stiffener plates and work point clarity added to all frame elevations

3.043 S302 – FRAMING ELEVATIONS

A. Stiffener plates and work point clarity added to all frame elevations

B. Truss member sizes and detailing modified as shown on detail 4/S302

3.044 S402 – TYPICAL DETAILS

A. Base plate details modified as shown

3.045 S404 – TYPICAL DETAILS

A. Slab on deck details modified as shown

3.046 S405 – TYPICAL DETAILS

A. Details removed as shown

3.047 S701 – SECTIONS & DETAILS

A. Detail 1/S701 modified as shown

3.048 S702 - SECTIONS & DETAILS

A. Detail 1/S702 modified as shown

B. Detail 7/S702 modified as shown

C. Detail 10/S702 added for additional clarity

3.049 S703 – SECTIONS & DETAILS

A. Details 5-6/S703 modified as shown

B. Details 10-12/S703 modified as shown

C. Detail 13/S703 added as shown for additional clarity

3.050 S713 – SECTIONS & DETAILS

A. Details modified as shown

B. Detail 11/S713 added as shown

ARCHITECTURAL

3.051 A-SERIES KEYNOTES

A. Revise keynote 07 71 00-D to read **MANUFACTURED 2-PIECE COUNTERFLASHING SYSTEM**.

B. Add keynote 08 41 13-E to read **2 ½" x 2 ½" ALUMINUM ANLGE CLOSURE. COLOR TO MATCH STOREFRONT**.

3.052 A120 – COMPOSITE ROOF PLAN

A. Revise **ROOF TYPES** as clouded on attached sheet A120.

3.053 A200 SERIES GENERAL NOTES

A. Revise general note “F” to read “REFER TO WALL TYPE SCHEDULE, SHEET **A010**, TO DETERMINE WHICH WALLS EXTEND TO DECK. SEE STRUCTURAL FOR TOP SUPPORT DETAIL. WHERE METAL STUDS EXTEND TO DECK, PROVIDE SLIP CONNECTIONS FOR ROOF/ FLOOR DEFLECTION.”

3.054 A211B – FIRST FLOOR REFLECTED CEILING PLAN – UNIT B

A. Revise ceiling in GRADE LEVEL STORAGE B132A as shown on the attached sheet for clarity.

3.055 A211C – FIRST FLOOR REFLECTED CEILING PLAN – UNIT C

A. Revise ceiling height in COOL DOWN ROOM C158.

3.056 A212A – SECOND FLOOR REFLECTED CEILING PLAN – UNIT A

A. Tag ceiling in Vest. 101 as shown on the attached sheet.

3.057 A404 – WALL SECTIONS

A. Revise steel in 2/A404 and 3/A404 as shown on the attached sheet. See structural drawings for more information.

3.058 A405 – WALL SECTIONS

A. Revise steel in 1/A405 and 2/A405 as shown on the attached sheet. See structural drawings for more information.

3.059 A420 – ENLARGED SECTION DETAILS

A. Detail 3/A420 ENLARGED SECTION DETAIL revise keynotes and detail as clouded on attached sheet A420.

B. Detail 4/A420 ENLARGED SECTION DETAIL revise keynotes and detail as clouded on attached sheet A420.

C. Detail 6/A420 ENLARGED SECTION DETAIL revise detail as clouded on attached sheet A420.

D. Detail 7/A420 ENLARGED SECTION DETAIL revise keynotes and detail as clouded on attached sheet A420.

E. Detail 8/A420 ENLARGED SECTION DETAIL revise keynotes and detail as clouded on attached sheet A420.

F. Detail 13/A420 ENLARGED SECTION DETAIL revise keynotes and detail as clouded on attached sheet A420.

3.060 A421 – ENLARGED SECTION DETAILS

A. Detail 4/A421 ENLARGED SECTION DETAIL revise keynotes and detail as clouded on attached sheet A421.

B. Detail 5/A421 ENLARGED SECTION DETAIL revise keynotes and detail as clouded on attached sheet A421.

C. Detail 7/A421 ENLARGED SECTION DETAIL revise keynotes and detail as clouded on attached sheet A421.

D. Detail 8/A421 ENLARGED SECTION DETAIL revise keynotes and detail as clouded on attached sheet A421.

E. Detail 9/A421 ENLARGED SECTION DETAIL revise keynotes and detail as clouded on attached sheet A421.

F. Detail 10/A421 ENLARGED SECTION DETAIL revise keynotes and detail as clouded on attached sheet A421.

G. Detail 11/A421 ENLARGED SECTION DETAIL revise keynotes and detail as clouded on attached sheet A421.

3.061 A422 – ENLARGED SECTION DETAILS

A. Detail 1/A422 ENLARGED SECTION DETAIL revise detail as shown on attached sheet A422.

B. Detail 2/A422 ENLARGED SECTION DETAIL revise keynotes and detail as clouded on attached sheet.

C. Detail 3/A422 ENLARGED SECTION DETAIL revise detail as shown on attached sheet.

D. Detail 5/A422 ENLARGED SECTION DETAIL revise keynotes and detail as clouded on attached sheet.

E. Detail 6/A422 ENLARGED SECTION DETAIL revise keynotes and detail as clouded on attached sheet.

F. Detail 8/A422 ENLARGED SECTION DETAIL revise keynotes and detail as clouded on attached sheet. See structural drawings for more information.

G. Detail 9/A422 ENLARGED SECTION DETAIL revise keynotes and detail as clouded on attached sheet. See structural drawings for more information.

3.062 A430 – ENLARGED PLAN DETAILS

A. Detail 5/A430 ENLARGED PLAN DETAIL revise keynotes and detail as clouded on attached sheet.

B. Detail 11/A430 ENLARGED PLAN DETAIL revise keynotes and detail as clouded on attached sheet.

3.063 A431 – ENLARGED PLAN DETAILS

A. Detail 1/A431 ENLARGED PLAN DETAIL revise keynotes and detail as clouded on attached sheet.

B. Detail 2/A431 ENLARGED PLAN DETAIL revise keynotes and detail as clouded on attached sheet.

C. Detail 3/A431 ENLARGED PLAN DETAIL revise keynotes and detail as clouded on attached sheet.

D. Detail 5/A431 ENLARGED PLAN DETAIL revise keynotes and detail as clouded on attached sheet.

E. Detail 9/A431 ENLARGED PLAN DETAIL revise keynotes and detail as clouded on attached sheet.

3.064 A432 – ENLARGED PLAN DETAILS

A. Detail 3/A432 ENLARGED PLAN DETAIL revise keynotes and detail as clouded on attached sheet.

3.065 A500 SERIES GLASS SCHEDULE

A. Add glass type "G3A – LAMINATED SECURITY GLAZING."

3.066 A502 – DOOR SCHEDULE

A. Remove panel glazing "G2" for door 225. This door should not have a vision lite.

B. Remove panel glazing "G1" for doors 179-2 and 182. These doors should not have vision lites.

C. Revise door elevation for doors V101-3, V101-4, V103-4, V103-5, and V103-6 from ~~D3~~ to **D4**.

D. Revise panel glazing for doors V103-4, V103-5, and V103-6 from ~~G3~~ to **G3A**. Revise frame glazing for these doors from ~~G3~~ to **G3A, G5**.

E. Revise frame elevation of door V103-6 from ~~F8A~~ to **F8**.

3.067 A503 – DOOR AND FRAME ELEVATIONS

A. Revise glazing on frames F8 and F15 as shown on the attached sheet.

3.068 A504 – WINDOW ELEVATIONS

A. Revise glazing on window WD6 as shown on the attached sheet.

3.069 A653 – MILLWORK DETAILS

A. Revise shelf thickness in Millwork Elevations 11/A653 and 12/A653.

3.070 A800 – FINISH LEGEND & NOTES

A. Remove plastic laminate PL2 in its entirety.

B. Revise manufacturer, style and color in Rug Schedule (Alternate).

3.071 A801D – FIRST FLOOR FINISH PLAN – UNIT D

A. Add finish tag **UP2** to operable partition in CAFETERIA D171.

3.072 A802B – SECOND FLOOR FINISH PLAN – UNIT B

A. Add group finish tag as indicated on plan.

PLUMBING

3.073 P101A – UNDERSLAB PLAN – UNIT A - PLUMBING

A. REISSUE THIS DRAWING IN ITS ENTIRETY.

B. DELETE NOMENCLATURE.

3.074 P101B – UNDERSLAB PLAN – UNIT B - PLUMBING

A. REISSUE THIS DRAWING IN ITS ENTIRETY.

B. ADD INVERT ELEVATIONS AND PIPE SLEEVE.

3.075 P101D – UNDERSLAB PLAN – UNIT D - PLUMBING

A. REISSUE THIS DRAWING IN ITS ENTIRETY.

B. REVISE INVERT ELEVATIONS AND PIPE SLEEVE.

C. ADD 4” WASTE PIPING FOR FLOOR DRAIN.

D. CHANGE STORM PIPE SIZE AT COLUMN LINE D8/DP.

3.076 P201A – FIRST FLOOR PLAN – UNIT A - PLUMBING

A. REISSUE THIS DRAWING IN ITS ENTIRETY.

B. REVISE SHUT OFF VALVE LOCATIONS.

3.077 P201B – FIRST FLOOR PLAN – UNIT B - PLUMBING

A. REISSUE THIS DRAWING IN ITS ENTIRETY.

B. ADD PIPE SIZES.

3.078 P201C – FIRST FLOOR PLAN – UNIT C - PLUMBING

A. REISSUE THIS DRAWING IN ITS ENTIRETY.

B. DELETE RANDOM PIPE SIZE.

3.079 P201D – FIRST FLOOR PLAN – UNIT D - PLUMBING

A. REISSUE THIS DRAWING IN ITS ENTIRETY.

B. REVISE STORM PIPING AT COLUMN LINE DG/D4.

C. REVISE GAS METER NOTE.

3.080 P202B – SECOND FLOOR PLAN – UNIT B - PLUMBING

A. REISSUE THIS DRAWING IN ITS ENTIRETY.

B. REVISE VENT PIPING.

3.081 P202C – SECOND FLOOR PLAN – UNIT C - PLUMBING

A. REISSUE THIS DRAWING IN ITS ENTIRETY.

B. DELETE PIPING.

3.082 P202D – SECOND FLOOR PLAN – UNIT D - PLUMBING

A. REISSUE THIS DRAWING IN ITS ENTIRETY.

B. REVISE 3” VENT THRU ROOF LOCATION.

C. REVISE STORM RISER IN DETAIL A TO MISS STRUCTURAL BEAM.

3.083 P220 – ROOF PLAN – PLUMBING

A. REISSUE THIS DRAWING IN ITS ENTIRETY.

B. REVISE GAS LOCATION FOR MAKE UP AIR UNIT.

C. DELETE MECHANICAL EQUIPMENT FROM SHEET.

3.084 P301 – ENLARGED PLANS – PLUMBING

A. REISSUE THIS DRAWING IN ITS ENTIRETY.

B. REVISE NOTE FOR GAS METER ASSEMBLY.

C. ADDD FLOOR DRAIN.

D. ADD PIPE SIZES.

E. ADD NOTES REGARDING SPRINKLER SYSTEMS.

3.085 P303 – ENLARGED TOILET ROOM PLANS – UNIT B - PLUMBING

A. REISSUE THIS DRAWING IN ITS ENTIRETY.

B. ADD NOTE #10 TO PLAN NOTES.

C. DELETE PIPIND IN ENLARGED PLAN 4.

D. ADD PLAN NOTE 10 TO ENLARGED PLAN 6.

3.086 P360 – ENLARGED KITCHEN PLAN - PLUMBING

A. REISSUE THIS DRAWING IN ITS ENTIRETY.

B. REVISE LOCATION OF GAS PIPING UP THRU ROOF.

C. REVISE LOCATION OF VENT PIPING.

3.087 P401 – DETAILS - PLUMBING

A. REISSUE THIS DRAWING IN ITS ENTIRETY.

B. DELETE GAS METER ASSEMBLY DETAIL.

C. CHANGE NOMENCLATURE FOR WATER HEATERS IN DETAIL A.

MECHANICAL

3.088 M201A - FIRST FLOOR PLAN - UNIT A - AIR DISTRIBUTION

A. REISSUE THIS DRAWING IN ITS ENTIRETY.

B. REVISED EXHAUST CFM.

3.089 M202A - SECOND FLOOR PLAN - UNIT A - AIR DISTRIBUTION

A. REISSUE THIS DRAWING IN ITS ENTIRETY.

B. REVISED EXHAUST AND RETURN CFM.

3.090 M202D - SECOND FLOOR PLAN - UNIT D - AIR DISTRIBUTION

A. REISSUE THIS DRAWING IN ITS ENTIRETY.

B. OFFSET DUCTWORK FOR EF-1 AND GFMAU-1 TO AVOID STRUCTURE.

3.091 M211A - FIRST FLOOR PLAN - UNIT A - HYDRONICS

A. REISSUE THIS DRAWING IN ITS ENTIRETY.

B. ADDED THERMOSTAT FOR TFC-A.

C. ADDED DIFFERENTIAL PRESSURE TRANSMITTER.

3.092 M211B - FIRST FLOOR PLAN - UNIT B - HYDRONICS

A. REISSUE THIS DRAWING IN ITS ENTIRETY.

B. ADDED THERMOSTAT FOR TFC-A.

C. ADDED DIFFERENTIAL PRESSURE TRANSMITTER.

3.093 M211C - FIRST FLOOR PLAN - UNIT C - HYDRONICS

A. REISSUE THIS DRAWING IN ITS ENTIRETY.

B. ADDED THERMOSTAT FOR TFC-A.

3.094 M211D - FIRST FLOOR PLAN - UNIT D - HYDRONICS

A. REISSUE THIS DRAWING IN ITS ENTIRETY.

B. ADDED ECUH-B.

C. ADDED DIFFERENTIAL PRESSURE TRANSMITTER.

3.095 M212A - SECOND FLOOR PLAN - UNIT A - HYDRONICS

A. REISSUE THIS DRAWING IN ITS ENTIRETY.

B. ADDED THERMOSTAT FOR TFC-A.

C. ADDED DIFFERENTIAL PRESSURE TRANSMITTER.

3.096 M212B - SECOND FLOOR PLAN - UNIT B - HYDRONICS

A. REISSUE THIS DRAWING IN ITS ENTIRETY.

B. ADDED THERMOSTAT FOR TFC-A.

C. ADDED DIFFERENTIAL PRESSURE TRANSMITTER.

3.097 M212C - SECOND FLOOR PLAN - UNIT C - HYDRONICS

A. REISSUE THIS DRAWING IN ITS ENTIRETY.

B. REVISED PIPE ABBREVIATIONS.

3.098 M212D - SECOND FLOOR PLAN - UNIT D - HYDRONICS

A. REISSUE THIS DRAWING IN ITS ENTIRETY.

B. REVISED PIPE ABBREVIATIONS.

3.099 M220 - ROOF PLAN - MECHANICAL

A. REISSUE THIS DRAWING IN ITS ENTIRETY.

B. REVISED LOCATIONS OF EF-1 AND GFMAU-1.

3.0100 M301 - UNIT D - ENLARGED MECHANICAL ROOMS - MECHANICAL

A. REISSUE THIS DRAWING IN ITS ENTIRETY.

B. REVISED GENERAL NOTES.

3.0101 M302 - UNIT A - ENLARGED MECHANICAL ROOM A219 - MECHANICAL

A. REISSUE THIS DRAWING IN ITS ENTIRETY.

B. ADDED PLAN NOTE #2.

C. ADDED MOTORIZED DAMPER IN EXHAUST DUCTWORK.

3.0102 M303 - UNIT B - ENLARGED MECHANICAL ROOM B222 - MECHANICAL

A. REISSUE THIS DRAWING IN ITS ENTIRETY.

B. ADDED PLAN NOTES.

C. ADDED GEOTHERMAL LOOF MINIMUM FLOW BYPASS DETAIL.

D. ADDED VENTILATION DUCTWORK AND GEO PIPING FOR WSHP-B123.

3.0103 M304 - UNIT A - ENLARGED MECHANICAL ROOMS - MECHANICAL

A. REISSUE THIS DRAWING IN ITS ENTIRETY.

B. ADDED SECTIONS.

3.0104 M305 - UNIT B - ENLARGED MECHANICAL ROOMS - MECHANICAL

A. REISSUE THIS DRAWING IN ITS ENTIRETY.

B. ADDED SECTIONS.

3.0105 M306 - UNIT C - ENLARGED MECHANICAL ROOMS - MECHANICAL

A. REISSUE THIS DRAWING IN ITS ENTIRETY.

3.0106 M412 - DETAILS - VALVE VAULTS

A. REISSUE THIS DRAWING IN ITS ENTIRETY.

B. REVISED DETAIL ‘A’.

C. REVISED DETAIL ‘B’.

D. REVISED NOTES.

3.0107 M415 - ERV PROFILES - MECHANICAL

A. REISSUE THIS DRAWING IN ITS ENTIRETY.

B. REVISED PROFILE TITLE.

3.0108 M501 - SCHEMATICS - ERV-A - AIR DISTRIBUTION

A. REISSUE THIS DRAWING IN ITS ENTIRETY.

B. REVISED ERV-A AIRFLOW SCHEMATIC.

3.0109 M502 - SCHEMATICS - ERV-B - AIR DISTRIBUTION

A. REISSUE THIS DRAWING IN ITS ENTIRETY.

B. REVISED ERV-B AIRFLOW SCHEMATIC.

3.0110 M612 - SCHEDULES - HYDRONICS

A. REISSUE THIS DRAWING IN ITS ENTIRETY.

B. REVISED TRENCHED FAN COIL SCHEDULE.

C. REVISED EXPANSION TANK SCHEDULE.

D. REMOVED ELECTRIC FINNED-TUBE RADIATION SCHEDULE.

3.0111 M701 - CONTROLS - GENERAL

A. REISSUE THIS DRAWING IN ITS ENTIRETY.

B. REMOVED KILN CONTROLS.

3.0112 M702 - CONTROLS - GROUND LOOP SYSTEM

A. REISSUE THIS DRAWING IN ITS ENTIRETY.

3.0113 M703 - CONTROLS - ERV & WSHP AIRFLOW SCHEMATICS

A. REISSUE THIS DRAWING IN ITS ENTIRETY.

B. REVISED CONTROL POINTS LIST TITLE.

3.0114 M704 - CONTROLS - TERMINAL UNITS

A. REISSUE THIS DRAWING IN ITS ENTIRETY.

B. ADDED KILN CONTROLS.

ELECTRICAL

3.0115 E100 – SITE PLAN – ELECTRICAL

A. REISSUE THIS DRAWING IN ITS ENTIRETY.

B. REVISED CAMERA LOCATIONS ON LIGHT POLES. REVISED COORESPONDING WIRE SIZING.

C. ADDED (2) RECEPTACLES FOR VALVE VAULTS. ADDED PLAN NOTE #18.

3.0116 E202A – SECOND FLOOR PLAN – UNIT A - LIGHTING

A. REISSUE THIS DRAWING IN ITS ENTIRETY.

B. CHANGED (2) ‘F09-10E’ FIXTURES TO ‘F04-10E’.

3.0117 E211A – FIRST FLOOR PLAN – UNIT A - POWER

A. REISSUE THIS DRAWING IN ITS ENTIRETY.

B. REVISED IDF ROOM TELECOM DEVICE COORDINATION. ADDED PLAN NOTE #5.

C. REVISED CIRCUITING.

3.0118 E211B – FIRST FLOOR PLAN – UNIT B - POWER

A. REISSUE THIS DRAWING IN ITS ENTIRETY.

B. REVISED IDF ROOM TELECOM DEVICE COORDINATION. ADDED PLAN NOTE #8.

C. REVISED CIRCUITING.

3.0119 E211C – FIRST FLOOR PLAN – UNIT C - POWER

A. REISSUE THIS DRAWING IN ITS ENTIRETY.

B. REVISED IDF ROOM TELECOM DEVICE COORDINATION. ADDED PLAN NOTE #15.

C. REVISED CIRCUITING.

3.0120 E211D – FIRST FLOOR PLAN – UNIT D - POWER

A. REISSUE THIS DRAWING IN ITS ENTIRETY.

B. REVISED IDF ROOM TELECOM DEVICE COORDINATION. ADDED PLAN NOTE #21.

C. CHANGED ECUH IN RECEIVING D181 FROM TYPE ‘ECUH-A’ TO ‘ECUH-B’.

D. REVISED CIRCUITING.

3.0121 E212A – SECOND FLOOR PLAN – UNIT A - POWER

A. REISSUE THIS DRAWING IN ITS ENTIRETY.

B. REVISED IDF ROOM TELECOM DEVICE COORDINATION. ADDED PLAN NOTE #5.

C. REMOVED (3) EFTR’S AND REPLACED WITH (5) TFC-B’S.

D. REVISED CIRCUITING.

3.0122 E212B – SECOND FLOOR PLAN – UNIT B - POWER

A. REISSUE THIS DRAWING IN ITS ENTIRETY.

B. REVISED IDF ROOM TELECOM DEVICE COORDINATION. ADDED PLAN NOTE #5.

C. REMOVED (3) EFTR’S AND REPLACED WITH (5) TFC-B’S.

D. REVISED CIRCUITING.

3.0123 E601C – SCHEDULES – ELECTRICAL

A. REISSUE THIS DRAWING IN ITS ENTIRETY.

B. REVISED INTERIOR AND EXTERIOR LIGHT FIXTURE SCHEDULE. ADDED EQUALS. REMOVED TYPE 'F09-10E'. ADDED TYPE 'F04-10E'.

3.0124 E611C – SCHEDULES – PANELBOARDS - FIRST FLOOR – UNIT C

A. REISSUE THIS DRAWING IN ITS ENTIRETY.

B. REVISED CIRCUITING IN PANEL '1CSL1'

3.0125 E611D – SCHEDULES – PANELBOARDS - FIRST FLOOR – UNIT D

A. REISSUE THIS DRAWING IN ITS ENTIRETY.

B. REVISED CIRCUITING IN PANEL '1DSL2'

3.0126 E612A – SCHEDULES – PANELBOARDS - SECOND FLOOR – UNIT A

A. REISSUE THIS DRAWING IN ITS ENTIRETY.

B. REVISED CIRCUITING IN PANELS '2AL2', '2ASL1'

3.0127 E612B – SCHEDULES – PANELBOARDS - SECOND FLOOR – UNIT B

A. REISSUE THIS DRAWING IN ITS ENTIRETY.

B. REVISED CIRCUITING IN PANELS '2BL2', '2BSL1'.

TECHNOLOGY

3.0128 T001 – TECHNOLOGY SITE PLAN

A. Revised verbiage in sheet note #8.

3.0129 T300 – TELECOM DIAGRAMS

A. Revised Diagram #2 to:

1. Clarify entrance cabling by Others.

2. Revise multi-mode verbiage to single-mode verbiage.

3.0130 T402 – SECURITY DETAILS

A. Revised verbiage in detail #6.

3.0131 T403 – SECURITY DETAILS

A. Revised detail 4 to delete EAC door type S3 detail and replace with EAC door type S3MS detail.

B. Revised detail 5 to remove door position sensor.

C. Revised detail 8 to remove door position sensor and REX Sensor.

D. Revised details 2, 3, 6, 7, 10, 11, and 12 to revise door position sensor note verbiage.

3.0132 T404 – SECURITY DETAILS

A. Added new sheet with singular detail.

3.0133 T500 – TECHNOLOGY/SECURITY SCHEDULES

A. Updated IDF C164 access control schedule to change Door Type/Descriptions for Doors 168-1 and V103-6.

PART 4 - OTHER ITEMS

4.01 NOT USED

PART 5 - QUESTION AND ANSWER

5.01 Question: Spec section 095113-2.05-G is calling for break metal closures at the window heads, but I currently only see details for drywall returns. Where is this detail located, and what type/color of break metal should be used?

A. Response: The brake metal closures occur at the clerestories in the gym and cafeteria. See section 4/A406 for more information.

5.02 Question: Typical wall type is 8” above ceilings. Corridors have an open ceiling concept. Should these walls go 8” above the classroom ceilings? @ the stair walls this show drywall only 8” above ceilings. Are the stairs to be rated? Detail 1/A010 shows the typical wall framing and hanging 8” above deck. Can you confirm this is the intent or provide other head of wall details.

A. Response: Typical walls are to go to deck unless followed by the # modifier, as noted on page A010. If the wall is followed by the # modifier, then detail 1/A010 would apply. Walls around the classrooms should go to deck unless noted otherwise. The stairs are not required to be rated.

5.03 Question: Specification is indicating that the erosion control blanket on slopes per the Civil Plans after permanent seeding is to be by the landscape contractor.

A. Response: It is unclear in this question where this is referenced. Per civil plans (Detail 904 on Sheet C904), the preparation of soil, including seed, shall be done prior to installing blankets. State Construction Stormwater General Permit requires the spreading of seed for any soil left exposed (or in this case, where erosion control blanket will be installed).

5.04 Question: Please confirm that the door thickness is not required to be 1-3/4” for the project and that 2” or 2-1/4” thick thermally broken doors are permitted as long as they meet all other specification requirements. Not every listed approved manufacturer under 08 41 13 2.01 has a 1-3/4” thick thermal door.

A. Response: Doors thicker than 1-3/4" are permitted as long as they meet all other specification requirements and are coordinated with the storefront or curtainwall system.

5.05 Question: The site utility drawings show a meter pit with an FDC in a pit at the road, but does not mention a backflow preventor. The fire protection drawings not show a backflow in the building. Will the fire protection backflow preventer be required in the riser room or will it be in the pit?

A. Response: This will be in the exterior pit. See City standard detail for vault on Sheet C801 that includes a double check detector assembly. See Columbus City Utility standards for acceptable make & model.

5.06 Question: For high-abuse locations, this list corridor walls and high traffic areas. Please confirm what is considered a high-traffic area.

A. Response: High-traffic areas are considered any public area (corridor, cafeteria, media center, etc.) that does not have wall tile. Individual offices, classrooms, storage rooms, and restrooms are excluded.

END OF ADDENDUM

SECTION 06 40 00 - INTERIOR ARCHITECTURAL WOODWORK

PART 1 - GENERAL

1.01 RELATED DOCUMENTS

A. Drawings and general provisions of the Contract, including General and Supplementary Conditions and Division 01 Specification Sections, apply to this Section.

1.02 SUMMARY

A. This Section includes the following:

1. Solid-surfacing-material window stool.
2. Hardware.
3. Shop finishing of interior woodwork.
4. Interior wood trim.
5. Wall mounted floating wood shelves.
6. Metal-wrapped bench.
7. Wood stair treads and risers.
8. **Upholstered Seating.**

B. Related Sections:

1. Division 12 Section “Manufactured Plastic-Laminate-Faced Casework”
2. Division 12 Section “Solid Surface Countertops”

1.03 REFERENCES

A. Minimum standards for work in this Section shall be in conformity with the Architectural Woodwork Standards (AWS), 1st Edition, A Specification of Qualities, Methods, and Workmanship Requisite to the Production and Installation of Architectural Millwork Adopted and Published Jointly, Effective October 1, 2009, As the Successor, Replacement, and Latest Edition of: AWI/AWMAC’s Quality Standards Illustrated (QSI), and WI’s Manual of Millwork (MM)

1.04 DEFINITIONS

A. Interior architectural woodwork includes wood furring, blocking, shims, and hanging strips for installing woodwork items unless concealed within other construction before woodwork installation.

1.05 ACTION SUBMITTALS

A. Product Data: For panel products, high-pressure decorative laminate, adhesive for bonding plastic laminate, solid-surfacing material, fire-retardant-treated materials and finishing materials and processes.

1. Include data for fire-retardant treatment from chemical treatment manufacturer and certification by treating plant that treated materials comply with requirements.

B. Shop Drawings: Show location of each item, dimensioned plans and elevations, large-scale details, attachment devices, and other components.

1. Show locations and sizes of furring, blocking, and hanging strips, including concealed blocking and reinforcement specified in other Sections.

C. Samples for Initial Selection:

1. Shop-applied transparent finishes.
2. Plastic laminates.

D. Samples for Verification:

1. Lumber with or for transparent finish, not less than 5 inches (125 mm) wide by 24 inches (600 mm) long, for each species and cut, finished on 1 side and 1 edge.
2. Veneer-faced panel products with or for transparent finish, 8 by 10 inches (200 by 250 mm), for each species and cut. Include at least one face-veneer seam and finish as specified.
3. Plastic laminates, 8 by 10 inches (200 by 250 mm), for each type, color, pattern, and surface finish, with 1 sample applied to core material and specified edge material applied to 1 edge.
4. Solid-surfacing materials, 6 inches (150 mm) square.

E. Product Certificates: Signed by manufacturers of woodwork certifying that products furnished comply with requirements.

1.06 INFORMATIONAL SUBMITTALS

A. Qualification Data: For Installer and fabricator.

B. Product Certificates: For each type of product, signed by product manufacturer.

1.07 QUALITY ASSURANCE

A. Fabricator Qualifications: A firm experienced in producing architectural woodwork similar to that indicated for this Project and with a record of successful in-service performance, as well as sufficient production capacity to produce required units.

B. Installer Qualifications: A firm experienced in installing architectural woodwork similar to that indicated for this Project and with a record of successful in-service performance.

C. Quality Standard: Unless otherwise indicated, comply with AWI's "Architectural Woodwork Standards" for grades of interior architectural woodwork indicated for construction, finishes, installation, and other requirements.

D. Fire-Test-Response Characteristics: Where fire-retardant materials or products are indicated, provide materials and products with specified fire-test-response characteristics as determined by testing identical products per test method indicated by UL, ITS, or another testing and inspecting agency acceptable to authorities having jurisdiction. Identify with appropriate markings of applicable testing and inspecting agency in the form of separable paper label or, where required by authorities having jurisdiction, imprint on surfaces of materials that will be concealed from view after installation.

1.08 DELIVERY, STORAGE, AND HANDLING

A. Do not deliver woodwork until painting and similar operations that could damage woodwork have been completed in installation areas. If woodwork must be stored in other than

installation areas, store only in areas where environmental conditions comply with requirements specified in “Project Conditions” Article.

1.09 PROJECT CONDITIONS

A. Environmental Limitations: Do not deliver or install woodwork until building is enclosed, wet work is complete, and HVAC system is operating and maintaining temperature and relative humidity at occupancy levels during the remainder of the construction period.

B. Field Measurements: Where woodwork is indicated to fit to other construction, verify dimensions of other construction by field measurements before fabrication, and indicate measurements on Shop Drawings. Coordinate fabrication schedule with construction progress to avoid delaying the Work.

1.10 COORDINATION

A. Coordinate sizes and locations of framing, blocking, furring, reinforcements, and other related units of Work specified in other Sections to ensure that interior architectural woodwork can be supported and installed as indicated.

PART 2 - PRODUCTS

2.01 MATERIALS

A. Wood Species and Cut for Transparent Finish: Maple, plain sliced, or as indicated in drawings.

B. Wood Species for Opaque Finish: Any closed-grain hardwood.

C. Wood Products: Comply with the following:

1. Hardboard: AHA A135.4.
2. Medium-Density Fiberboard: ANSI A208.2, Grade MD, made with binder containing no urea formaldehyde.
3. Particleboard: ANSI A208.1, Grade M-2, made with binder containing no urea formaldehyde.
4. Softwood Plywood: DOC PS 1, Medium Density Overlay.
5. Veneer-Faced Panel Products (Hardwood Plywood): HPVA HP-1, made with adhesive containing no urea formaldehyde.

2.02 FIRE-RETARDANT-TREATED MATERIALS

A. General: Where indicated, use materials impregnated with fire-retardant chemical formulations indicated by a pressure process or other means complying with requirements in this Article, that are acceptable to authorities having jurisdiction, and with fire-test-response characteristics specified.

1. Do not use treated materials that do not comply with requirements of referenced woodworking standard or that are warped, discolored, or otherwise defective.
2. Use fire-retardant-treatment formulations that do not bleed through or otherwise adversely affect finishes. Do not use colorants to distinguish treated materials from untreated materials.

3. Identify fire-retardant-treated materials with appropriate classification marking of UL, U.S. Testing, Timber Products Inspection, or another testing and inspecting agency acceptable to authorities having jurisdiction.

B. Fire-Retardant-Treated Lumber and Plywood by Pressure Process: Comply with performance requirements of AWPA C20 (lumber) and AWPA C27 (plywood). Use the following treatment type:

1. Exterior Type: Organic-resin-based formulation thermally set in wood by kiln drying.
2. Interior Type A: Low-hygroscopic formulation.
3. Mill lumber before treatment and implement special procedures during treatment and drying processes that prevent lumber from warping and developing discolorations from drying sticks or other causes, marring, and other defects affecting appearance of treated woodwork.

C. Fire-Retardant Particleboard: Panels complying with the following requirements, made from softwood particles and fire-retardant chemicals mixed together at time of panel manufacture to achieve flame-spread index of 25 or less and smoke-developed index of 25 or less per ASTM E 84.

1. For panels 3/4 inch (19 mm) thick and less, comply with ANSI A208.1 for Grade M-2 except for the following minimum properties: modulus of rupture, 1600 psi (11 Mpa); modulus of elasticity, 300,000 psi (2070 Mpa); internal bond, 80 psi (550 kPa); and screw-holding capacity on face and edge, 250 and 225 lbf (1100 and 1000 N), respectively.
2. Product: Subject to compliance with requirements, provide “Duraflake FR” by Willamette Industries, Inc.

D. Fire-Retardant Fiberboard: Medium-density fiberboard panels complying with ANSI A208.2, made from softwood fibers, synthetic resins, and fire-retardant chemicals mixed together at time of panel manufacture to achieve flame-spread index of 25 or less and smoke-developed index of 200 or less per ASTM E 84.

1. Product: Subject to compliance with requirements, provide “Medite FR” by SierraPine Ltd.; Medite Div.

2.03 CABINET HARDWARE AND ACCESSORIES

A. General: Provide cabinet hardware and accessory materials associated with architectural cabinets, except for items specified in Division 08 Section “Door Hardware (Scheduled by Describing Products).”

B. Hardware Standard: Comply with BHMA A156.9 for items indicated by referencing BHMA numbers or items referenced to this standard.

C. Exposed Hardware Finishes: For exposed hardware, provide finish that complies with BHMA A156.18 for BHMA finish number indicated.

1. As indicated on drawings, or if not indicated, Satin Chromium Plated: BHMA 626 for brass or bronze base; BHMA 652 for steel base.

D. For concealed hardware, provide manufacturer’s standard finish that complies with product class requirements in BHMA A156.9.

2.04 MISCELLANEOUS MATERIALS

A. Furring, Blocking, Shims, and Hanging Strips: Fire-retardant-treated softwood lumber, kiln dried to less than 15 percent moisture content.

B. Anchors: Select material, type, size, and finish required for each substrate for secure anchorage. Provide nonferrous-metal or hot-dip galvanized anchors and inserts on inside face of exterior walls and elsewhere as required for corrosion resistance. Provide toothed-steel or lead expansion sleeves for drilled-in-place anchors.

C. Adhesives, General: Adhesives shall not contain urea formaldehyde.

D. VOC Limits for Installation Adhesives: Installation adhesives shall comply with the following limits for VOC content when calculated according to 40 CFR 59, Subpart D (EPA Method 24):

1. Wood Glues: 30 g/L.
2. Multipurpose Construction Adhesives: 70 g/L.
3. Contact Adhesive: 250 g/L.

E. Adhesive for Bonding Plastic Laminate: Unpigmented contact cement.

1. Adhesive for Bonding Edges: Hot-melt adhesive or adhesive specified above for faces.

2.05 FABRICATION, GENERAL

A. Interior Woodwork Grade: Unless otherwise indicated, provide Premium-grade interior woodwork complying with referenced quality standard.

B. Wood Moisture Content: Comply with requirements of referenced quality standard for wood moisture content in relation to ambient relative humidity during fabrication and in installation areas.

C. Sand fire-retardant-treated wood lightly to remove raised grain on exposed surfaces before fabrication.

D. Fabricate woodwork to dimensions, profiles, and details indicated. Ease edges to radius indicated for the following:

1. Corners of Cabinets and Edges of Solid-Wood (Lumber) Members 3/4 Inch (19 mm) Thick or Less: 1/16 inch (1.5 mm).
2. Edges of Rails and Similar Members More Than 3/4 Inch (19 mm) Thick: 1/8 inch (3 mm).
3. Corners of Cabinets and Edges of Solid-Wood (Lumber) Members and Rails: 1/16 inch (1.5 mm).

E. Complete fabrication, including assembly, finishing, and hardware application, to maximum extent possible before shipment to Project site. Disassemble components only as necessary for shipment and installation. Where necessary for fitting at site, provide ample allowance for scribing, trimming, and fitting.

F. Shop-cut openings to maximum extent possible to receive hardware, appliances, plumbing fixtures, electrical work, and similar items. Locate openings accurately and use templates

or roughing-in diagrams to produce accurately sized and shaped openings. Sand edges of cutouts to remove splinters and burrs.

1. Seal edges of openings in countertops with a coat of varnish.

2.06 INTERIOR STANDING AND RUNNING TRIM

A. Grade: Premium.

B. Wood Species for Opaque Finish: Pine

C. For trim items wider than available lumber, use veneered construction. Do not glue for width.

D. Backout or groove backs of flat trim members and kerf backs of other wide, flat members, except for members with ends exposed in finished work.

E. Assemble casings in plant except where limitations of access to place of installation require field assembly.

F. Assemble moldings in plant to maximum extent possible. Miter corners in plant and prepare for field assembly with bolted fittings designed to pull connections together.

G. Specific Locations: Corridors – color accent walls. Paint to match accent wall.

2.07 SOLID SURFACING WINDOW STOOLS

A. Window Stools: ½ inch solid surface.

1. Edge Treatment: Eased edges.
2. Size: Provide size that provides minimum number of joints. Location of joints to be approved by Architect.
3. Tolerance: To be installed level. No lippage will be accepted at joints.
4. Location: All exterior windows, all interior windows that do not run to the floor, and any additional locations identified in Drawings.

2.08 SHOP FINISHING

A. Grade: Provide finishes of same grades as items to be finished.

B. General: Finish architectural woodwork at fabrication shop as specified in this Section. Defer only final touchup, cleaning, and polishing until after installation.

C. General: Shop finish transparent-finished interior architectural woodwork at fabrication shop as specified in this Section. Refer to Division 09 painting Sections for finishing opaque-finished architectural woodwork.

D. General: Drawings indicate items that are required to be shop finished. Finish such items at fabrication shop as specified in this Section. Refer to Division 09 painting Sections for finishing architectural woodwork not indicated to be shop finished.

E. Shop Priming: Shop apply the prime coat including backpriming, if any, for transparent-finished items specified to be field finished. Refer to Division 09 painting Sections for material and application requirements.

F. Preparation for Finishing: Comply with referenced quality standard for sanding, filling countersunk fasteners, sealing concealed surfaces, and similar preparations for finishing architectural woodwork, as applicable to each unit of work.

1. Backpriming: Apply one coat of sealer or primer, compatible with finish coats, to concealed surfaces of woodwork. Apply two coats to back of paneling and to end-grain surfaces. Concealed surfaces of plastic-laminate-clad woodwork do not require backpriming when surfaced with plastic laminate, backing paper, or thermoset decorative panels.

G. Transparent Finish:

1. Grade: Premium.
2. AWI Finish System: Catalyzed polyurethane.
3. Staining: Match approved sample for color.
4. Wash Coat for Stained Finish: Apply wash-coat sealer to woodwork made from closed-grain wood before staining and finishing.
5. Open Finish for Open-Grain Woods: Do not apply filler to open-grain woods.
6. Filled Finish for Open-Grain Woods: After staining (if any), apply paste wood filler to open-grain woods and wipe off excess. Tint filler to match stained wood.

a. Apply wash-coat sealer after staining and before filling.

7. Sheen: Satin, 31-45 gloss units measured on 60-degree gloss meter per ASTM D 523.

2.09 WALL MOUNTED FLOATING WOOD SHELVES [SH1, SH2]

A. Basis-of-design: Rakks Ethereal Floating Shelf

1. Bracket

a. Material: Aluminum
b. Length: Varies
c. Finish: Satin Silver
d. Maximum Load: 25 lbs/linear foot

2. Wood Shelf

a. Material: Hardwood
b. Species: White Maple
c. Cut: Rift cut
d. Thickness: 3/4”
e. Depth: Varies, refer to Drawings
f. Edge: Square
g. Finish: Stain

2.10 METAL WRAPPED BENCH

A. Powder-coated stainless steel sheet metal affixed to two (2) layers of 5/8” plywood.

1. Edge: Squared Edge
2. Turn down: 60 degree turn back
3. Color: Custom color selected by Architect.

4. Depth: 15 1/2”
5. Length: Varies

B. Stainless-Steel Sheet: ASTM A 240/A 240M, Type 316L.

C. Sealant for Countertops: Manufacturer's standard sealant of characteristics indicated below that complies with applicable requirements in Section 079200 "Joint Sealants."

1. Mildew-Resistant Joint Sealant: Mildew resistant, single component, nonsag, neutral curing, silicone.
2. Joint Sealant: Single component, nonsag, neutral curing, silicone; Class 25.
3. Color: As selected by Architect from manufacturer's full range.

D. Joints: Fabricate countertops without field-made joints.

E. Weld shop-made joints.

F. Sound deaden the undersurface with heavy-build mastic coating.

G. Extend the top down to provide a 2-inch-thick edge with a 1/2-inch (12.7-mm) return flange.

2.11 WOOD STAIR TREADS AND RISERS

A. Solid-Wood Riser and Treads

1. Manufacturers: Subject to compliance with requirements, provide product indicated on Drawings or comparable product by one of the following:

a. Hardwood Lumber Company.
b. JMP Wood.
c. Architect approved equal.

2. Species: White Maple.
3. Grade: 2nd or better.
4. Cut: Rift cut
5. Riser Thickness: 3/4”
6. Riser Height: 5-1/2”
7. Tread Thickness: 1-1/2”
8. Tread Depth: 1’-0 3/4”
9. Lengths: Full width of stair.
10. Nosing style: Eased edge 1/4” radius

a. 1/1/2” Anti-slip tread insert required 1” off nosing.

11. Finish: Tread coat with stain.
12. Application: Treads and risers at main stairs.

2.12 UPHOLSTERED SEATING

A. Fabrication, General

1. Lay upholstery material smooth and even. Cut evenly along intersecting surfaces. Provide welted upholstery where shown. All upholstery material shall

be lined up so that lines of patterns are straight and continuous and with linear patterns parallel to each other, and with vertical lines perpendicular. Upholster material smooth with sufficient tension so that the finished installation is free of tacks, scraps, ripples, scallops or puckers.

2. Apply fabrics to surfaces shown using application methods and fastenings as recommended by the fabric manufacturer to achieve a smooth, undistorted finish to the satisfaction of the Architect.

PART 3 - EXECUTION

3.01 PREPARATION

A. Before installation, condition woodwork to average prevailing humidity conditions in installation areas.

B. Before installing architectural woodwork, examine shop-fabricated work for completion and complete work as required, including removal of packing and backpriming.

3.02 INSTALLATION

A. General:

1. Grade: Install woodwork to comply with requirements for the same grade specified in Part 2 for fabrication of type of woodwork involved.
2. Assemble woodwork and complete fabrication at Project site to comply with requirements for fabrication in Part 2, to extent that it was not completed in the shop.
3. Install woodwork level, plumb, true, and straight. Shim as required with concealed shims. Install level and plumb (including tops) to a tolerance of 1/8 inch in 96 inches (3 mm in 2400 mm).
4. Scribe and cut woodwork to fit adjoining work, refinish cut surfaces, and repair damaged finish at cuts.
5. Fire-Retardant-Treated Wood: Handle, store, and install fire-retardant-treated wood to comply with chemical treatment manufacturer's written instructions, including those for adhesives used to install woodwork.
6. Anchor woodwork to anchors or blocking built in or directly attached to substrates. Secure with countersunk, concealed fasteners and blind nailing as required for complete installation. Use fine finishing nails for exposed fastening, countersunk and filled flush with woodwork and matching final finish if transparent finish is indicated.
7. Standing and Running Trim: Install with minimum number of joints possible, using full-length pieces (from maximum length of lumber available) to greatest extent possible. Do not use pieces less than 96 inches (2400 mm) long, except where shorter single-length pieces are necessary.

    a. Fill gaps, if any, between top of base and wall with plastic wood filler, sand smooth, and finish same as wood base if finished.
    b. Install wall railings on indicated metal brackets securely fastened to wall framing.
    c. Install standing and running trim with no more variation from a straight line than 1/8 inch in 96 inches (3 mm in 2400 mm).

8. Touch up finishing work specified in this Section after installation of woodwork. Fill nail holes with matching filler where exposed.

9. Refer to Division 09 Sections for final finishing of installed architectural woodwork not indicated to be shop finished.

B. Wall Mounted Wood Murals:

1. Drill Tree panels in approx. locations noted with “X” on shop drawings.
2. Mount/attach directly to wall per manufacturers recommendation/written instructions.

3.03 ADJUSTING AND CLEANING

A. Repair damaged and defective woodwork, where possible, to eliminate functional and visual defects; where not possible to repair, replace woodwork. Adjust joinery for uniform appearance.

B. Clean, lubricate, and adjust hardware.

C. Clean woodwork on exposed and semi-exposed surfaces. Touch up shop-applied finishes to restore damaged or soiled areas.

END OF SECTION

SECTION 07 54 19 - POLYVINYL-CHLORIDE (PVC) ROOFING

PART 1 - GENERAL

1.01 RELATED DOCUMENTS

A. Drawings and general provisions of the Contract, including General and Supplementary Conditions and Division 01 Specification Sections, apply to this Section.

1.02 SUMMARY

A. Section Includes:

1. Adhered PVC membrane roofing system.
2. Cover board.
3. Roof insulation.
4. Rooftop rubber support system.

B. Contractor’s Options:

1. Roof insulation may be polyisocyanurate or extruded polystyrene.

a. Either insulation requires a cover board.
~~b. Extruded polystyrene requires substrate board.~~

C. Coordination: Coordinate with installation of photovoltaic array to maintain membrane roofing warranty.

1.03 DEFINITIONS

A. Roofing Terminology: See ASTM D 1079 and glossary in NRCA's "The NRCA Roofing and Waterproofing Manual" for definition of terms related to roofing work in this Section.

1.04 PERFORMANCE REQUIREMENTS

A. General Performance: Installed membrane roofing and base flashings shall withstand specified uplift pressures, thermally induced movement, and exposure to weather without failure due to defective manufacture, fabrication, installation, or other defects in construction. Membrane roofing and base flashings shall remain watertight.

B. Material Compatibility: Provide roofing materials that are compatible with one another under conditions of service and application required, as demonstrated by membrane roofing manufacturer based on testing and field experience.

C. Roofing System Design: Provide membrane roofing system that is identical to systems that have been successfully tested by a qualified testing and inspecting agency to resist uplift pressure calculated according to ASCE/SEI 7.

D. FM Approvals Listing: Provide membrane roofing, base flashings, and component materials that comply with requirements in FM Approvals 4450 and FM Approvals 4470 as part of a membrane roofing system, and that are listed in FM Approvals' "RoofNav" for Class 1 or noncombustible construction, as applicable. Identify materials with FM Approvals markings.

1. Fire/Windstorm Classification: Class 1A-90.
2. Hail Resistance: SH.

1.05 ACTION SUBMITTALS

A. Product Data: For each type of product indicated.

B. Shop Drawings: For roofing system. Include plans, elevations, sections, details, and attachments to other work.

1. Base flashings and membrane terminations.
2. Tapered insulation, including slopes.
3. Roof plan showing orientation of steel roof deck and orientation of membrane roofing and fastening spacings and patterns for mechanically fastened membrane roofing.
4. Insulation fastening patterns for corner, perimeter, and field-of-roof locations.

C. Samples for Verification: For the following products:

1. Sheet roofing, of color specified, including T-shaped side and end lap seam.
2. Roof insulation.

1.06 INFORMATIONAL SUBMITTALS

A. Qualification Data: For qualified Installer and manufacturer.

B. Installer Qualifications: A qualified firm that is approved, authorized, or licensed by roofing system manufacturer to install manufacturer's product and that is eligible to receive manufacturer's warranty.

C. Manufacturer Certificates: Signed by roofing manufacturer certifying that roofing system complies with requirements specified in "Performance Requirements" Article.

1. Submit evidence of compliance with performance requirements.

D. Product Test Reports: Based on evaluation of comprehensive tests performed by manufacturer and witnessed by a qualified testing agency, for components of membrane roofing system.

E. Research/Evaluation Reports: For components of membrane roofing system, from the ICC-ES.

F. Warranties: Sample of special warranties.

1.07 CLOSEOUT SUBMITTALS

A. Maintenance Data: For roofing system to include in maintenance manuals.

1.08 QUALITY ASSURANCE

A. Manufacturer Qualifications: A qualified manufacturer that is UL listed and FM Approvals approved for membrane roofing system identical to that used for this Project.

B. Installer Qualifications: A qualified firm that is approved, authorized, or licensed by membrane roofing system manufacturer to install manufacturer's product and that is eligible to receive manufacturer's special warranty.

C. Source Limitations: Obtain components including roof insulation for membrane roofing system from same manufacturer as membrane roofing or approved by membrane roofing manufacturer.

D. Exterior Fire-Test Exposure: ASTM E 108, Class A; for application and roof slopes indicated, as determined by testing identical membrane roofing materials by a qualified testing agency. Materials shall be identified with appropriate markings of applicable testing agency.

E. Fire-Resistance Ratings: Where indicated, provide fire-resistance-rated roof assemblies identical to those of assemblies tested for fire resistance per ASTM E 119 by a qualified testing agency. Identify products with appropriate markings of applicable testing agency.

F. Preinstallation Roofing Conference: Conduct conference at Project site.

1. Meet with Owner, Architect, Owner's insurer if applicable, testing and inspecting agency representative, roofing Installer, roofing system manufacturer's representative, deck Installer, and installers whose work interfaces with or affects roofing, including installers of roof accessories and roof-mounted equipment.
2. Review methods and procedures related to roofing installation, including manufacturer's written instructions.
3. Review and finalize construction schedule and verify availability of materials, Installer's personnel, equipment, and facilities needed to make progress and avoid delays.
4. Examine deck substrate conditions and finishes for compliance with requirements, including flatness and fastening.
5. Review structural loading limitations of roof deck during and after roofing.
6. Review base flashings, special roofing details, roof drainage, roof penetrations, equipment curbs, and condition of other construction that will affect roofing system.
7. Review governing regulations and requirements for insurance and certificates if applicable.
8. Review temporary protection requirements for roofing system during and after installation.
9. Review roof observation and repair procedures after roofing installation.

1.09 DELIVERY, STORAGE, AND HANDLING

A. Deliver roofing materials to Project site in original containers with seals unbroken and labeled with manufacturer's name, product brand name and type, date of manufacture, approval or listing agency markings, and directions for storing and mixing with other components.

B. Store liquid materials in their original undamaged containers in a clean, dry, protected location and within the temperature range required by roofing system manufacturer. Protect stored liquid material from direct sunlight.

1. Discard and legally dispose of liquid material that cannot be applied within its stated shelf life.

C. Protect roof insulation materials from physical damage and from deterioration by sunlight, moisture, soiling, and other sources. Store in a dry location. Comply with insulation manufacturer's written instructions for handling, storing, and protecting during installation.

D. Handle and store roofing materials and place equipment in a manner to avoid permanent deflection of deck.

1.10 PROJECT CONDITIONS

A. Weather Limitations: Proceed with installation only when existing and forecasted weather conditions permit roofing system to be installed according to manufacturer's written instructions and warranty requirements.

1.11 WARRANTY

A. Warranty: Manufacturer's standard or customized form, without monetary limitation, in which manufacturer agrees to repair or replace components of membrane roofing system that fail in materials or workmanship within specified warranty period.

1. Total systems warranty includes membrane roofing, base flashings, roof insulation, fasteners, cover boards, ~~substrate board~~, roofing accessories, and other components of membrane roofing system.
2. Warranty Period: 20 years from date of Substantial Completion.

PART 2 - PRODUCTS

2.01 PVC MEMBRANE ROOFING

A. PVC Sheet: ASTM D 4434, Type II, fabric reinforced.

1. Basis of Design: Subject to compliance with requirements, provide Sika Sarnafil, G410 thermoplastic membrane with fiberglass reinforcement and lacquer coating or comparable products by one of the following:

a. Carlisle SynTec, Incorporated.
b. FiberTite
c. Johns Manville, A Berkshire Hathaway Company.

2. Thickness: 60 mils (1.5 mm) minimum.
3. Exposed Face Color: Reflective gray, textured.
4. Reinforcing Material: Fiberglass.

a. Thickness over Scrim: 0.027 inch (27mil) average, minimum (monolithic top layer not including any lacquer coating thickness).

5. Physical Properties:

a. Breaking Strength: 80 lbf, (356N) ASTM D 751, grab method.
b. Elongation at Break of reinforcement (MD X CD, %): 250 & 220, minimum ASTM D751.
c. Tearing Strength: 17.5 lbf (78 N) minimum; ASTM D1004
d. Ozone Resistance: No cracks after sample, wrapped around a 3-inch- (75-mm-) diameter mandrel, is exposed for 166 hours to a temperature of

104 deg F (40 deg C) and an ozone level of 100 pphm (100 mPa); ASTM D 1149.

e. Resistance to Heat Aging: 90 percent minimum retention of breaking strength, elongation at break, and tearing strength after 166 hours at 240 deg F (116 deg C); ASTM D 573.

f. Water Absorption: Less than 4 percent mass change after 166 hours' immersion at 158 deg F (70 deg C); ASTM D 471.

g. Linear Dimension Change: Plus or minus 0.02 percent; ASTM D 1204.

2.02 AUXILIARY MEMBRANE ROOFING MATERIALS

A. General: Auxiliary membrane roofing materials recommended by roofing system manufacturer for intended use, and compatible with membrane roofing.

1. Liquid-type auxiliary materials shall comply with VOC limits of authorities having jurisdiction.
2. Adhesives and sealants that are not on the exterior side of weather barrier shall comply with the following limits for VOC content when calculated according to 40 CFR 59, Subpart D (EPA Method 24):

a. Plastic Foam Adhesives: 50 g/L.
b. Gypsum Board and Panel Adhesives: 50 g/L.
c. Multipurpose Construction Adhesives: 70 g/L.
d. Fiberglass Adhesives: 80 g/L.
e. Single-Ply Roof Membrane Adhesives: 250 g/L.
f. Other Adhesives: 250 g/L.
g. PVC Welding Compounds: 510 g/L.
h. Adhesive Primer for Plastic: 650 g/L
i. Single-Ply Roof Membrane Sealants: 450 g/L.
j. Nonmembrane Roof Sealants: 300 g/L.
k. Sealant Primers for Nonporous Substrates: 250 g/L.
l. Sealant Primers for Porous Substrates: 775 g/L.

B. Sheet Flashing: Manufacturer's standard sheet flashing of same material, type, reinforcement, thickness, and color as PVC sheet membrane.

1. Refer to Division 07 Section “Sheet Metal Flashing and Trim” for metal reglets and counterflashings.

C. Bonding Adhesive: Manufacturer's standard.

D. Slip Sheet: Manufacturer's standard, of thickness required for application.

E. Water Cutoff Mastic: Manufacturer's standard butyl mastic sealant.

F. Metal Termination Bars: Manufacturer's standard, predrilled stainless-steel or aluminum bars, approximately 1 by 1/8 inch (25 by 3 mm) thick; with anchors.

G. Metal Battens: Manufacturer's standard, aluminum-zinc-alloy-coated or zinc-coated steel sheet, approximately 1 inch wide by 0.05 inch (25 mm wide by 1.3 mm) thick, prepunched.

H. Fasteners: Factory-coated steel fasteners and metal or plastic plates complying with corrosion-resistance provisions in FM Approvals 4470, designed for fastening membrane to substrate, and acceptable to membrane roofing system manufacturer.

I. Miscellaneous Accessories: Provide pourable sealers, preformed cone and vent sheet flashings, preformed inside and outside corner sheet flashings, T-joint covers, lap sealants, termination reglets, and other accessories.

~~2.03 SUBSTRATE BOARDS~~

~~A. Substrate Board: ASTM C 1177/C 1177M, glass-mat, water-resistant gypsum substrate, Type X, 5/8 inch (16 mm) thick.~~

~~1. Products: Subject to compliance with requirements, provide one of the following:~~

~~a. Georgia-Pacific Corporation; Dens Deck.~~

~~B. Fasteners: Factory-coated steel fasteners and metal or plastic plates complying with corrosion-resistance provisions in FM Approvals 4470, designed for fastening substrate board to roof deck.~~

2.03 VAPOR RETARDER

A. Vapor retarder: Self-adhesive vapor retarder/air barrier for use with insulated roof systems.

1. Products: Subject to compliance with requirements provide basis of design product or approved equal:

a. Sika Vaper Retarder SA 31

B. Thickness: 31 mm minimum.

C. Physical Properties

1. Resistance to dynamic puncture: 152 lbf
2. Tensile Strength Machine Direction: 54 lbf/in
3. Tensile Strength Cross Machine Direction: 68 lbf/in
4. Tear Strength Machine Direction: 90 lbf/in
5. Tear Strength Cross Machine Direction: 79 lbf/in
6. Seam Strength: 41 lbf/ft
7. Water Vapor Transmission: 0.018 perm
8. Adhesion in peel: 5.4 lbf/in
9. Water Absorption: 0.1% maximum
10. Permeability to air: <0.000012 L/(Pa x m^2 x s)
11. Low temperature bend: -35°F
12. Air flow rate: <0.00006 cfm/ft^2

D. Areas of application: Direct to steel, concrete, gypsum decks, approved gypsum boards, and plywood.

2.04 ROOF INSULATION

A. General: Preformed roof insulation boards manufactured or approved by PVC membrane roofing manufacturer, selected from manufacturer's standard sizes suitable for application, of thicknesses indicated and that produce FM Approvals-approved roof insulation.

B. Contractor's Option: Extruded-Polystyrene Board Insulation: ASTM C578, Type IV, 1.45-lb/cu. ft. minimum density, square edged.

1. Acceptable Manufacturers:

a. DuPont.
b. Kingspan Insulation LLC.
c. Owens Corning.

C. Polyisocyanurate Board Insulation: ASTM C 1289, Type II, Class 2, Grade 2, glass-fiber mat facer on both major surfaces.

1. Aged R-value shall be as designated at mean temperatures indicated and as follows: R 5.6 at 75 deg F for 1 inch thick insulation board.
2. Surface Burning Characteristics: Maximum flame spread of 75.
3. Compressive Strength: 20 psi per ASTM D 1621-94 Test Method for Compressive Properties of Rigid Cellular Plastics.
4. Dimensional Stability: Less than 2.0 percent change in length, width and thickness per ASTM D 2126-94 Test Method for Response of Rigid Cellular Plastics to Thermal and Humid Aging.
5. Acceptable Manufacturers:

a. Carlisle Syntec Systems.
b. Elevate; Holcim Building Envelope.
c. GAF.

D. Tapered Insulation: Provide factory-tapered insulation boards fabricated to slope of 1/4 inch per 12 inches (1:48) unless otherwise indicated.

E. Provide preformed saddles, crickets, tapered edge strips, and other insulation shapes where indicated for sloping to drain. Fabricate to slopes indicated.

2.05 INSULATION ACCESSORIES

A. General: Furnish roof insulation accessories recommended by insulation manufacturer for intended use and compatibility with membrane roofing.

B. Fasteners: Factory-coated steel fasteners and metal or plastic plates complying with corrosion-resistance provisions in FM Approvals 4470, designed for fastening roof insulation and cover boards to substrate, and acceptable to roofing system manufacturer.

C. Full-Spread Applied Insulation Adhesive: Insulation manufacturer's recommended spray-applied, low-rise, two-component urethane adhesive formulated to attach roof insulation to substrate or to another insulation layer.

D. Cover Board: Provide one of the following:

1. ASTM C 1177/C 1177M, glass-mat, water-resistant gypsum substrate, 1/4 inch (6 mm) thick.

a. Products: Subject to compliance with requirements, provide one of the following:
b. CertainTeed Corporation; GlasRoc Sheathing Type X.
c. Georgia-Pacific Corporation; Dens Deck Prime.

d. National Gypsum Company; Gold Bond eXP Extended Exposure Sheathing.
e. USG Corporation; Securock Glass Mat Roof Board.

2. High density, closed-cell polyisocyanure foam core cover board. ½-inch thick. HCFC-free blowing agent. R-value: 2.5. Factory Mutual Global, severe rating.

a. Elevate; Holcim Building Envelope; Isogard HD Cover Board.
b. GAF EnergyGuard High-Density ISO Cover Board.
c. Hunter Panels, H-Shield HD.
d. Carlisle Syntec Systems, SecurShield HD Plus Polyiso.

2.06 ROOFTOP RUBBER SUPPORT SYSTEM

A. General: Furnish rooftop rubber support system for mounting conduit to protect membrane roofing.

B. Provide the following or similar: Rubberform; rubber roof blocks.

PART 3 - EXECUTION

3.01 EXAMINATION

A. Examine substrates, areas, and conditions, with Installer present, for compliance with the following requirements and other conditions affecting performance of roofing system:

1. Verify that roof openings and penetrations are in place and curbs are set and braced and that roof drain bodies are securely clamped in place.
2. Verify that wood blocking, curbs, and nailers are securely anchored to roof deck at penetrations and terminations and that nailers match thicknesses of insulation.
3. Verify that surface plane flatness and fastening of steel roof deck complies with requirements in Division 05 Section "Steel Decking."
4. Verify that minimum concrete drying period recommended by roofing system manufacturer has passed.
5. Verify that concrete substrate is visibly dry and free of moisture. Test for capillary moisture by plastic sheet method according to ASTM D 4263.
6. Verify that concrete curing compounds that will impair adhesion of roofing components to roof deck have been removed.

B. Proceed with installation only after unsatisfactory conditions have been corrected.

3.02 PREPARATION

A. Clean substrate of dust, debris, moisture, and other substances detrimental to roofing installation according to roofing system manufacturer's written instructions. Remove sharp projections.

B. Prevent materials from entering and clogging roof drains and conductors and from spilling or migrating onto surfaces of other construction. Remove roof-drain plugs when no work is taking place or when rain is forecast.

C. Complete terminations and base flashings and provide temporary seals to prevent water from entering completed sections of roofing system at the end of the workday or when rain

is forecast. Remove and discard temporary seals before beginning work on adjoining roofing.

~~3.03 SUBSTRATE BOARD~~

~~A. Install substrate board with long joints in continuous straight lines, perpendicular to roof slopes with end joints staggered between rows. Tightly butt substrate boards together.~~

~~1. Fasten substrate board to top flanges of steel deck according to recommendations in FM Approvals' "RoofNav" and FM Global Loss Prevention Data Sheet 1-29 for specified Windstorm Resistance Classification.~~

~~2. Fasten substrate board to top flanges of steel deck to resist uplift pressure at corners, perimeter, and field of roof according to membrane roofing system manufacturers' written instructions.~~

3.03 VAPOR RETARDER

A. Install Vapor Retarder in temperatures 14°F (-10°C) and above.

B. Do not install Vapor Retarder when it is raining, snowing, or on wet/humid surfaces.

C. Not intended to perform under ponding water conditions. Positive drainage is required.

D. Protect Vapor Retarder from potential damage caused by construction traffic and other jobsite activities.

E. Application to all substrates except steel require priming with suitable primer product.

F. Overlap each sheet by 3" (7.6 cm) on the side lap and 6" (15.2 cm) on the end laps. Priming laps may be required at cold temperatures.

G. On steel decks install a 6" x 42" (15.2 cm x 1.1 m) metal plate under the end lap to support the membrane between the steel flutes. Stagger the end laps by at least 12" (30.5 cm).

H. Use a minimum 75 lb (34 kg) steel roller to press the Vapor Retarder onto the substrate including the laps. Use the roller to push out any air bubbles out to the edge of the membrane. Do not cut the membrane to remove a bubble.

3.04 INSULATION INSTALLATION

A. Coordinate installing membrane roofing system components so insulation is not exposed to precipitation or left exposed at the end of the workday.

B. Comply with membrane roofing system and insulation manufacturer's written instructions for installing roof insulation.

C. Install tapered insulation under area of roofing to conform to slopes indicated.

D. Install insulation under area of roofing to achieve required thickness. Where overall insulation thickness is 2.7 inches (68 mm) or greater, install two or more layers with joints

of each succeeding layer staggered from joints of previous layer a minimum of 6 inches (150 mm) in each direction.

E. Trim surface of insulation where necessary at roof drains so completed surface is flush and does not restrict flow of water.

F. Install insulation with long joints of insulation in a continuous straight line with end joints staggered between rows, abutting edges and ends between boards. Fill gaps exceeding 1/4 inch (6 mm) with insulation.

1. Cut and fit insulation within 1/4 inch (6 mm) of nailers, projections, and penetrations.

G. Mechanically Fastened Insulation: Install insulation to deck using mechanical fasteners specifically designed and sized for fastening specified board-type roof insulation to deck type.

1. Locate end joints over crests of decking.
2. Fasten insulation according to requirements in FM Approvals' "RoofNav" for specified Windstorm Resistance Classification.
3. Fasten insulation to resist uplift pressure at corners, perimeter, and field of roof.
4. Make joints between adjacent insulation boards not more than 1/4 inch (6 mm) in width.
5. At internal roof drains, slope insulation to create a square drain sump with each side equal to the diameter of the drain bowl plus 24 inches (610 mm).
6. Trim insulation so that water flow is unrestricted.
7. Fill gaps exceeding 1/4 inch (6 mm) with insulation.
8. Insulation can be installed with a common fastener.

H. Adhere cover boards over insulation with full spread adhesive with long joints in continuous straight lines with end joints staggered between rows. Offset joints of insulation below a minimum of 6 inches (150 mm) in each direction.

3.05 ADHERED MEMBRANE ROOFING INSTALLATION

A. Adhere membrane roofing over area to receive roofing and install according to membrane roofing system manufacturer's written instructions. Install sheet according to ASTM D 5036.

B. Start installation of membrane roofing in presence of membrane roofing system manufacturer's technical personnel.

C. Accurately align membrane roofing and maintain uniform side and end laps of minimum dimensions required by manufacturer. Stagger end laps.

D. Bonding Adhesive: Apply to substrate and underside of membrane roofing at rate required by manufacturer and allow to partially dry before installing membrane roofing. Do not apply to splice area of membrane roofing.

E. In addition to adhering, mechanically fasten membrane roofing securely at terminations, penetrations, and perimeter of roofing.

F. Apply membrane roofing with side laps shingled with slope of roof deck where possible.

G. Seams: Clean seam areas, overlap membrane roofing, and hot-air weld side and end laps of membrane roofing and sheet flashings according to manufacturer's written instructions to ensure a watertight seam installation.

1. Test lap edges with probe to verify seam weld continuity. Apply lap sealant to seal cut edges of sheet membrane.
2. Verify field strength of seams a minimum of twice daily and repair seam sample areas.
3. Repair tears, voids, and lapped seams in roofing that does not comply with requirements.

H. Spread sealant bed over deck drain flange at roof drains and securely seal membrane roofing in place with clamping ring.

3.06 BASE FLASHING INSTALLATION

A. Install sheet flashings and preformed flashing accessories and adhere to substrates according to membrane roofing system manufacturer's written instructions.

B. Apply bonding adhesive to substrate and underside of sheet flashing at required rate and allow to partially dry. Do not apply to seam area of flashing.

C. Flash penetrations and field-formed inside and outside corners with cured or uncured sheet flashing.

D. Clean seam areas, overlap, and firmly roll sheet flashings into the adhesive. Hot-air weld side and end laps to ensure a watertight seam installation.

E. Terminate and seal top of sheet flashings and mechanically anchor to substrate through termination bars.

3.07 FIELD QUALITY CONTROL

A. Testing Agency: Engage a qualified testing agency to perform tests and inspections.

B. Final Roof Inspection: Arrange for roofing system manufacturer's technical personnel to inspect roofing installation on completion.

C. Repair or remove and replace components of membrane roofing system where inspections indicate that they do not comply with specified requirements.

D. Additional inspections, at Contractor's expense, will be performed to determine compliance of replaced or additional work with specified requirements.

3.08 PROTECTING AND CLEANING

A. Protect membrane roofing system from damage and wear during remainder of construction period. When remaining construction will not affect or endanger roofing, inspect roofing for deterioration and damage, describing its nature and extent in a written report, with copies to Architect and Owner.

B. Correct deficiencies in or remove membrane roofing system that does not comply with requirements; repair substrates; and repair or reinstall membrane roofing system to a

condition free of damage and deterioration at time of Substantial Completion and according to warranty requirements.

C. Clean overspray and spillage from adjacent construction using cleaning agents and procedures recommended by manufacturer of affected construction.

END OF SECTION

131962 OPT0423410

V3 5/23/2025 vs. V6 6/17/2025

Hardware Group No. 48

For use on Door #(s):
168-1

Provide each OPENING with the following:

QTY		DESCRIPTION	CATALOG NUMBER	FINISH	MFR
1	EA	CONT. HINGE	112XY	628	IVE
1	EA	INSTITUTION LOCK	L9082BDC 17B	626	SCH
2	EA	PERMANENT CORE	BEST - MATCH EXISTING SYSTEM	626	BES
1	EA	ELECTRIC STRIKE	6400 FSE 12/24 VAC/VDC	630	VON
1	EA	OH STOP	100S	630	GLY
1	EA	SURFACE CLOSER	4040XP REG ST-1630 TBWMS	689	LCN
1	EA	MOUNTING PLATE	4040XP-18TJ	689	LCN
1	EA	KICK PLATE	8400 10"H X WIDTH AS REQ'D B-CS	630	IVE
1 ~~(2)~~	EA	CREDENTIAL READER	MT SERIES - BY ACCESS CONTROL INTEGRATOR (COORDINATE W/ HEAD END AND CREDENTIAL TYPE)	BLK	SCE
1	EA	REMOTE PUSH BUTTON RELEASE	BY OWNER'S ACCESS CONTROL INTEGRATOR		B/O
1	EA	MOTION SENSOR	XMS	WHT	SEC
1	EA	POWER SUPPLY	PS902 120/240 VAC	LGR	SCE

- SCHOOL/CORRIDOR SIDE MOTION SENSOR CONTROLLED BY ACCESS CONTROL SYSTEM SCHEDULE AND LOCKDOWN SYSTEM.
- OFFICE HOURS: PRESENTING VALID CREDENTIAL TO READER ON OFFICE SIDE, OR REMOTE PUSH BUTTON, RELEASES ELEC STRIKE ALLOWING ACCESS INTO THE SCHOOL. APPROACHING DOOR ON SCHOOL/CORRIDOR SIDE ALLOWS FREE ENTRY INTO OFFICE VIA ACTIVATED MOTION SENSOR.
AFTER HOURS/LOCKDOWN: SCHOOL/CORRIDOR SIDE MOTION SENSOR DEACTIVATED AND DOOR LOCKED IN BOTH DIRECTIONS. PRESENTING VALID CREDENTIAL TO READER ON **OFFICE** ~~**EITHER**~~ SIDE, OR REMOTE PUSH BUTTON, RELEASES ELEC STRIKE ALLOWING ACCESS IN EITHER DIRECITON.
- OPENING REMAINS LOCKED IN BOTH DIRECTIONS WITH LOSS OF POWER.

HARDWARE GROUP NO. 50

For use on Door #(s):
V103-1 ~~V103-1~~

Provide each OPENING with the following:

QTY		DESCRIPTION	CATALOG NUMBER	FINISH	MFR
1	EA	CONT. HINGE	112XY EPT	628	IVE
1	EA	POWER TRANSFER	EPT10	689	VON
1	EA	ELEC PANIC HARDWARE	LX-RX-QEL-99-NL 24 VDC	626	VON
1	EA	RIM CYL HOUSING (SFIC)	80-159 (W/ KEYED CONST CORE)	626	SCH
1	EA	PERMANENT CORE (SFIC EVEREST)	80-037 EV29 R	626	SCH
1	EA	OH STOP	100S	630	GLY
1	EA	SURFACE CLOSER	4040XP EDA TBWMS	689	LCN
1	EA	SURF. AUTO OPERATOR	4642 TBWMS 120 VAC	689	LCN
1	EA	MOUNTING PLATE	4040XP-18PA	689	LCN
1	EA	BLADE STOP SPACER	4040XP-61	689	LCN
2	EA	ACTUATOR	8310-818T (JAMB MOUNT)	630	LCN
1	EA	WEATHERSTRIPPING	BY DOOR/FRAME MANUFACTURER		B/O
1	EA	DOOR SWEEP, BRUSH W/ DRIP	8198AA	AA	ZER
1	EA	THRESHOLD, 1/2"	655A	A	ZER
1	EA	CREDENTIAL READER	MT SERIES - BY ACCESS CONTROL INTEGRATOR (COORDINATE W/ HEAD END AND CREDENTIAL TYPE)	BLK	SCE
1	EA	DOOR CONTACT	679 SERIES	BLK	SCE
1	EA	POWER SUPPLY	PS902 900-4RL 120/240 VAC	LGR	SCE

DOOR(S) NORMALLY CLOSED AND LOCKED AND EXTERIOR ACTUATOR DISABLED. PRESENTING VALID CREDENTIAL TO READER RETRACTS EXIT DEVICE LATCH AND ENABLES EXTERIOR ACTUATOR. PUSHING ENABLED EXTERIOR ACTUATOR SIGNALS AUTOMATIC OPERATOR TO OPEN DOOR. INTERIOR ACTUATOR ENABLED AT ALL TIMES. PUSHING INTERIOR ACTUATOR RETRACTS LATCH AND SIGNALS AUTOMATIC OPERATOR TO OPEN DOOR. EXIT DEVICE LATCH ALSO CAPABLE OF BEING ELECTRONICALLY DOGGED DOWN (I.E. PUSH/PULL MODE) AS DESIGNATED BY ACCESS CONTROL SYSTEM SCHEDULE. EXIT DEVICE LATCHES AND LOCKS WITH LOSS OF POWER. FREE EGRESS AT ALL TIMES.

Hardware Group No.57A

For use on Door #(s):
V101-5

Provide each OPENING with the following:

QTY		DESCRIPTION	CATALOG NUMBER	FINISH	MFR
2	EA	CONT. HINGE	224XY EPT	628	IVE
2	EA	POWER TRANSFER	EPT10	689	VON
1	EA	REMOVABLE MULLION	KR4954 STAB	689	VON
1	EA	ELEC PANIC HARDWARE	RX-QEL-99-DT 24 VDC	626	VON
1	EA	ELEC PANIC HARDWARE	RX-QEL-99-NL 24 VDC	626	VON
2	EA	PERMANENT CORE	BEST - MATCH EXISTING SYSTEM	626	BES
1	EA	MORTISE CYL HOUSING (SFIC)	80-110 (W/ DISP CONST CORE)	626	SCH
1	EA	RIM CYL HOUSING (SFIC)	80-159 (W/ KEYED CONST CORE)	626	SCH
2	EA	SURFACE CLOSER (W/ DEAD STOP)	4040XP CUSH TBWMS	689	LCN
2	EA	CUSH SHOE SUPPORT	4040XP-30	689	LCN
2	EA	BLADE STOP SPACER	4040XP-61	689	LCN
2	EA	KICK PLATE	8400 10"H X WIDTH AS REQ'D B-CS	630	IVE
1	EA	MULLION SEAL	8780NBK PSA	BK	ZER
1	EA	CREDENTIAL READER	MT SERIES - BY ACCESS CONTROL INTEGRATOR (COORDINATE W/ HEAD END AND CREDENTIAL TYPE)	BLK	SCE
1	EA	POWER SUPPLY	PS902 900-2RS 120/240 VAC	LGR	SCE

DOOR(S) NORMALLY CLOSED AND LOCKED. PRESENTING VALID CREDENTIAL TO READER RETRACTS EXIT DEVICE LATCH ALLOWING ACCESS. EXIT DEVICE(S) CAPABLE OF BEING ELECTRONICALLY DOGGED DOWN (I.E. PUSH/PULL MODE) AS DESIGNATED BY ACCESS CONTROL SYSTEM SCHEDULE. EXIT DEVICE(S) LATCH AND LOCK WITH LOSS OF POWER. FREE EGRESS AT ALL TIMES.

Hardware Group No. 59

For use on Door #(s):
S103-3 S104-3 S105-3 S106-3 ~~V101-5~~ V102-1
V104-1

Provide each OPENING with the following:

QTY		DESCRIPTION	CATALOG NUMBER	FINISH	MFR
2	EA	CONT. HINGE	112XY EPT	628	IVE
2	EA	POWER TRANSFER	EPT10	689	VON
1	EA	REMOVABLE MULLION	KR4954 STAB	689	VON
1	EA	ELEC PANIC HARDWARE	RX-QEL-99-DT 24 VDC	626	VON
1	EA	ELEC PANIC HARDWARE	RX-QEL-99-NL 24 VDC	626	VON
1	EA	PERMANENT CORE	BEST - MATCH EXISTING SYSTEM (MULLION)	626	BES
1	EA	MORTISE CYL HOUSING (SFIC)	80-110 (W/ DISP CONST CORE)	626	SCH
1	EA	RIM CYL HOUSING (SFIC)	80-159 (W/ KEYED CONST CORE)	626	SCH
1	EA	PERMANENT CORE (SFIC EVEREST)	80-037 EV29 R (EXTERIOR)	626	SCH
2	EA	OH STOP	100S	630	GLY
2	EA	SURFACE CLOSER	4040XP EDA TBWMS	689	LCN
2	EA	MOUNTING PLATE	4040XP-18PA	689	LCN
2	EA	BLADE STOP SPACER	4040XP-61	689	LCN
1	EA	MULLION SEAL	8780NBK PSA	BK	ZER
1	EA	WEATHERSTRIPPING	BY DOOR/FRAME MANUFACTURER		B/O
2	EA	DOOR SWEEP, BRUSH W/ DRIP	8198AA	AA	ZER
1	EA	THRESHOLD, 1/2"	655A	A	ZER
1	EA	CREDENTIAL READER	MT SERIES - BY ACCESS CONTROL INTEGRATOR (COORDINATE W/ HEAD END AND CREDENTIAL TYPE)	BLK	SCE
2	EA	DOOR CONTACT	679 SERIES	BLK	SCE
1	EA	POWER SUPPLY	PS902 900-2RS 120/240 VAC	LGR	SCE

DOOR(S) NORMALLY CLOSED AND LOCKED. PRESENTING VALID CREDENTIAL TO READER RETRACTS EXIT DEVICE LATCH ALLOWING ACCESS. EXIT DEVICE(S) CAPABLE OF BEING ELECTRONICALLY DOGGED DOWN (I.E. PUSH/PULL MODE) AS DESIGNATED BY ACCESS CONTROL SYSTEM SCHEDULE. EXIT DEVICE(S) LATCH AND LOCK WITH LOSS OF POWER. FREE EGRESS AT ALL TIMES.

HARDWARE GROUP NO. 60

For use on Door #(s):
V101-2 V103-2 ~~V103-2~~

Provide each OPENING with the following:

QTY		DESCRIPTION	CATALOG NUMBER	FINISH	MFR
2	EA	CONT. HINGE	112XY EPT	628	IVE
2	EA	POWER TRANSFER	EPT10	689	VON
1	EA	REMOVABLE MULLION	KR4954 STAB	689	VON
2	EA	ELEC PANIC HARDWARE	RX-QEL-99-DT 24 VDC	626	VON
1	EA	PERMANENT CORE	BEST - MATCH EXISTING SYSTEM	626	BES
1	EA	MORTISE CYL HOUSING (SFIC)	80-110 (W/ DISP CONST CORE)	626	SCH
2	EA	OH STOP	100S	630	GLY
2	EA	SURFACE CLOSER	4040XP EDA TBWMS	689	LCN
2	EA	MOUNTING PLATE	4040XP-18PA	689	LCN
2	EA	BLADE STOP SPACER	4040XP-61	689	LCN
1	EA	MULLION SEAL	8780NBK PSA	BK	ZER
1	EA	WEATHERSTRIPPING	BY DOOR/FRAME MANUFACTURER		B/O
2	EA	DOOR SWEEP, BRUSH W/ DRIP	8198AA	AA	ZER
1	EA	THRESHOLD, 1/2"	655A	A	ZER
2	EA	DOOR CONTACT	679 SERIES	BLK	SCE
1	EA	POWER SUPPLY	PS902 900-2RS 120/240 VAC	LGR	SCE

EXIT DEVICE LATCH CAPABLE OF BEING ELECTRONICALLY DOGGED DOWN (I.E. PUSH/PULL MODE) AS DESIGNATED BY ACCESS CONTROL SYSTEM SCHEDULE. EXIT DEVICE LATCHES AND LOCKS WITH LOSS OF POWER. FREE EGRESS AT ALL TIMES.

DR#	HS#	INFORMATION
100A-1	52	CR
100A-2	52	CR
100B-1	52	CR
100B-2	52	CR
101-1	21	
101-2	21	
101A-1	28	
101A-2	29	
101B-1	28	
101B-2	28	
101C	07	
101D	07	
102-1	20	
102-2	16	DPS ONLY, STC (DBL KEYED)
103	35	
103A	35	
104	20	
104A-1	29	
104A-2	28	
104B-1	28	
104B-2	28	
104C	07	
104D	07	
105	20	
106	20	
106A-1	28	
106A-2	29	
106B-1	28	
106B-2	28	
106C	07	
106D	07	
107	21	
108	35	
108A	35	
109-1	21	
109-2	26	DPS ONLY, STC
109A	28	
109B	29	
109C	07	
110	11	
111-1	35	
111-2	65	
112	36	
113	36	

DR#	HS#	INFORMATION
114	47	
115	35	
116	35	
117	11	
117A	19	
118	23	SOUND SEALS
119-1	23	SOUND SEALS
119-2	23	SOUND SEALS
119A	28	
121	21	
121B	29	
122	11	
123-1	21	
123-2	17	
125	33	
126	36	
127	47	
128	21	
129	36	
130-1	21	
130-2	21	
130A-1	28	
130A-2	29	
130B-1	28	
130B-2	28	
130C	07	
130D	07	
131-1	20	
131-2	16	DPS ONLY, STC (DBL KEYED)
132	35	
132A	35	
133	20	
133A-1	29	
133A-2	28	
133B-1	28	
133B-2	28	
133C	07	
133D	07	
134	20	
135	20	
135A-1	28	
135A-2	29	
135B-1	28	
135B-2	28	

DR#	HS#	INFORMATION
135C	07	
135D	07	
136	20	
137	35	
137A	35	
138-1	21	
138-2	16	DPS ONLY, STC (DBL KEYED)
138A	28	
138B	29	
138C	07	
139	11	
140-1	21	
140-2	32	CR
140A	29	
140B	28	
141	21	
142	08	
143-1	13	
143-2	12	
144	25	
145	11	
146-1	11	
146-2	10	
146A	09	
146B	19	
147	06	
148	11	
149	35	
150	11	
151	11	
152	11	
153-1	11	
153-2	11	
154	19	
157	08	
158	65	
159	11	
161	36	
162	11	
163	19	
164	36	
165	11	
166-1	11	
166-2	31	CR

DR#	HS#	INFORMATION
167	35	
168-1	48	CR, PBR (BY DIV 28)
168-2	31	CR,
168-3	14	
169	08	
170	65	
170A	65	
170B	65	
171-1	61	
171-1	61	
171-2	55	
171-3	55	
171A	29	
172-1	54	
172-1	54	
172-2	62	
172-2	62	
172A	39	
172B	11	
172C	08	
173-1	66	
173-2	34	
174-1	03	
174-2	66	
175	43	
175B	18	
176	11	
177	35	
178	04	
179-1	44	
179-2	38	DPS ONLY
180	08	
181-1	42	CR
181-2	43	
182	37	
182	37	
183	11	
184	40	
186	36	
187	41	
200A-1	05	DPS ONLY
200A-2	05	DPS ONLY
200B-1	05	DPS ONLY
200B-2	05	DPS ONLY
201-1	21	

DR#	HS#	INFORMATION
201-2	21	
201A-1	28	
201A-2	29	
201B-1	28	
201B-2	28	
201C	07	
201D	07	
202	20	
203	33	
203A-1	65	
203A-2	35	
204	20	
204A-1	29	
204A-2	28	
204B-1	28	
204B-2	28	
204C	07	
204D	07	
205	20	
206	20	
206A-1	28	
206A-2	29	
206B-1	28	
206B-2	28	
206C	07	
206D	07	
207	21	
208	33	
208A-1	65	
208A-2	35	
209-1	21	
209-2	15	DPS ONLY (DBL KEYED)
209A	28	
209B	29	
209C	07	
210	11	
211	35	
212	36	
213	36	
214	47	
215	24	
216	11	
216A	19	
217	21	
217	21	

DR#	HS#	INFORMATION
218	13	
219	46	
220	21	
221	35	
222	45	
223	21	
223A	11	
225	35	
226	36	
227	47	
229	36	
230-1	21	
230-2	21	
230A-1	28	
230A-2	29	
230B-1	28	
230B-2	28	
230C	07	
230D	07	
231	20	
232	33	
232A-1	65	
232A-2	35	
233	20	
233A-1	29	
233A-2	28	
233B-1	28	
233B-2	28	
233C	07	
233D	07	
234	20	
235	20	
235A-1	28	
235A-2	29	
235B-1	28	
235B-2	28	
235C	07	
235D	07	
236	20	
237	33	
237A-1	65	
237A-2	35	
238-1	21	
238-2	22	DPS ONLY
238A	28	

DR#	HS#	INFORMATION
238B	29	
238C	07	
239	11	
C102	63	ELEC HO
C103	63	ELEC HO
C202	63	ELEC HO
C203	63	ELEC HO
OD100-1	27	
OD100-2	27	
S103-1	65	
S103-2	01	
S103-3	59	CR
S104-1	65	
S104-2	01	
S104-3	59	CR
S105-1	65	
S105-2	01	
S105-3	59	CR
S106-1	65	
S106-2	01	
S106-3	59	CR
S203	01	
S204	01	
S205	01	
S206	01	
V101-1	58	CR, AO
V101-2	60	CONTROLLED
V101-3	49	CR, AO
V101-4	56	CONTROLLED
V101-5	**57A** ~~**59**~~	CR
V102-1	59	CR
V102-2	02	
V102-3	25	
V103-1	50	CR, AO
~~**V103-1**~~	~~**50**~~	~~**CR, AO**~~
V103-2	60	CONTROLLED
~~**V103-2**~~	~~**60**~~	~~**CONTROLLED**~~
V103-3	51	CONTROLLED
V103-4	53	DPS ONLY
V103-5	57	CR, AO
V103-6	30	CR, PBR (BY DIV 28)
V104-1	59	CR
V104-2	64	

DR#	HS#	INFORMATION
V104-3	43	

SECTION 11 68 00 –PLAYGROUND EQUIPMENT

PART 1 - GENERAL

A. Drawings and general provisions of the Contract, including General and Supplementary Conditions and Division 1 Specification Sections, apply to this Section.

1.2 SUMMARY

A. This Section includes playground equipment consisting of the following type of play structures:
   1. Boulder, Small
   2. Stump Climber, Large
   3. Stump Climber, Small
   4. Tree Climber
   5. Spinner Bowl
   6. Custom Robinia Log Tower
   7. Spica
   8. Poured in Place Orbs
   9. Bee Springer
   10. Snail Springer
   11. Spinner Plate
   12. Log Balance Beam
   13. Carousel with Seats
   14. 3 Bay Robinia Swings with 6 Belts
   15. 3 Bay Robinia Swings with 5 Belts and 1 ADA Bucket
   16. Play House
   17. Flower Chimes
   18. Triple Wonder Play Panel
   19. Basketball Goals
   20. GaGa Pits

B. Related Sections include the following:
   1. Division 1 Section "Summary of Work" for Owner Provided Equipment.
   2. Division 3 Section "Cast-in-Place Concrete" for concrete footings
   3. Division 31 Section "Earth Moving" for excavation and grading work.
   4. Division 32 Section "Playground Protective Surfacing" for playground surface.

1.3 DEFINITIONS

A. Composite Play Structures: According to ASTM F 1487, this means "two or more play structures, attached or functionally linked," creating one integral unit with more than one play activity.

B. Critical Height: Standard measure of shock attenuation. According to CPSC No. 325, this means "the fall height below which a life-threatening head injury would not be expected to occur."

C. Fall Height: According to ASTM F 1487, this means "the vertical distance between a designated play surface and the protective surfacing beneath it." The fall height of playground equipment should not exceed the Critical Height of the protective surfacing beneath it.

D. HDPE: High-density polyethylene.

E. IPEMA: International Play Equipment Manufacturers Association.

F. MDPE: Medium-density polyethylene.

G. Play Structure: According to ASTM F 1487, this is "a free-standing structure with one or more components and their supporting members."

H. Protective Surfacing: According to ASTM F 1487, this means impact-attenuating "materials to be used within the use zone of any playground equipment" for playground surface systems.

I. PVC: Polyvinyl chloride.

J. Transfer Point: According to ASTM F 1487, this is "a platform or deck along an accessible route of travel or an accessible platform provided to allow a child in a wheelchair to transfer from the chair onto the equipment."

K. Use Zone: According to ASTM F 1487, this is "the area beneath and immediately adjacent to a play structure that is designated for unrestricted circulation around the equipment and on whose surface it is predicted that a user would land when falling from or exiting the equipment."

1.4 SUBMITTALS

A. Coordination Drawings: Layout plans and elevations drawn to scale and coordinating playground equipment with playground surface systems. Show playground equipment locations, use zones, fall heights, extent of protective surfacing, and Critical Heights.

B. Installer Certificates: Signed by manufacturer certifying that installers comply with requirements.

C. Manufacturer Certificates: Signed by manufacturers certifying that they comply with requirements.

D. Material Certificates: Signed by manufacturers certifying that each of the following items complies with requirements:

1. Paints and similar finishes.
2. Recycled plastic.

E. Product Test Reports: From a qualified testing agency indicating playground equipment complies with requirements, based on comprehensive testing of current products.

F. Field Quality-Control Report: Indicate compliance of playground and installed playground equipment and components with requirements.

G. Maintenance Data: For playground equipment and finishes to include in maintenance manuals specified in Division 1.

1.5 QUALITY ASSURANCE

A. Installer Qualifications: An experienced installer who has specialized in installing work similar in material, design, and extent to that indicated for this Project and who is acceptable to manufacturer of playground equipment.

B. Manufacturer Qualifications: A firm whose playground equipment components meet or exceed the latest requirements as published in ASTM F 1487-95 Standard Consumer Safety Product Performance for Playground Equipment for Public Use.

C. Testing Agency Qualifications: An independent testing agency with the experience and capability to conduct the testing indicated, as documented according to ASTM E 548.

D. Standards and Guidelines: Provide playground equipment and resilient surfacing complying with or exceeding requirements in the following:

1. ASTM F 1487.
2. CPSC No. 325, "Handbook for Public Playground Safety."
3. Label play structures with warning label and manufacturer's identification per ASTM F 1487.
4. ASTM F 1292-13 and F 1951.

1.6 COORDINATION

A. Coordinate construction of equipment use zones and fall heights during installation of playground equipment with installation of protective surfacing specified herein. Sequence work so protective surfacing can be installed immediately after concrete footings have set.

PART 2 - PRODUCTS

2.1 PRODUCTS

A. Products: Subject to compliance with requirements, provide and install complete play features as follows:
1. <u>Boulder - Small</u>
   a. NaturePlay Boulder – Small, as manufactured by Burke., Fond du Lac, WI,54937, Snider Recreation, Phone: 812.373.6427, or approved equal prior to bidding.
   b. Approved Equal – The Pointe Rock Climber, as manufactured by Landscape Structures, PlayPros, Phone: 502.395.3234.
2. <u>Stump Climber, Large</u>
   a. NaturePlay Stump – Large, as manufactured by Burke., Fond du Lac, WI 54937, Snider Recreation, Phone: 812.373.6427, or approved equal prior to bidding.
   b. Approved Equal – Log Stepper 18", as manufactured by Landscape Structures, PlayPros, Phone: 502.395.3234.
   c.
3. <u>Stump Climber, Small</u>
   a. NaturePlay Stump – Small, as manufactured by Burke., Fond du Lac, WI 54937, Snider Recreation, Phone: 812.373.6427, or approved equal prior to bidding.
   b. Approved Equal – The Stepper Rock Climber, as manufactured by Landscape Structures, PlayPros, Phone: 502.395.3234.

4. Tree Climber
   a. Tree Climber, Model #NRO824-1001 as manufactured by Kompan Inc., Tacoma, WA 98402, Recreation InSites, Phone: 317.201.7056, or approved equal prior to bidding.
5. Spinner Bowl
   a. Spinner Bowl, Model #ELE400024 as manufactured by Kompan Inc., Tacoma, WA 98402, Recreation InSites, Phone: 317.201.7056, or approved equal prior to bidding.
6. Robinia Log Tower
   a. Custom Robinia Log Tower, Model #KRS8200786-ASTM, as manufactured by Kompan Inc., Tacoma, WA 98402, Recreation InSites, Phone: 317.201.7056, or approved equal prior to bidding.
7. Spica
   a. Spica 1 Model #GXY8014 as manufactured by Kompan Inc., Tacoma, WA 98402, Recreation InSites, Phone: 317.201.7056, or approved equal prior to bidding.
8. Poured in Place Orbs
   a. EUROFLEX® Half Balls: (6) 500mm EDPM and (3) 695mm EDPM, as manufactured by EUROFLEX®, Recreation InSites Phone: 317.201.7056, or approved equal prior to bidding.
   b. AQUASEAL Half Play Sphere (6) 24” Half Play Sphere and (3) 30” Half Play Sphere, as manufacturered by AQUASEAL, PlayPros Phone: 502.395.3234, or approved equal prior to bidding.
9. Bee Springer
   a. Bee Springer Model #NRO118-0421 as manufactured by Kompan Inc., Tacoma, WA 98402, Phone: 317.201.7056, or approved equal prior to bidding.
10. Snail Springer
    a. Snail Springer Model #NRO1158-0401 as manufactured by Kompan Inc., Tacoma, WA 98402, Phone: 317.201.7056, or approved equal prior to bidding.
11. Spinner Plate
    a. Spinner Plate Model #NRO110 as manufactured by Kompan Inc., Tacoma, WA 98402, Recreation InSites, Phone: 317.201.7056, or approved equal prior to bidding.
12. Balance Beam
    a. Log Balance Beam Model #173596 as manufactured by Landscape Structures, Delano, MN 55328, PlayPros Phone 502.395.3234, or approved equal prior to bidding.
    b. Approved Equal: Single Balance Beam Model #NRO887, as manufactured by Kompan. Contact Recreation Insites, Fishers, IN. Phone: 317.617.1740.
13. Carousel with Seats
    a. Carousel with Seats Model #NRO120-0901 as manufactured by Kompan Inc., Tacoma, WA 98402, Recreation InSites, Phone: 317.201.7056, or approved equal prior to bidding.
14. 3 Bay Robinia Swings with 6 Belts
    a. 3 Bay Robinia Swings with 6 Belt Seats Model #NRO926-20367475 as manufactured by Kompan Inc., Tacoma, WA 98402, Recreation InSites, Phone: 317.201.7056, or approved equal prior to bidding.
15. 3 Bay Robinia Swings with 5 Belts and 1 ADA Bucket
    a. 3 Bay Robinia Swings with 6 Belt Seats Model #NRO926-20344480 as manufactured by Kompan Inc., Tacoma, WA 98402, Recreation InSites, Phone: 317.201.7056, or approved equal prior to bidding.
16. Play House
    a. Village Shop Model #NRO404-0621 as manufactured by Kompan Inc., Tacoma, WA 98402, Recreation InSites, Phone: 317.201.7056, or approved equal prior to bidding.
17. Flower Chimes

a. Freenotes Flower Chimes (1) Tall Model #FWR-I-IG and (2) Short Model #FWR-I-IG-T, as manufactured by Freenotes Harmony Park, Chattanooga, TN 37402, Phone: 833.262.1569, or approved equal prior to bidding.

18. Triple Wonder Play Panel
    a. Triple Wonder Play Panel #NRC60201-1021 as manufactured by Kompan Inc., Tacoma, WA 98402, Recreation InSites, Phone: 317.201.7056, or approved equal prior to bidding.

19. Basketball Goals:
    a. Gared Sports, Noblesville, IN 46060; 1-800-325-2682. Model #GP105PC72 Endurance Playground System, 6” Square Post, 5’ Extension, BB72P50 Polycarbonate Backboard, 8800 Goal, or approved equal prior to bidding.
20. GaGa Pits:
    a. GaGa Pit A: Model Octagon 30"H, GaGa Ball Pit Wall Top Covers and GaGa Ball Pit ADA Doorway as manufactured by Coach Cliff's Gaga Pits, Waukegan, IL 60085, Phone 877-266-8426, or approved equal prior to bidding
    b. Gaga Pit B: Model Octagon 24"H, GaGa Ball Pit Wall Top Covers as manufactured by Coach Cliff's Gaga Pits, Waukegan, IL 60085, Phone 877-266-8426, or approved equal prior to bidding

B. Basis-of-design:

C. Numerous manufacturers offer comparable products and are encouraged to offer an equal product as part of the bidding process. Provide full product literature and ensure all quality standards demonstrated by the basis-of-design product are met or exceeded.

2.2 MATERIALS

A. Aluminum: Alloy and temper recommended by aluminum producer and finisher for type of use and finish indicated and to comply with performance requirements for structural aluminum; mill finish or decorative baked-enamel powder-coat finish.

1. Extruded Bars, Profiles, and Tubes: ASTM B 221 (ASTM B 221M).

    a. Tubing: Minimum yield strength of 35,000 lbf/sq. in. (241 MPa) and minimum tensile strength of 38,000 lbf/sq. in. (262 MPa).

2. Cast Aluminum: ASTM B 179.

B. Steel: Comply with the following:

1. Steel Plates, Shapes, and Bars: ASTM A 36/A 36M, hot-dip galvanized.
2. Steel Pipe: Standard-weight steel pipe complying with ASTM A 53 or electric-resistance-welded pipe complying with ASTM A 135, with a minimum yield strength of 30,000 lbf/sq. in. (205 MPa); hot-dip galvanized internally and externally.
3. Steel Mechanical Tubing: Cold-rolled, electric-resistance-welded carbon or alloy steel tubing complying with ASTM A 513 or steel tubing fabricated from steel complying with ASTM A 569/A 569M and complying with the dimensional tolerances in ASTM A 500; with a minimum yield strength of 40,000 lbf/sq. in. (276 MPa) and a minimum tensile strength of 45,000 lbf/sq. in. (310 MPa); zinc coated internally and externally.

4. Steel Sheet: Commercial steel sheet complying with ASTM A 569/A 569M.
5. Galvanized Steel Sheet: Commercial steel sheet, hot-dip galvanized, complying with ASTM A 653/A 653M for not less than G60 (Z180) coating designation; mill phosphatized.
6. Perforated Metal: From steel sheet not less than 0.0897-inch (2.3-mm) nominal thickness; manufacturer's standard perforation pattern.

C. Opaque Plastic: Color impregnated, UV stabilized, and mold resistant.

1. Polyethylene: Fabricated from virgin plastic resin; rotationally molded MDPE with not less than 1/4-inch (6-mm) wall thickness or molded HDPE.

D. Transparent Plastic: Clear, colorless abrasion-resistant, UV-stabilized monolithic polycarbonate sheet, not less than 3/16 inch (5 mm) thick.

E. Post Caps: Cast aluminum.

F. Platform Clamps and Hangers: Cast aluminum or not less than 0.105-inch- (2.7-mm-) nominal thickness, zinc-plated steel.

G. Hardware: Manufacturer's standard, commercial-quality, corrosion-resistant, hot-dip galvanized steel, stainless steel, or aluminum; secure, vandal-resistant design.

H. Fasteners: Manufacturer's standard, corrosion-resistant, hot-dip galvanized or plated steel, or stainless steel; permanently capped; theft resistant.

I. Drainage Fill: Washed coarse-aggregate mixture of crushed stone, or crushed or uncrushed gravel.

J. Galvanizing: Where indicated for steel components, provide the following protective zinc coating applied to components after fabrication:

1. Zinc-Coated Tubing: External, zinc with organic overcoat, consisting of a minimum of 0.9 oz./sq. ft. (0.27 kg/sq. m) of zinc after welding, a chromate conversion coating, and a clear, polymer film. Internal, same as external or consisting of 81 percent, not less than 0.3-mil- (0.0076-mm-) thick, zinc pigmented coating.
2. Hot-Dip Galvanizing: According to ASTM A 123/A 123M, ASTM A 153/A 153M, or ASTM A 924/A 924M.

K. Paint and PVC-Coat Finish: Comply with 16 CFR 1303 for limiting lead in paint.

2.3 FABRICATION

A. General: Provide sizes, strengths, thicknesses, wall thickness, and weights of components as indicated but not less than required to comply with structural performance and other requirements in ASTM F 1487. Factory drill components for field assembly. Unnecessary holes in components, not required for field assembly, are not permitted. Provide complete play structure, including supporting members and connections, means of access and egress, designated play surfaces, barriers, guardrails, handrails, handholds, and other components indicated or required to comply with referenced standards for equipment indicated.

B. Rung Ladders, Stepladders, Stairways, Ramps, Step Platforms, and Transfer Points: Provide complete means of access and egress, with evenly spaced treads and rungs, easily grasped

handholds, and slip-resistant foot surfaces; fabricated from manufacturer's standard materials complying with requirements indicated and compatible with frame and play surfaces. Provide closed risers and protective barriers if indicated or required by referenced standards.

C. Play Surfaces: Provide elevated decks, platforms, landings, walkways, ramps, and similar transitional play surfaces, designed and framed to withstand loads and allowing for drainage. Fabricate units in manufacturer's standard modular sizes and shapes, to form assembled play surfaces of dimensions indicated on Drawings.

1. Elevated Play Surfaces: Provide protective devices, completely surrounding play surface except for access openings, if play-surface heights above protective surfacing exceed the following for use by age group indicated:

a. Unless otherwise indicated, provide guardrails or protective barriers if play-surface heights above protective surfacing exceed 30 inches (760 mm) and provide protective barriers if play-surface heights above protective surfacing exceed 48 inches (1200 mm).

2. Stepped Play Surfaces: Provide protective infill between stepped platforms according to referenced standards.

D. Protective Barriers: Fabricated from welded metal pipe or tubing with vertical bars and fabricated with any openings within the barrier and between the barrier and the play surface precluding passage of the torso probe according to the most stringent requirements in ASTM F 1487 and CPSC No. 325. Provide barriers designed to minimize the possibility of climbing, free of hand- and footholds, and configured to completely surround the protected area except for access openings. Extend barriers to the following height above the protected elevated surface for use by age group indicated:
1. Top surface not less than 38 inches (970 mm) high.

E. Guardrails: Fabricated from metal pipe or tubing, and wood. Provide guardrails configured to completely surround the protected area except for access openings. Extend guardrails over the following expanse above the protected elevated surface for use by age group indicated:
1. Top surface at not less than 38 inches (970 mm) and lower edge at not more than 28 inches (710 mm).

F. Handrails: Welded metal pipe or tubing, OD 0.125 inch (3.2 mm). Provide handrails at height between the following dimensions for use by age group indicated:

1. 22 to 38 inches (560 to 970 mm).

G. Structural Plastic Slide Chutes: Opaque plastic, unless transparent plastic is indicated.

H. Roofs: Fabricated from metal and wood designed to be positioned overhead and to discourage and minimize climbing by users.

I. Climbing Ropes, Cables, and Chains: Designed to be secured at both ends so length cannot be looped back on itself creating a loop with an inside perimeter greater than 5 inches (127 mm). Ropes, cables, and chains with length 7 inches (178 mm) or less may be attached at one end only.

J. Flexible Climbers: Designed to securely connect flexible-climber components used as access to other components at both ends. For components with one end connected to ground level, provide flexible climbers designed with the anchoring connection to ground placed beneath the base of protective surfacing.

K. Steel Components: Galvanized, galvanized and color coated, or color coated. Bare metal steel components are not permitted.

1. Color-Coated Pipe and Tubing for Component Frames: PVC-coat or baked-enamel powder coat applied to steel or galvanized steel.

2.4 CAST-IN-PLACE CONCRETE

A. Top of concrete footings shall be held 12” below finished grade within all protective play surfacing conditions. Account for any related impacts on overall footing depth to achieve Manufacturer’s recommendations.

B. Concrete Materials and Properties: Dry-packaged concrete mix complying with ASTM C 387 and mixed at the site with potable water, according to manufacturer's written instructions, to produce normal-weight concrete with a minimum 28-day compressive strength of 3,000 psi (20.7 MPa), 3-inch (75-mm) slump, and 1-inch- (25-mm-) maximum size aggregate.

2.5 METAL FINISHES, GENERAL

A. Comply with NAAMM's "Metal Finishes Manual for Architectural and Metal Products" for recommendations for applying and designating metal finishes.

B. Appearance of Finished Work: Variations in appearance of abutting or adjacent pieces are acceptable if they are within one-half of the range of approved Samples. Noticeable variations in the same piece are not acceptable. Variations in appearance of other components are acceptable if they are within the range of approved Samples and are assembled or installed to minimize contrast.

2.6 STEEL, ALUMINUM, AND GALVANIZED STEEL FINISHES

A. Baked-Enamel Powder-Coat Finish: Manufacturer's standard, baked, polyester-TGIC, powder-coat finish complying with finish manufacturer's written instructions for surface preparation, including pretreatment, application, baking, and minimum dry film thickness of 3 to 5 mils (0.075 to 0.127 mm).

B. PVC Finish: Manufacturer's standard, UV-stabilized, mold-resistant, slip-resistant,-matte-textured, dipped or sprayed-on, PVC-plastisol finish, with flame retardant added, complying with coating manufacturer's written instructions for pretreatment, application, and minimum dry film thickness of 80 mils (2 mm).

PART 3 - EXECUTION

3.1 EXAMINATION

A. Examine areas and conditions, with Installer present, for compliance with requirements for site clearing, earthwork, site surface and subgrade drainage, and other conditions affecting performance.

1. Do not begin installation before final grading required for placing protective surfacing is completed, unless otherwise permitted by Landscape Architect.

B. Proceed with installation only after unsatisfactory conditions have been corrected.

3.2 PREPARATION

A. Verify locations of playground perimeter and pathways. Verify that playground layout and equipment locations comply with requirements for each type and component of equipment.

3.3 INSTALLATION, GENERAL

A. General: Comply with manufacturer's written installation instructions, unless more stringent requirements are indicated. Anchor playground equipment securely, positioned at locations and elevations indicated on Shop Drawings.

1. Maximum Equipment Height: Coordinate installed heights of equipment and components with installation of protective surfacing. Set equipment so fall heights and elevation requirements for age group use and accessibility are within required limits. Verify that playground equipment elevations comply with requirements for each type and component of equipment.

B. Post and Footing Excavation: Hand-excavate holes for posts and footings to dimensions, profile, spacings, and in locations indicated on Drawings, in firm, undisturbed or compacted subgrade soil. Level bearing surfaces with drainage fill to required elevation.

C. Post Setting: Set main-frame equipment posts in concrete footing. Protect portion of posts above footing from concrete splatter. Place concrete around posts and vibrate or tamp for consolidation. Verify that posts are set plumb or at the correct angle and are aligned and at the correct height and spacing. Hold posts in position during placement and finishing operations until concrete is sufficiently cured.

D. Resilient Surface Installation: Excavate area to dimensions and depth as indicated in the Drawings. Confirm use zone for each play structure with manufacturer’s coordination drawings. Place separation fabric in excavated area, allowing for overlap as indicated. Place and compact crushed stone base to depth indicated in the Drawings.

E. ADA Swing Alignment: The Contractor shall align newly installed ADA swings into the center of existing bays. Provide all labor and materials to properly fasten the system.

F. Carefully coordinate surfacing depths with the General Contractor. Ensure that a uniform, evenly finished surface is achieved.

3.4 FIELD QUALITY CONTROL

A. Arrange for playground equipment manufacturer's technical personnel to inspect playground and playground equipment and components during installation and at final completion and to certify compliance with the following:

1. ASTM F 1487.
2. CPSC No. 325.

B. Notify Landscape Architect and Owner 48 hours in advance of date and time of final inspection.

3.5 CLEANING

A. After completing playground equipment installation, inspect components. Remove spots, dirt, and debris. Repair damaged finishes to match original finish or replace component.

END OF SECTION

SECTION 23 21 13.33 – GROUND-LOOP HEAT-PUMP PIPING (OUTDOORS)

PART 1 – GENERAL

1.1 SUMMARY

A. This Section includes piping for direct-buried, ground-loop, heat-pump systems that operate between 30 and 104 deg F.

B. Provide a complete Geothermal Heat Exchanger (GLHE) as shown on the drawings, to couple with the Geothermal Water-Source Heat Pump units, to provide an ARI 330 Ground Source Closed Loop Heat Pump system.

C. Test Bore and Soil Conductivity Test results are included at the end of this section for reference.

1.2 PERFORMANCE REQUIREMENTS

A. Components and installation shall be capable of withstanding the following minimum working pressure, unless otherwise indicated:

1. Ground-Loop, Heat-Pump Piping: 100 psig for well depths up to a maximum of 500 ft.

1.3 SUBMITTALS

A. Product Data: For the following:

1. Pipe and fittings.
2. Joining method and equipment.
3. Concrete vault with detailed dimensions.

B. Field quality-control test reports.

C. Record Drawings: Accurate dimensioned drawings of the geothermal loop heat exchanger, prepared by a licensed surveyor, shall be submitted as “AS BUILT” drawings.

D. Submit the following items <u>before</u> construction activities:

1. Manufacture’s specification sheets and installation instruction for each component of the system, showing manufacturer, pipe or tube weight, pressure rating, fitting type and joint type for each piping system.
2. Manufacturer’s data for the grout mixture. Submit details on grouting procedures, methods and equipment.
3. Written flushing, purging, pressure and flow testing plan. Include purge cart cut sheets.

E. Submit the following items <u>after</u> construction activities:

1. Grout testing results for <u>10%</u> of vertical bores.
2. Written results of flushing, purging, pressure and flow testing.

3. Schedule dates for warranty period flushing, purging, etc
4. Survey/Record Drawings with dimensions from fixed benchmarks, depths and sizes.
5. Written tracer wire test results.
6. Submission of the completed items above is a condition of acceptance and closeout for the project.

1.4 QUALITY ASSURANCE

A. Manufacturer's Qualifications: Firms regularly engaged in manufacture of Geothermal Loop Heat Exchanger products and tools of the types, materials, and sizes required; whose products have been in satisfactory use in similar service applications for not less than 5 years.

B. Installer's Qualifications: Installer must have completed a certified training program or be certified by the International Ground Source Heap Pump Association (IGSHPA) and shall have at least five years of successful installation experience on projects with geothermal Loop Heat Exchanger work similar the size and scope that is required for this project.

C. Fabricator's Qualifications: The only acceptable method for joining pipe that is to be buried is by a heat fusion process. Geothermal Loop Heat Exchanger fabricators must have completed a heat fusion school in which each participant has been certified in heat fusion procedures under direct supervision of a Certified Heat Fusion Technician.

D. Acceptable installers with qualified drilling subcontractor:

1. C&J Well Co
2. Ground Loop Solutions
3. Bertram Drilling
4. Ortman Drilling and Water Services
5. Durbin Geothermal
6. Indiana Geothermal
7. Crabtree Drilling

1.5 PERMITS, LAWS AND REQULATIONS

A. Comply with all laws, ordinances, rules, orders and regulations relating to the performance of the work, the protection of property, the maintaining of surface passageways to buildings, fences, and/or other facilities.

B. All applicable Federal and State laws and regulations, municipal ordinances, and the rules and regulations of all authorities having jurisdiction over the project shall apply to the Contractor throughout and they shall be deemed to be included in the Contract as a part, therefore, the same as though herein written out in full.

C. All regulations of the Occupational Safety and health Act are in effect on this Contract. Be aware of all appropriate County, State and Federal regulations that apply to this Contract.

D. Any violations incurred from improper execution of the above shall be paid by the Contractor. Loss of time on the project from such violations will not be tolerated.

1.6 WATER SUPPLY

A. Potable water will be required for the performance of this work. This potable water will be supplied by the Contractor as required. All equipment necessary to handle this water including pumps, water trucks or trailers, storage tanks and all other items necessary to handle and transport this water will be provided by the Contractor. Contractor to obtain water service and meter from the local Water Utility Company.

1.7 WARRANTY

A. Manufacturer's Warranty: Minimum 50-year warranty for polyethylene piping.

B. Installation Warranty: Provide in writing a one (1) year warranty for socket and butt fusion welds in polyethylene piping against leakage. Any leaks during that time period shall be repaired at no charge to the Owner.

PART 2 - PRODUCTS

2.1 PIPES AND FITTINGS

A. Provide piping and pipe fittings in accordance with the following listing:

1. The piping shall be HDPE 4710 (high-density polyethylene) with minimum cell classification of 445576C per ASTM D-3350 'Standard Specification for Polyethylene Plastics Pipe and Fittings Materials'. Resistance to environmental stress cracking is critical to long life expectancy. Therefore, as a more stringent requirement, the piping material shall demonstrate zero failures after 5.000 hours under condition 'C' (100% reagent at 100 C) when tested in accordance with ASTM D-1693, -Standard Test Method of Environmental Stress-Cracking of Ethylene Plastics'. A 50-year limited warranty (in writing) must be issued by the pipe supplier. All horizontal piping shall be SDR-11 type.
2. Vertical Loop

   a. Furnish Pipe and Pipe Fittings as supplied by: Chevron/Performance Pipe, Centennial Plastics and Lamson or approved equal.
   b. Only the following standard sizes of HDPE 4710 are acceptable:

      1) 1.00" IPS SDR-11 for well depths of 400 ft. or less
      2) 1.25" IPS SDR-9 for well depths greater than 400 ft. up to a maximum of 600 ft.

   c. The same manufacturer from identical materials meeting the requirements of this specification shall produce pipe and fittings.
   d. DR Rating

      1) ¾" – 2" Piping – minimum SDR-11.
      2) 3" – 10" Piping – minimum SDR-15.5.

B. Heat Exchanger (Vertical Loop): The Geothermal Loop Heat Exchangers consist of Polyethylene piping, fusion joined into vertical loops and connected with horizontal headers. The Geothermal

Loop Heat Exchanger work is completely outside the building. The headers shall be located as shown on drawings.

C. All vertical Geothermal Loop Heat Exchangers (GLHE's) shall be constructed of high-density polyethylene pipe, SDR-11 or SDR-9. Each GLHE shall be closed by means of a single factory installed U-bend at the bottom of the loop. The U-bend shall be constructed and attached to the GLHE using the heat fusion banding method.

D. Each GLHE shall be pressure tested immediately before insertion into the bore hole and again after manifolding. Testing shall be by air or water pressure, to 100 psi for a minimum of 120 minutes. **Exercise suitable safety precautions during testing to guard against injury to personnel near lines being tested, in case of pipe system component or joint failure under pressure**. Results of all tests shall be recorded and supplied to the engineer upon completion of the project, or as required by the engineer. A complete schedule of GLHE testing shall be submitted to engineer a minimum of five business days prior to first test. The upper ends of each GLHE shall be marked with geothermal piping metallic tracer tape, buried 24” to 18” below grade. (The horizontal piping shall be marked also.)

E. All vertical GLHE bore holes shall be grouted completely with Bentonite based Thermally Enhanced Grout, with a minimum thermal conductivity of 1.07 BTU/hr-ft-F. The Bentonite and Silica compounds shall be field missed with clear potable water to a density of 14.4 lbs. Per gallon, solids content of 70.6%, linear shrinkage potential of less than 3% and permeability of less than 6.9 x 10. Grout shall be applied with a positive displacement piston pump at a rate of 5 to 15 gallons per minute. Grouting to occur no more than 24 hours after the drilling of each borehole.

F. Grout compound manufacturer shall provide analysis of a minimum of six field collected grout samples over the course of the project. The installing contractor, in manufacturer-supplied containers, shall take samples during the grouting of the first bore then at 5 equal intervals, including the last bore.

G. Test results shall be sent to the installing contractor and the engineer. Any grout samples found to be short of specified requirements, will cause subsequent bores to be grouted in excess of the specified thermal conductivity to maintain a field average equal to the specified minimum. Grouting material shall be by GeoPro, Inc. or approved equal.

H. All vertical GLHE bore holes shall be grouted completely in conformance with the International Ground Source Heat Pump Association’s (IGSHPA) standards specified in their publication “Proper Grouting Procedures for Ground-source Heat Pump System”, and all State and Local requirements.

I. Contractor shall monitor each borehole and continue adding grout as required, as settling occurs.

J. Geothermal Piping: All piping shall be constructed of high-density, polyethylene pipe. See above for pipe SDR rating requirements. All joints shall be made using the heat fusion joining method. Piping shall be purchased in such lengths and installed in such manner as to minimize the number of fusion joints required. All piping shall be installed at a minimum depth of four (4) feet below final grade. Piping supply and return lines or bundles shall be separated to minimize thermal interference between the two. The number of points where supply and return lines cross one another shall be minimized. After connections to the vertical GLHE, each lateral shall be pressure tested. Testing shall be by air or water pressure, at up to 100-psi for a minimum of 120 minutes. Exercise suitable safety precautions during testing, to guard against injury to personnel near lines being tested, in case of pipe system component, or joint failure under pressure. Results of all tests shall be recorded and supplied to the Engineer upon completion of the Project, or as required by the Engineer.

K. See Section 20 00 50 and Drawings for excavation and backfill requirements.

L. Open ends of all geothermal pipes shall be sealed to prevent the entry of contaminants until final connections are made.

2.2 THERMALLY ENHANCED GROUT

A. All vertical GLHE bore holes shall be grouted completely in conformance with the International Ground Source Heat Pump Association's (IGSHPA) standards specified in their publication "Proper Grouting Procedures for Ground-source Heat Pump System", and all State and Local requirements.

B. All vertical GLHE bore holes shall be grouted completely with Bentonite based Thermally Enhanced Grout, with a minimum thermal conductivity of 1.07 BTU/hr-ft-F. The Bentonite and Silica compounds shall be field mixed with clear potable water to a density of 14.4 lbs per gallon, solids content of 70.6%, linear shrinkage potential of less than 3% and a permeability rate equal to or less than 1.0 x 10-7 cm/sec (in fresh water) as determined by using the "Falling-head Method" (defined in the United States Army Corp. of Engineers' Civil Engineering Manual No. EM 1110-2-1906, "Laboratory Solis Testing") as recommended by the U.S. Environmental Protection Agency - to insure proper sealing.

1. Engineered graphite alternatives to silica sand must be approved by the Engineer.

C. Acceptable Manufacturers:

1. GeoPro.
2. Baroid.
3. Approved Equal.

D. Grout shall be applied with a positive displacement piston pump at a rate of 5 to 15 gallons per minute. Grouting to occur no more than 24 hours after the drilling of each borehole. Contractor shall monitor each borehole and continue adding grout as required, as settling occurs.

E. Grout compound manufacturer shall provide analysis of a minimum of six field collected grout samples over the course of the project. The installing contractor, in manufacturer-supplied containers, shall take samples during the grouting of the first bore then at 5 equal intervals, including the last bore.

F. Test results shall be sent to the installing contractor and the engineer. Any grout samples found to be short of specified requirements, will cause subsequent bores to be grouted in excess of the specified thermal conductivity to maintain a field average equal to the specified minimum.

2.3 CONCRETE VAULT

A. External Shell: The remote distribution vault shall be a concrete, load bearing vault as supplied by premanufactured or local concrete vendors to detailed dimensions. Provide two man-hole entry points into the vault. One location shall have integral steel ladder to assist in vault access.

B. Fittings:

1. P/T Plugs: Shall be constructed of solid brass and have a dual seal core of Nordel, good up to 350 degrees F for water. Plugs shall be rated zero leakage from vacuum to 1000 psig and are capable of receiving a pressure or temperature probe.
2. Butterfly Valve: Shall be constructed of a cast iron body with an aluminum bronze disk, 416 stainless steel stem with a lever shut off system.
3. Balance Valves: System rated balance valves suited for piping system.
4. 90° Elbows: Shall be molded out of high density polyethylene resins in accordance with the requirements of ASTM 3261.
5. Branch and Service Saddles: Shall be molded out of high density polyethylene resins in accordance with the requirements of ASTM 3261.

PART 3 - EXECUTION

3.1 GENERAL

A. The vertical bore hole shall be clean (no permanent casing) and of sufficient diameter to facilitate the installation of the U-tube assembly. The bore shall be backfilled with the appropriate grout material to assure pipe contact, and shall not contain large, sharp or jagged rocks or debris.

1. **Bore holes to be 5-3/4" diameter by 400 feet deep.**
2. Driller shall provide protection for vehicles, buildings and roads, adjacent to work area, from debris, water, mud, etc., from drilling process.
3. Drilling process may be either "Fluid Rotary" or "Air Rotary", at the Contractors option. If air rotary drilling is used, control all manner of dust caused by this work. Comply with all pollution control regulations of local governing agencies.
4. Drilling rigs shall be leveled to provide a vertical bore hole.
5. Use temporary casings to support unstable soils.

3.2 MOBILIZATION/DEMOBILIZATION

A. Mobilization shall consist of furnishing at the project site, labor, power, supplies, tools, equipment and performing operations in connection with the completion of the bore hole and required tests.

B. Demobilization shall consist of the removal from the construction site of all plant, equipment, supplies and personnel after completion of the work including the Cleanup of all rubbish, litter and waste materials generated by the Contractor's activities. Drill cuttings are not to be utilized as part of the bore hole construction.

3.3 PRE-DRILLING DECONTAMINATION PROCEDURES

A. Prior to arrival on-site, the drilling rig, drill rods, tools and bits shall be clean and free from potential contaminants, such as leaks, excessive grease, oils, gasoline or other substances which could be construed as such.

1. Where leaks occur from drilling rig, the ground shall be protected with drain pans and the leakage disposed of offsite by the Contractor per environmental regulations.

3.4 EARTHWORK

A. Examine areas and conditions under which geothermal loop heat exchanger systems are to be installed. Do not proceed with work until unsatisfactory conditions have been corrected in manner acceptable to installer.

B. The vertical holes of bores shall be clean (no permanent casing) and of sufficient diameter to facilitate the installation of the U-tube assembly. The bores shall be backfilled with appropriate grout material to assure pipe contact, and shall not contain large, sharp or jagged rocks or debris. Reasonable and prudent care shall be taken during installation and grouting in order not to crush, cut or kink the pipe.

C. The horizontal and lateral ditches for the Geothermal Loop Heat Exchanger piping may be dug with trenching machine, and/or backhoe. The piping shall be buried to the minimum of 60” deep. Clean out all debris from trench before placing piping. After the piping is installed, tested, purged, inspected and approved, backfill with sand, rock free backfill material. Coordinate the layer of the header piping with existing utilities, new mechanical and electrical utilities.

3.5 INSTALLATION OF PIPING

A. Install piping in accordance with manufacturer's written instructions.

B. The pipe and pipe fittings must be joined using the socket or butt heat fusion process. No other method is acceptable. The vertical loop take-off tee fittings may be made using the saddle fusion process on header piping larger than 1-1/4'. Exercise extreme caution to completely remove the cutout material. On header piping 1-1/4" and smaller use regular tee fittings. Bell reducer fittings or reducing tees shall be used at all pipe reductions to eliminate trapped air.

C. Avoid sharp bends in piping, Install elbow fittings if necessary. All piping shall be installed at a minimum depth of four (4) feet below final grade. Piping supply and return lines or bundles shall be separated to minimize thermal interference between the two. The number of points where supply and return lines cross one another shall be minimized.

D. Grout material shall be pressure pumped through a one (1) inch to a one and one-half (1 ½) inch inside diameter tremie pipe and placed in the bore column from the bottom to the top. Grouting process shall conform to the manufacturer’s instructions and “Grouting for vertical geothermal heat pump systems – Engineering Design and Field Procedures Manual” as published by the Electric Power Research Institute (EPRI), and (IGSHPA), copyright 2000. Completed grouted surface shall be placed at ground level to ensure complete fill of the bore column.

E. Connect to hydronic water piping using adapter fittings in the mechanical room.

F. Provide continuous 10 AWG solid tracer wire along all lateral ground loop lines. In addition to the continuous tracer wire, provide tracer trench tape above all lateral ground loop lines at 18” below grade and at upper ends of each GLHE. Provide an additional 36” of coiled tracer wire on each end. Strip end sections for further connections, where applicable. Perform tracer wire testing for all tracer wires in conjunction with the Owner/Engineer. This is required for acceptance and closeout procedures.

3.6 TESTING AND CLEANING

A. During installation, trash, soil and small animals shall be kept out of the pipe. Ends of the high-density polyethylene pipe shall be taped and capped until the pipe is joined to the circuit.

B. Each GLHE shall be pressure tested immediately before insertion into the bore hole and again after manifolding. Testing shall be by air or water pressure, to 100 psi for a minimum of 120 minutes. **Exercise suitable safety precautions during testing to guard against injury to personnel near lines being tested, in case of pipe system component or joint failure under pressure**. Results of all tests shall be recorded and supplied to the engineer upon completion of the project, or as required by the engineer. A complete schedule of GLHE testing shall be submitted to engineer a minimum of five business days prior to first test. The upper ends of each GLHE shall be marked with geothermal piping metallic tracer tape, buried 24” to 18” below grade. (The horizontal piping shall be marked also.)

C. After connections to the vertical GLHE, each lateral shall be pressure tested. Testing shall be by air or water pressure, at up to 100-psi for a minimum of 120 minutes. Exercise suitable safety precautions during testing, to guard against injury to personnel near lines being tested, in case of pipe system component, or joint failure under pressure. Results of all tests shall be recorded and supplied to the Engineer upon completion of the Project, or as required by the Engineer.

3.7 FLUSHING AND PURGING THE SYSTEM

A. All systems shall be flushed and purged of air and flow tested to ensure all portions of the heat exchanger are properly flowing. A portable temporary purging unit shall be utilized and shall consist of the following: purge pump - high volume and high head: open reservoir; 50-micron filter assembly with bypass; connecting piping, and connection hoses.

B. Using the purging unit described above flush and purge each Geothermal Loop Heat Exchanger system until free of air, dirt and debris. A velocity of 4 ft./sec. is required in all pipe sections to remove the air. The flushing and purging operation should be conducted with the water source heat pump piping isolated with shut off valves. After the Geothermal Loop Heat Exchanger is completely flushed of air and debris, open the isolation valves and permit circulation through the heat pump portion of the system until the entire system is flushed and purged. The isolation valves at each of the heat pump units are to be closed during this activity, or the hoses to each pump unit joined together to form a loop. Do not flush and purge through the heat pump unit.

C. Do not allow the acid solution used to purge and flush the indoor metal pipe system to the heat pump units, to become mixed with the solution in the GLHE.

D. Utilizing the purging unit conduct a pressure and flow test on the Geothermal Loop Heat Exchanger to ensure the system is free of blockage. If the flow test indicated blockage, locate the blockage systematically clamping off loops with a pinch-off tool, remove the blockage, then re-purge and conduct the pressure and flow test again until all portions of the system are flowing. The flow test must be observed and approved by the Engineer.

E. The Geothermal Loop Heat Exchanger Inspection report is to be filled out by the Contractor and is to be witnessed by the Engineer.

3.8 VAULT PENETRATION

A. Loop contractor shall be responsible for core drilling and sealing around pipes where GLHE supply and return lines penetrate wall of valve vault.

B. All penetrations through building walls shall be sealed with a flexible and watertight material. Mechanical sealing devices are acceptable if they provide a watertight seal and permit expansion and contraction of the HDPE piping.

C. Sealing of the supply and return lines will be “Link Seals,” sized to match the HDPE piping and appropriate size for core drilled hole.

3.9 VAULT INSTALLATION

A. The vault shall be lowered into a pit 98” deep with a 6” bed of #57 gravel. Once the vault is in its place, concrete is poured 36” deep and 12” thick around the vault to balance buoyancy pressure and allow for anchoring.

3.10 CONNECTIONS

A. Drawings indicate general arrangement of piping, fittings, and specialties.

B. Once the well field system has been cleaned and purged, connect to hydronic water piping within the mechanical room using adapter fittings.

3.11 FIELD QUALITY CONTROL

A. Piping Tests: Fill piping 24 hours before testing and apply test pressure to stabilize piping. Use potable water only.

B. Hydrostatic Tests: Test at not less than 1-1/2 times the pipe working-pressure rating allowing for static pressure of borehole depth.

1. Increase pressure in 50-psig increments and inspect each joint between increments. Hold at test pressure for 120 minutes. Slowly increase to next test pressure increment and hold for 30 minutes. After testing at maximum test pressure, reduce pressure to 30 psig. Hold for 120 minutes, and measure pressure at 30-minute intervals. Repair leaks and retest until no leaks exist.

C. Prepare reports of testing activity.

D. Testing shall occur before grouting and after grouting.

3.12 DRILLING MATERIALS

A. Drilling fluid additives are acceptable when required. Otherwise, only potable water shall be used for drilling boreholes.

B. The Contractor shall not deposit drilling waste and water within any existing stream, or in any manner which violates Local, State or Federal laws and regulations. The disposal method of all drilling waste and water must be acceptable to the Engineer and Owner.

C. If required, a temporary casing will be installed to keep the upper consolidated Materials from caving into the boring. The temporary casing should be steel, Grade B, with a minimum wall thickness of 0.280 inches, with an outside diameter of 5 ½ inches or 5 3/8 inches Schedule 40 PVC and be of sufficient length. This temporary casting will be pulled at the time when grouting of the boring takes place.

D. Throughout the entire project, the driller must make all attempts to keep any material that could be construed as contaminants from entering the bore holes. In the event that a bore hole becomes contaminated due to the neglect of the Contractor, he shall at his own expense, perform such work and supply materials as needed to eliminate the contamination.

3.13 SITE CONDITIONS

A. Clean up work on the site shall be a daily activity. The Contractor should not leave any type of trash or refuse of any sort on the site at any time.

B. Final clean up must be completed prior to final inspection and acceptance of the work. No refuse of any variety shall be buried on site.

C. The Contractor shall dispose of all cuttings off of the site. If requested by the Owner and agreed upon prior to the commencement of work.

D. The Contractor shall provide an as-built drawing of the well-field and vault locations as prepared by a licensed surveyor.

3.14 PROTECTION

A. Provide all necessary barricades, shields or temporary wall structures as required to protect adjacent buildings, parking lots, roadways, vehicles and pedestrians from water or debris thrown from drilling or excavating process.

END OF SECTION

SECTION 26 05 19 – LOW-VOLTAGE ELECTRICAL POWER CONDUCTORS AND CABLES

PART 1 - GENERAL

1.1 SUMMARY

A. Section Includes:

1. Building wires and cables rated 600 V and less.
2. Connectors, splices, and terminations rated 600 V and less.

1.2 ACTION SUBMITTALS

A. Product Data: For each type of product.

1.3 INFORMATIONAL SUBMITTALS

A. Field quality-control reports.

PART 2 - PRODUCTS

2.1 CONDUCTORS AND CABLES

A. Copper Conductors: Comply with NEMA WC 70/ICEA S-95-658.

B. Conductor Insulation: Comply with NEMA WC 70/ICEA S-95-658 for Type THHN-2-THWN-2 and Type SO.

C. Multiconductor Cable: Comply with NEMA WC 70/ICEA S-95-658 for metal-clad cable, Type MC and Type SO with ground wire.

2.2 CONNECTORS AND SPLICES

A. Description: Factory-fabricated connectors and splices of size, ampacity rating, material, type, and class for application and service indicated.

2.3 SYSTEM DESCRIPTION

A. Electrical Components, Devices, and Accessories: Listed and labeled as defined in NFPA 70, by a qualified testing agency, and marked for intended location and application.

B. Comply with NFPA 70.

PART 3 - EXECUTION

3.1 CONDUCTOR MATERIAL APPLICATIONS

A. Feeders and Branch Circuits: Copper.

3.2 CONDUCTOR INSULATION AND MULTICONDUCTOR CABLE APPLICATIONS AND WIRING METHODS

A. Service Entrance: Type THHN-2-THWN-2, single conductors in raceway.

B. Feeders and Branch Circuits: Type THHN-2-THWN-2, single conductors in raceway.

C. Lighting Fixture Whips: Type THHN-2-THWN-2, single conductors in raceway, or metal-clad cable, Type MC, no more than 6-foot in length.

D. Cord Drops and Portable Appliance Connections: Type SO, hard service cord with stainless-steel, wire-mesh, strain relief device at terminations to suit application.

3.3 INSTALLATION OF CONDUCTORS AND CABLES

A. Conduit Fill: Unless otherwise indicated, install no more than the following in a single conduit or EMT:

1. Single-Phase Circuits: Three circuits, phases A, B, and C, and associated grounded (neutral) conductors, and equipment grounding conductor.
2. Three-Phase Circuits: One circuit, phases A, B, and C, and grounded conductor where applicable, and equipment grounding conductor.

B. Conceal cables in finished walls, ceilings, and floors unless otherwise indicated.

C. Complete raceway installation between conductor and cable termination points according to Section 26 05 33 "Raceways and Boxes for Electrical Systems" prior to pulling conductors and cables.

D. Use manufacturer-approved pulling compound or lubricant where necessary; compound used must not deteriorate conductor or insulation. Do not exceed manufacturer's recommended maximum pulling tensions and sidewall pressure values.

E. Use pulling means, including fish tape, cable, rope, and basket-weave wire/cable grips, that will not damage cables or raceway.

F. Install exposed cables parallel and perpendicular to surfaces of exposed structural members, and follow surface contours where possible.

G. Support cables according to Section 26 05 29 "Hangers and Supports for Electrical Systems."

3.4 CONNECTIONS

A. Tighten electrical connectors and terminals according to manufacturer's published torque-tightening values. If manufacturer's torque values are not indicated, use those specified in UL 486A.

B. Make splices, terminations, and taps that are compatible with conductor material.

C. Wiring at Outlets: Install conductor at each outlet, with at least 6 inches of slack.

3.5 IDENTIFICATION

A. Identify and color-code conductors and cables according to Section 26 05 53 "Identification for Electrical Systems."

B. Identify each spare conductor at each end with identity number and location of other end of conductor, and identify as spare conductor.

3.6 SLEEVE AND SLEEVE-SEAL INSTALLATION FOR ELECTRICAL PENETRATIONS

A. Install sleeves and sleeve seals at penetrations of exterior floor and wall assemblies. Comply with requirements in Section 26 05 44 "Sleeves and Sleeve Seals for Electrical Raceways and Cabling."

3.7 FIRESTOPPING

A. Apply firestopping to electrical penetrations of fire-rated floor and wall assemblies to restore original fire-resistance rating of assembly according to Division 07 Section "Penetration Firestopping."

3.8 FIELD QUALITY CONTROL

A. Perform the following tests and inspections:

1. After installing conductors and cables and before electrical circuitry has been energized, test service entrance and feeder conductors for compliance with requirements.
2. Perform each visual and mechanical inspection and electrical test stated in NETA Acceptance Testing Specification. Certify compliance with test parameters.

B. Test and Inspection Reports: Prepare a written report to record the following:

1. Procedures used.
2. Results that comply with requirements.
3. Results that do not comply with requirements and corrective action taken to achieve compliance with requirements.

C. Conductors and cables will be considered defective if they do not pass tests and inspections.

END OF SECTION

SECTION 32 33 00 – SITE FURNISHINGS

PART 1 - GENERAL

1.1 RELATED DOCUMENTS

A. Drawings and general provisions of the Contract, including General and Supplementary Conditions and Division 1 Specification Sections, apply to this Section.

B. Bidders shall include in their Base Bid price all materials, labor, and shop drawings required to provide and install each furnishing, including all applicable fasteners, anchors, foundations, footings, supports, and base preparation required to deliver a turn-key system that complies with these specifications.

1.2 SUMMARY

A. This Section includes the following:

1. Flagpole
2. Benches
3. Bike Racks
4. Litter Receptacle
5. Shade Structures
6. Bollard Sleeve
7. Sway Bench
8. Collapsible Bollard

B. Prior to Final Acceptance, the Contractor shall submit to the Owner three (3) copies of Maintenance Manuals, which shall include all necessary instructions for the proper care of equipment and furnishings.

C. Related Sections include the following:

1. Division 31 Section "Earthwork" for soil materials, excavating, backfilling and site grading requirements.
2. Division 31 Section “Concrete Paving” for concrete, formwork and related items.

1.3 SUBMITTALS

A. Product Data: For each type of site furnishing specified, with installation instruction for each unit built-in or connected to other construction. Include methods of installation for each type of substrate.

B. Samples for Initial Selection Purposes: Manufacturer’s standard size samples showing full range of colors, textures, and patterns available for each type of furnishing required.

C. Submissions for Verification Purposes: Manufacturer’s standard sizes for each type of site furnishing required.

D. Shop Drawings: For each furnishing system, indicating dimensions, anchoring methods, colors, finishes, and related delegated design requirements. Note that some systems require a signed and sealed engineer's certification. Shop drawings will allow for final approval from the Owner and his representatives. Color selections, if not clearly identified within this Specification, will also be determined during the submittal process as selected from the Manufacturer's full range.

1.4 QUALITY ASSURANCE

A. Manufacturer Qualifications: Not less than three (3) years of production experience for each type of product specified, and whose published literature clearly indicates compliance with the indicated requirements of this Section.

B. Single Source Responsibility: Once a determination is made by the Owner as to the best value provider of any particular furnishing type, it is anticipated that all subsequent installations of that same furnishing type will be produced by a single manufacturer.

C. The Manufacturer shall offer comprehensive product support and engineering as part of their Base Bid, including coordination with on-site conditions that may affect use of any particular product.

D. All furnishings shall offer no less than a five (5) year warranty against fading or other defects. Ensure UV-stabilized finishes are provided in all outdoor applications.

E. When applicable, the latest 2012 edition of the International Building Code shall apply to any manufacturer's delegated design responsibilities. Bidders shall size all supports and anchors to account for local wind/ice/snow load.

1.5 DELIVERY, STORAGE AND HANDLING

A. Deliver materials to Project site in original factory wrappings and/or containers, clearly labeled with identification of manufacturer, brand name and lot number (as applicable).
   1. Sequence delivery of site furnishings as near as practicable to required time scheduled for installation so as to minimize the required amount of onsite storage time.
   2. Store materials in original, undamaged packages and containers, protected from the elements, soiling and other potential sources of damage.

B. Comply with instructions and recommendations of manufacturer for additional delivery, storage and handling requirements.

1.6 MAINTENANCE

A. Maintenance Instructions: Submit manufacturer's printed instructions for maintenance of furnishings and their respective installation, including methods and frequency recommended for maintaining optimum condition under anticipated use conditions. Include precautions about materials and methods which may be detrimental to finishes and performance.

PART 2 - PRODUCTS

2.1 MISCELLANEOUS MATERIALS

A. Welding Electrodes and Filler Metal: Type and alloy of filler metal and electrodes as recommended by producer of metal to be welded, complying with applicable AWS specifications and as required for color match, strength and compatibility in fabricated items.

B. Cast-in-Place Anchors: Anchors fabricated from corrosion-resistant materials with capability to sustain imposed design loads when installed in concrete as determined by testing per ASTM E 488 conducted by a qualified independent testing agency.

C. Fasteners: Use fasteners of same basic metal as the fastened metal, unless otherwise indicated. Do not use metals that are corrosive or incompatible with materials joined.

1. Provide concealed fasteners for interconnection of site furnishings and for their attachment to other Work except where exposed fasteners are unavoidable or are manufacturer's standard fastening method. Provide tamper-proof machine screws for exposed fasteners, unless otherwise indicated or approved by the Owner and his representatives.

2.2 FABRICATION, GENERAL

A. Provide site furnishing items, both freestanding and permanently installed, equipped with functions as specified. Fabricate units with tight seams and joints, exposed edges rolled. Provide products with consistent finish with no evidence of wrinkling, chipping, uneven coloration, dents, uneven/inconsistent welds or other imperfections.

2.3 FLAGPOLE

A. Basis-of-design: Tapered Aluminum Internal Halyard with lockable cover plate and gold ball topper. Satin finish. Model: MDG40CC, 40' height. Satin Finish. 6' x 10' Flag Size. Include all proper hardware and clips for a complete installation. As coordinated, designed, and fabricated by Admiral Flag Inc, 1-800-783-7653. Install per manufacturers recommendations.

B. Numerous manufacturers offer comparable products and are encouraged to offer an equal product as part of the bidding process. Provide full product literature and ensure all quality standards demonstrated by the basis-of-design product are met or exceeded.

2.4 BENCHES

A. Basis-of-design: Ogden Curved Bench, Model #OGM1900-SCR5 as manufactured by Maglin Site Furniture, Phone 800.716.5506. Surface mounted, Square Leg, 30%. Black powdercoat finish on frame. Confirm final locations with the Landscape Architect Prior to mounting.

B. Numerous manufacturers offer comparable products and are encouraged to offer an equal product as part of the bidding process. Provide full product literature and ensure all quality standards demonstrated by the basis-of-design product are met or exceeded.

2.5 BIKE RACK

A. Basis-of-design: Single Side Extended Grid Bike Rack, 20 Bike Capacity, Model No. #CBBR-20SG-BK as Manufactured by Belson Outdoors, Phone: 1-800-323-5664. Surface mounted. Black powdercoat finish. Confirm final locations with the Landscape Architect prior to mounting.

B. Numerous manufacturers offer comparable products and are encouraged to offer an equal product as part of the bidding process. Provide full product literature and ensure all quality standards demonstrated by the basis-of-design product are met or exceeded.

2.6 LITTER RECEPTACLE

A. See Drawings for proposed locations; confirm in field with Landscape Architect prior to ordering and subsequent installation.
1. Manufacturer: Landscape Forms
2. Collection: Rockford Litter + Recycling
3. Style: Side Opening
4. Side Panel: Aluminum
5. Powdercoat Color: Landscape Architect to choose from standard range of colors.
6. Signage: Include signage for each unit.
7. Installation: Surface Mount

2.7 SHADE STRUCTURE

A. Basis-of-design: SkyWays Triangle Sail (20'x20'x20') Shade as manufactured by Landscape Structures, Delano, MN 55328, PlayPros Phone 502.395.3234, or approved equal prior to bidding. Confirm final locations with the Landscape Architect prior to mounting.

B. Approved Equal: 20' x 20' x 20' Modern Shade 3-Point Shade, as manufactured by Modern Shade. Contact Recreation Insites, Fishers, IN. Phone:317-617-1740.

C. Approved Equal: 20' x 20' x 20' 3-Point Hypar Sail, as manufactured by USA Shade. Contact Snider Recreation, North Royalton, OH. Phone: 812-373-6427.

D. Numerous manufacturers offer comparable products and are encouraged to offer an equal product as part of the bidding process. Provide full product literature and ensure all quality standards demonstrated by the basis-of-design product are met or exceeded.

2.8 BOLLARD SLEEVE

A. A. See Drawings for proposed locations; confirm in field with Landscape Architect prior to installation.
1. Manufacturer: Post Guard
2. Model: Slope Decorative Bollard Cover 1/8" thick HDPE
3. Color: Owner and Landscape Architect to select color.
4. Size: 6" diameter. Verify this will fit over steel pipe bollard
5. Height: Needs to fit over 42" bollard.
6. Verify locations in field with Landscape Architect prior to installation

B. Numerous manufacturers offer comparable products and are encouraged to offer an equal product as part of the bidding process. Provide full product literature and ensure all quality standards demonstrated by the basis-of-design product are met or exceeded.

2.9 SWAY BENCH

A. See Drawings for proposed locations; confirm in field with Landscape Architect prior to installation.
1. **Manufacturer: GameTime**
2. **Model: 28028, Sway Bench**
3. **Color and Finish: Landscape Architect to select color.**
4. **Verify locations in field with Landscape Architect prior to installation**

B. Approved Equal: Studio Collection 6' Swinging Bench, In-Ground, as manufactured Burke. Contact Snider Recreation, North Royalton, OH. Phone: 812-373-6427. Landscape Architect to select color.

2.10 COLLAPSIBLE BOLLARD

C. See Drawings for proposed locations; confirm in field with Landscape Architect prior to installation.
1. **Manufacturer: MaxiForce**
2. **Model: MCSW-SS1-EZ with Breakaway System**
3. **Color and Finish: Standard Color to be chosen by Landscape Architect.**
4. **Verify locations in field with Landscape Architect prior to installation**

PART 3 - EXECUTION

3.1 PREPARATION

A. Coordinate and furnish anchorages and setting drawings, diagrams, templates, instructions and directions for installing items having integral anchors that are to be embedded in concrete or masonry construction. Coordinate delivery of such items to the Project site.

3.2 INSTALLATION, GENERAL

A. Provide anchorage devices and fasteners where necessary for securing site furnishings to in-place construction.

B. As required, and in accordance with manufacturer's written recommendations, perform drilling and fitting to install units. Set units accurately in location, alignment and elevation, plumb, level and true, measured from established lines and levels. Provide temporary bracing or anchors in form work for items that are to be built into concrete, masonry or similar construction.

C. Fit exposed connections accurately together to form tight, hairline joints. If cutting, welding and/or grinding is required for proper shop fitting and joining of site furnishings, restore finishes to completely eliminate any evidence of such corrective Work.

1. Do not cut or abrade finishes that cannot be completely restored in the field. Return items with such finishes to the shop for required alterations, followed by complete refinishing, or provide new units as required.

3.3 INSTALLATION

A. Verify that materials are those specified before installing. Inspect furnishings to insure that all units are complete, including fasteners, anchoring devices and/or accessories required for installation as shown and indicated.

B. Coordinate installation of furnishings with related Work to ensure that units will be undamaged at time of acceptance of Work. Provide temporary protective covering for units to avoid damage during the remainder of the construction period. Remove any temporary coverings at time of Substantial Completion.

C. Coordinate installation of furnishings with related Work to ensure no damage is done to adjacent work in progress, work in place, or other ongoing operations.

D. Remove and replace all damaged or defective items at no additional cost to the Owner. Clean and polish exposed surfaces using materials and methods as recommended by the manufacturer.

END OF SECTION

SECTION 32 92 00 – TURF AND GRASSES

PART 1 - GENERAL

1.1 RELATED DOCUMENTS

A. Drawings and general provisions of the Contract, including General and Supplementary Conditions and Division 1 Specification Sections, apply to this Section.

1.2 SUMMARY

A. This Section includes the following:

1. Seeding.

B. Related Sections include the following:
1. Division 31 Section "Earth Moving" for excavation, filling and backfilling, and rough grading.

1.3 DEFINITIONS

A. Finish Grade: Elevation of finished surface of planting soil.

B. Manufactured Soil: Soil produced off-site by homogeneously blending mineral soils or sand with stabilized organic soil amendments to produce topsoil or planting soil.

C. Planting Soil: Native or imported topsoil, manufactured topsoil, or surface soil modified to become topsoil; mixed with soil amendments.

D. Subgrade: Surface or elevation of subsoil remaining after completing excavation, or top surface of a fill or backfill immediately beneath planting soil.

1.4 SUBMITTALS

A. Product Data: For each type of product indicated.

B. Certification of Grass Seed: From seed vendor for each grass-seed monostand or mixture stating the botanical and common name and percentage by weight of each species and variety, and percentage of purity, germination, and weed seed. Include the year of production and date of packaging.

1. Certification of each seed mixture for turf grass, native grasses and plugs, identifying source, including name and telephone number of supplier.

C. Product Certificates: For soil amendments and fertilizers, signed by product manufacturer.

D. Qualification Data: For landscape installer.

E. Material Test Reports: For existing surface soil and imported topsoil.

F. Planting Schedule: Indicating anticipated planting dates for each type of planting.

G. Maintenance Instructions: Recommended procedures to be established by Owner for maintenance of lawns and meadows during a calendar year. Submit before expiration of required maintenance periods.

1.5 QUALITY ASSURANCE

A. Installer Qualifications: A qualified landscape installer whose work has resulted in successful lawn and meadow establishment.

1. Installer's Field Supervision: Require Installer to maintain an experienced full-time supervisor on Project site when planting is in progress.

B. Soil-Testing Laboratory Qualifications: An independent laboratory, recognized by the State Department of Agriculture, with the experience and capability to conduct the testing indicated and that specializes in types of tests to be performed.

C. Topsoil Analysis: Furnish soil analysis by a qualified soil-testing laboratory stating percentages of organic matter; gradation of sand, silt, and clay content; deleterious material; pH; and mineral and plant-nutrient content of topsoil.

1. Report suitability of topsoil for lawn growth. State recommended quantities of nitrogen, phosphorus, and potash nutrients and soil amendments to be added to produce a satisfactory topsoil.

D. Pre-installation Conference: Conduct conference at Project site to comply with requirements in Division 1 Section "Project Management and Coordination."

1.6 DELIVERY, STORAGE, AND HANDLING

A. Seed: Deliver seed in original sealed, labeled, and undamaged containers.

1.7 SCHEDULING

A. Planting Restrictions: Plant during one of the following periods. Coordinate planting periods with maintenance periods to provide required maintenance from date of Substantial Completion.

1. Spring Planting: April 1 to May 30
2. Fall Planting: August 15 to September 30

B. Weather Limitations: Proceed with planting only when existing and forecasted weather conditions permit.

1.8 LAWN MAINTENANCE

A. Begin maintenance immediately after each area is planted and continue until acceptable lawn is established, but for not less than the following periods:

1. Seeded Lawns: One (1) year from date of Substantial Completion.

B. Maintain and establish lawn by watering, fertilizing, weeding, mowing, trimming, replanting, and other operations. Roll, regrade, and replant bare or eroded areas and remulch to produce a uniformly smooth lawn.

1. In areas where mulch has been disturbed by wind or maintenance operations, add new mulch. Anchor as required to prevent displacement.

C. Watering: Provide and maintain temporary piping, hoses, and lawn-watering equipment to convey water from sources and to keep lawn uniformly moist to a depth of 4 inches (100 mm).

1. Schedule watering to prevent wilting, ponding, erosion, and displacement of seed or mulch. Lay out temporary watering system to avoid walking over muddy or newly planted areas.
2. Water lawn at a minimum rate of 1 inch (25 mm) per week.

D. Mow lawn as soon as top growth is tall enough to cut. Repeat mowing to maintain specified height without cutting more than 40 percent of grass height. Remove no more than 40 percent of grass-leaf growth in initial or subsequent mowings. Do not delay mowing until grass blades bend over and become matted. Do not mow when grass is wet. Schedule initial and subsequent mowings to maintain the following grass height:

1. Mow grass 1-1/2 to 2 inches (38 to 50 mm) high.

E. Lawn Post-fertilization: Apply fertilizer after initial mowing and when grass is dry.

1. Use fertilizer that will provide actual nitrogen of at least 1 lb/1000 sq. ft. (0.45 kg/92.9 sq. m) to lawn area.

PART 2 - PRODUCTS

2.1 SEEDED LAWNS

A. <u>Bluegrass Blend Seed Mix:</u> Provide seed mixture composed of freshly produced grass seed, proportioned as follows. Sow seed at the rate of 4 lb/1000 sq. ft., or as required to achieve the performance requirements of successful germination and coverage

a. 65 percent Kentucky bluegrass (Poa pratensis).
b. 20 percent chewings red fescue (Festuca rubra variety).
c. 15 percent perennial ryegrass (Lolium perenne).

*** Follow all manufacturer's recommendations for application procedures and seed bed preparation. No noxious weed seed.**

B. Topsoil: ASTM D 5268, pH range of 5.5 to 7, a minimum of 5 percent organic material content; free of stones 1 inch (25 mm) or larger in any dimension and other extraneous materials harmful to plant growth.

1. Topsoil Source: Verify suitability of stripped topsoil to produce suitable topsoil to comply with this Specification. Clean surface soil of roots, plants, sod, stones, clay lumps, and other extraneous materials harmful to plant growth.

    a. Supplement with imported or manufactured topsoil from off-site sources when quantities are insufficient. Obtain topsoil displaced from naturally well-drained construction or mining sites where topsoil occurs at least 4 inches (100 mm) deep; do not obtain from agricultural land, bogs or marshes.

2.2 INORGANIC SOIL AMENDMENTS

A. Lime: ASTM C 602, agricultural limestone containing a minimum 80 percent calcium carbonate equivalent and as follows:

1. Class: Class T, with a minimum 99 percent passing through No. 8 (2.36-mm) sieve and a minimum 75 percent passing through No. 60 (0.25-mm) sieve.
2. Class: Class O, with a minimum 95 percent passing through No. 8 (2.36-mm) sieve and a minimum 55 percent passing through No. 60 (0.25-mm) sieve.
3. Provide lime in form of dolomitic limestone.

B. Sulfur: Granular, biodegradable, containing a minimum of 90 percent sulfur, with a minimum 99 percent passing through No. 6 (3.35-mm) sieve and a maximum 10 percent passing through No. 40 (0.425-mm) sieve.

C. Iron Sulfate: Granulated ferrous sulfate containing a minimum of 20 percent iron and 10 percent sulfur.

D. Aluminum Sulfate: Commercial grade, unadulterated.

E. Perlite: Horticultural perlite, soil amendment grade.

F. Agricultural Gypsum: Finely ground, containing a minimum of 90 percent calcium sulfate.

G. Sand: Clean, washed, natural or manufactured, free of toxic materials.

2.3 ORGANIC SOIL AMENDMENTS

A. Compost: Well-composted, stable, and weed-free organic matter, pH range of 5.5 to 8; moisture content 35 to 55 percent by weight; 100 percent passing through 1-inch (25-mm) sieve; not exceeding 0.5 percent inert contaminants and free of substances toxic to plantings; and as follows:

1. Organic Matter Content: 50 to 60 percent of dry weight.

B. Peat: Finely divided or granular texture, with a pH range of 6 to 7.5, containing partially decomposed moss peat, native peat, or reed-sedge peat and having a water-absorbing capacity of 1100 to 2000 percent.

C. Wood Derivatives: Decomposed, nitrogen-treated sawdust, ground bark, or wood waste; of uniform texture, free of chips, stones, sticks, soil, or toxic materials.

D. Manure: Well-rotted, unleached, stable or cattle manure containing not more than 25 percent by volume of straw, sawdust, or other bedding materials; free of toxic substances, stones, sticks, soil, weed seed, and material harmful to plant growth.

2.4 PLANTING ACCESSORIES

A. Selective Herbicides: EPA registered and approved, of type recommended by manufacturer for application.

2.5 FERTILIZER

A. Bonemeal: Commercial, raw or steamed, finely ground; a minimum of 4 percent nitrogen and 20 percent phosphoric acid.

B. Superphosphate: Commercial, phosphate mixture, soluble; a minimum of 20 percent available phosphoric acid.

C. Commercial Fertilizer: Commercial-grade complete fertilizer of neutral character, consisting of fast- and slow-release nitrogen, 50 percent derived from natural organic sources of urea formaldehyde, phosphorous, and potassium in the following composition:
   1. Composition: Nitrogen, phosphorous, and potassium in amounts recommended in soil reports from a qualified soil-testing agency.

D. Slow-Release Fertilizer: Granular or pelleted fertilizer consisting of 50 percent water-insoluble nitrogen, phosphorus, and potassium in the following composition:
   1. Composition: Nitrogen, phosphorous, and potassium in amounts recommended in soil reports from a qualified soil-testing agency.

2.6 MULCHES

A. Straw Mulch: Provide air-dry, clean, mildew- and seed-free, salt hay or threshed straw of wheat, rye, oats, or barley.

B. Compost Mulch: Well-composted, stable, and weed-free organic matter, pH range of 5.5 to 8; moisture content 35 to 55 percent by weight; 100 percent passing through 1-inch (25-mm) sieve; not exceeding 0.5 percent inert contaminants and free of substances toxic to plantings; and as follows:

   1. Organic Matter Content: 50 to 60 percent of dry weight.

C. Fiber Mulch: Biodegradable, dyed-wood, cellulose-fiber mulch; nontoxic; free of plant-growth or germination inhibitors; with maximum moisture content of 15 percent and a pH range of 4.5 to 6.5.

D. Nonasphaltic Tackifier: Colloidal tackifier recommended by fiber-mulch manufacturer for slurry application; nontoxic and free of plant-growth or germination inhibitors.

E. Asphalt Emulsion: ASTM D 977, Grade SS-1; nontoxic and free of plant-growth or germination inhibitors.

2.7 EROSION-CONTROL MATERIALS (see Erosion Control Specification)

PART 3 - EXECUTION

3.1 EXAMINATION

A. Examine areas to receive lawns and grass for compliance with requirements and other conditions affecting performance. Proceed with installation only after unsatisfactory conditions have been corrected.

3.2 PREPARATION

A. Protect structures, utilities, sidewalks, pavements, and other facilities, trees, shrubs, and plantings from damage caused by planting operations.

1. Protect adjacent and adjoining areas from hydroseeding overspray.

B. Provide erosion-control measures to prevent erosion or displacement of soils and discharge of soil-bearing water runoff or airborne dust to adjacent properties and walkways.

3.3 LAWN PREPARATION

A. Limit lawn subgrade preparation to areas to be planted.

B. Newly Graded Subgrades: Loosen subgrade to a minimum depth of 4 inches (100 mm). Remove stones larger than 1 inch (25 mm) in any dimension and sticks, roots, rubbish, and other extraneous matter and legally dispose of them off Owner's property.

1. Apply fertilizer directly to subgrade before loosening.
2. Thoroughly blend planting soil mix off-site before spreading or spread topsoil, apply soil amendments and fertilizer on surface, and thoroughly blend planting soil mix.

a. Delay mixing fertilizer with planting soil if planting will not proceed within two days.
b. Mix lime with dry soil before mixing fertilizer.

3. Spread planting soil mix to a minimum depth of 6 inches, but not less than required to meet finish grades after light rolling and natural settlement. Do not spread if planting soil or subgrade is frozen, muddy, or excessively wet.

a. Spread approximately one-half the thickness of planting soil mix over loosened subgrade. Mix thoroughly into top 2 inches (50 mm) of subgrade. Spread remainder of planting soil mix.
b. Reduce elevation of planting soil to allow for soil thickness of sod.

C. Unchanged Subgrades: If lawns are to be planted in areas unaltered or undisturbed by excavating, grading, or surface soil stripping operations, prepare surface soil as follows:

1. Remove existing vegetation. Do not mix into surface soil.

2. Loosen surface soil to a depth of at least of 6 inches (150 mm). Apply soil amendments and fertilizers according to planting soil mix proportions and mix thoroughly into top 4 inches (100 mm) of soil. Till soil to a homogeneous mixture of fine texture.

   a. Apply fertilizer directly to surface soil before loosening.

3. Remove stones larger than 1 inch (25 mm) in any dimension and sticks, roots, trash, and other extraneous matter.
4. Legally dispose of waste material, vegetation, and turf, off Owner's property.

D. Finish Grading: Grade planting areas to a smooth, uniform surface plane with loose, uniformly fine texture. Grade to within plus or minus 1/2 inch (13 mm) of finish elevation. Roll and rake, remove ridges, and fill depressions to meet finish grades. Limit fine grading to areas that can be planted in the immediate future.

E. Moisten prepared lawn areas before planting if soil is dry. Water thoroughly and allow surface to dry before planting. Do not create muddy soil.

F. Restore areas if eroded or otherwise disturbed after finish grading and before planting.

3.4 SEEDING

A. Sow seed with spreader or seeding machine. Do not broadcast or drop seed when wind velocity exceeds 5 mph (8 km/h). Evenly distribute seed by sowing equal quantities in two directions at right angles to each other.

   1. Do not use wet seed or seed that is moldy or otherwise damaged.

B. Sow seed as required to achieve the performance requirements of successful germination and coverage.

C. Rake seed lightly into top 1/8 inch (3 mm) of topsoil, roll lightly, and water with fine spray.

D. Protect seeded areas with slopes exceeding 1:6 with erosion-control fiber mesh and 1:4 with erosion-control blankets installed and stapled according to manufacturer's written instructions.

E. Protect seeded areas with slopes not exceeding 1:6 by spreading straw mulch. Spread uniformly at a minimum rate of 2 tons/acre (42 kg/92.9 sq. m) to form a continuous blanket 1-1/2 inches (38 mm) in loose depth over seeded areas. Spread by hand, blower, or other suitable equipment.

   1. Bond straw mulch by spraying with asphalt emulsion at the rate of 10 to 13 gal./1000 sq. ft. (38 to 49 L/92.9 sq. m). Take precautions to prevent damage or staining of structures or other plantings adjacent to mulched areas. Immediately clean damaged or stained areas.

F. Protect seeded areas from hot, dry weather or drying winds by applying compost mulch within 24 hours after completing seeding operations. Soak and scatter uniformly to a depth of 3/16 inch (4.8 mm) and roll to a smooth surface.

3.5 HYDROSEEDING (When applicable)

A. Hydroseeding: Mix specified seed, fertilizer, and fiber mulch in water, using equipment specifically designed for hydroseed application. Continue mixing until uniformly blended into homogeneous slurry suitable for hydraulic application.

1. Mix slurry with non-asphaltic or asphalt-emulsion tackifier.
2. Apply slurry uniformly to all areas to be seeded in a one-step process. Apply mulch at a minimum rate of 1,500-lb/acre (15.3-kg/92.9 sq. m) dry weight but not less than the rate required to obtain specified seed-sowing rate.

3.6 SATISFACTORY LAWNS

A. Satisfactory Seeded Lawn: At end of maintenance period, a healthy, uniform, close stand of grass has been established, free of weeds and surface irregularities, with coverage exceeding 90 percent over any 10 sq. ft. (0.92 sq. m) and bare spots not exceeding 3 by 3 inches (62 by 62 mm).

B. Reestablish lawns that do not comply with requirements and continue maintenance until lawns are satisfactory.

3.7 RESTORATION AND RECOVERY OF UNSATISFACTORY LAWNS

A. The Contractor shall submit a full Maintenance Program, in writing, to the Owner detailing restoration procedures and schedules if the initial seeding fails to achieve successful lawn establishment. The following tenets (adapted from Purdue University's *Maintenance Calendar for Indiana Lawns*) shall form the foundation of the Program.

MONTH	PRACTICES	NOTES
March	Watch for snow mold damage as snow recedes.	Snow mold is possible under snow or matted leaves, rake infected area to help dry out.
April	Mow at 2.5" – 3.5".	Begin mowing as soon as lawn greens up and begins growing.
	Apply a pre-emergence herbicide if crabgrass has been a problem in the past.	Use a product containing little or no nitrogen. Any N in the product should be a slow-release form such as sulfur- or polymer-coated urea, urea formaldehyde, or a natural organic. Avoid applying more than 0.75 lbs N/1000 s.f.
May	Continue mowing at 2.5" – 3.5".	Frequent mowing is needed during this time to avoid removing more than 1/3 of the leaf blade during a single mowing.
	Aerification and/or power raking if needed.	Aerification will help alleviate compaction and thatch while power raking will help alleviate only thatch.
	Apply 0.75-1.0 lbs. N/1000 s.f.	Use a product containing mostly slow-release N, but do not fertilize now if fertilizer was applied with a pre-emergence herbicide in April.
	Spot spray dandelions with a broadleaf herbicide.	Wait until flowering to apply herbicide in spring. Safer and more efficient dandelion control is achieved with broadleaf herbicide applications in October.
	Watch for red thread in slow-growing lawns.	Red thread can be minimized with fertilizer application.
June	Continue mowing at 2.5" – 3.5".	
	Irrigate as needed.	Irrigate thoroughly, then do not water again until the first signs of drought stress are seen.
	Watch for red thread, dollar spot in slow-growing lawns.	If disease outbreak is severe, consider applying 0.5-0.75 lbs N/1000 s.f.

	Apply post-emergence herbicide if undesirable amount of crabgrass develops.	Follow label directions carefully, and do not apply when temperatures are over 80°F or to drought-stressed turf.
July	Continue mowing at 2.5" – 3.5".	
	Irrigate as needed.	
	Apply 0.75 lbs N/1000 s.f.	Fertilize only on irrigated lawns or during summers with above average rainfall and use a product containing slow-release N.
	Start scouting for white grubs.	If lawn has a history of white grub damage, consider applying insecticide containing Merit in early July.
August	Continue mowing at 2.5" – 3.5".	
	Irrigate as needed.	
	Reseed thin or bare areas starting in the middle of August.	Optimum seeding window is August 15 – September 15 in central IN. In such a condition that the initial seeding procedures fail to achieve a successful lawn condition, slit seeding may be utilized as an in-fill technique to improve germination.
	Watch for rust in slow-growing lawns.	Irrigate to encourage growth, and if disease outbreak is severe consider applying 0.5-0.75 lbs N/1000 s.f.
	Continue scouting for white grubs.	If grubs are found or lawn has a history of white grub damage, consider applying insecticide containing Merit in early August.
September	Continue mowing at 2.5" – 3.5".	
	Irrigate as needed.	
	Watch for rust in slow-growing lawns.	Irrigate to encourage growth, and if disease outbreak is severe consider applying 0.5-0.75 lbs N/1000 s.f.
	Watch for white grub damage.	If grub damage is found, increase irrigation and consider application of the insecticide Dylox.
October	Continue mowing at 2.5" – 3.5".	Continue as long as grass is growing and to mulch tree leaves into turf.
	Irrigate as needed.	
	Control dandelions and other broadleaf weeds now.	Spot sprays or blanket applications of broadleaf herbicides containing 2,4-D, dicamba nad MCPP are most effective.
November	Continue mowing at 2.5" – 3.5".	DO NOT reduce the mowing height for the last few mowings. Continue mulching tree leaves into the turf.
	Apply 1.5 lbs N/1000 s.f.	Use a fast-release N product such as urea and apply after the final mowing but while the grass is still green.

B. Redundant Coordination: Should the Contractor fail to achieve successful turf establishment as a result of inattention, poor timing or general lack of effort as determined by the Landscape Architect, the Consultant's time and travel expenses will be reimbursed by the Contractor for multiple site/punch visits and additional coordination or administration required to overcome shortcomings.

3.8 CLEANUP AND PROTECTION

A. Promptly remove soil and debris created by lawn work from paved areas. Clean wheels of vehicles before leaving site to avoid tracking soil onto roads, walks, or other paved areas.

B. Erect barricades and warning signs as required to protect newly planted areas from traffic. Maintain barricades throughout maintenance period and remove after lawn is established.

C. Remove erosion-control measures after grass establishment period.

END OF SECTION

BCSC MAPLE GROVE ELEMENTARY SCHOOL

TIPTON LAKES BLVD
COLUMBUS, INDIANA 47201

100% CONSTRUCTION DOCUMENTS
CIVIL PLANS
MAY 30, 2025

ADDENDUM #1: JUNE 10, 2025
2 **ADDENDUM #2: JUNE 17,2025**

PROJECT VICINITY

LOCATION MAP

NORTH

VICINITY MAP
BASE IMAGE FROM GOOGLE EARTH
ACCESSED SEPTEMBER. 2024
SCALE: 1"=200'
SCALE IN FEET
0 200' 400'

Drawing Index

Sheet Number	Sheet Title	Drawing Number
1	TITLE SHEET	C000
2	BOUNDARY RETRACEMENT SURVEY	BNDRY1
3	BOUNDARY RETRACEMENT SURVEY	BNDRY2
4	TOPOGRAPHIC SURVEY	TOPO1
5	TOPOGRAPHIC SURVEY	TOPO2
6	TOPOGRAPHIC SURVEY	TOPO3
7	TOPOGRAPHIC SURVEY	TOPO4
8	SITE DEMOLITION	C101
9	OVERALL GRADING PLAN	C300
10	GRADING PLAN	C301
11	GRADING PLAN	C302
12	GRADING PLAN	C303
13	OVERALL FLOOD ROUTING PLAN	C304
14	OVERALL STORMWATER PLAN	C400
15	STORMWATER STRUCTURES	C401
16	STORMWATER PLAN-EAST	C402
17	STORMWATER PLAN-WEST	C403
18	STROMWATER PROFILES	C404
19	STORMWATER PROFILES	C405
20	OVERALL UTILITY PLAN	C500
21	UTILITY PLAN	C501
22	UTILITY PLAN	C502
23	SITE DETAILS	C800
24	WATER DETAILS	C801
25	SANITARY DETAILS	C802
26	STORMWATER DETAILS	C803
27	STORMWATER DETAILS	C804
28	STORMWATER POLLUTION & PREVENTION PLAN	C900
29	STORMWATER POLLUTION & PREVENTION PLAN	C901
30	STORMWATER POLLUTION & PREVENTION PLAN	C902
31	STORMWATER POLLUTION & PREVENTION NOTES	C903
32	STORMWATER POLLUTION & PREVENTION DETAILS	C904

PROJECT TEAM:

LANDSCAPE ARCHITECT
CONTEXT DESIGN
5825 LAWTON LOOP E DR
INDIANAPOLIS, IN 46216
PH: (317) 485-6900
CONTACT: LIZ MOONEY
EMAIL: LMOONEY@context-design.com

SURVEYOR
CIVIL & ENVIRONMENTAL CONSULTANTS, INC.
530 E. OHIO ST., STE. G
INDIANAPOLIS, IN 46204
PH: (317) 655-7777
CONTACT: ANTHONY SYERS
EMAIL: asyers@cecinc.com

CIVIL ENGINEER
CIVIL & ENVIRONMENTAL CONSULTANTS, INC.
530 E. OHIO ST., STE. G
INDIANAPOLIS, IN 46204
PH: (317) 655-7777
CONTACT: JONATHAN PASYK
EMAIL: jpasyk@cecinc.com

ARCHITECT
CSO ARCHITECTS
8831 KEYSTONE CROSSING
INDIANAPOLIS, IN 46240
PH: (317) 848-7800
CONTACT: JIM FUNK
EMAIL: JFunk@CSOinc.net

UTILITIES:

GAS
CENTERPOINT ENERGY
4324 MIDDLE RD
COLUMBUS, IN 47203

ELECTRIC
DUKE ENERGY
2727 CENTRAL AVE
COLUMBUS, IN 47201

SANITARY SEWER
COLUMBUS CITY UTILITIES
1111 MCCLURE RD
COLUMBUS, IN 47201
(812)372-8861
ATTN: SCOTT DOMPKE

STORM SEWER
COLUMBUS ENGINEERING
123 WASHINGTON ST.
COLUMBUS, IN 47201
(812)376-2540
ATTN: ANDREW BECKORT

WATER
COLUMBUS CITY UTILITIES
1111 MCCLURE RD
COLUMBUS, IN 47201
(812)372-8861
ATTN: SCOTT DOMPKE

FIRE DEPARTMENT
COLUMBUS FIRE DEPARTMENT
1101 JACKSON ST.
COLUMBUS, IN 47201
(812)376-2583
ATTN: TROY TODD

PLANNING DEPARTMENT
COLUMBUS PLANNING DEPARTMENT
123 WASHINGTON ST.
COLUMBUS, IN 47201
(812)376-2550
ATTN: JEFF BERGMAN

BENCHMARKS:

UNLESS OTHERWISE NOTED, ELEVATIONS SHOWN HEREON ARE BASED UPON AN OPUS SOLUTION AND ARE ON THE 1988 NORTH AMERICAN VERTICAL DATUM (NAVD88 (GEOID 18)). IT IS MY OPINION THAT THE UNCERTAINTY IN THE ELEVATION OF THE PROJECT BENCHMARK DOES NOT EXCEED 0.10 FOOT.

TBM#1: SET MAG NAIL IN CONCRETE AT THE SOUTH END OF A MEDIAN LOCATED AT THE INTERSECTION OF TIPTON LAKES BLVD. AND WESTBROOK CT.
ELEV. = 673.65

TBM#2: SET MAG NAIL WEST SIDE OF MEDIAN 400'± SOUTH OF INTERSECTION OF TIPTON LAKES BLVD AND WESTBROOK COURT.
ELEV. = 666.55

TBM#3: SET MAG NAIL IN CONCRETE AT THE NORTH END OF A MEDIAN LOCATED AT THE INTERSECTION OF TIPTON LAKES BLVD AND SCARBOROUGH DR.
ELEV. = 655.56

UTILITY NOTE:

THE UNDERGROUND UTILITIES SHOWN HAVE BEEN LOCATED FROM FIELD SURVEY INFORMATION AND EXISTING DRAWINGS. THE SURVEYOR MAKES NO GUARANTEES THAT THE UNDERGROUND UTILITIES COMPRISE ALL SUCH UTILITIES IN THE AREA, EITHER IN-SERVICE OR ABANDONED. THE SURVEYOR FURTHER DOES NOT WARRANT THAT THE UNDERGROUND UTILITIES SHOWN ARE IN THE EXACT LOCATION INDICATED ALTHOUGH THE SURVEYOR DOES CERTIFY THAT THEY ARE LOCATED AS ACCURATELY AS POSSIBLE FROM INFORMATION AVAILABLE. THE SURVEYOR HAS NOT PHYSICALLY LOCATED THE UNDERGROUND UTILITIES. INDIANA 811 ONE-CALL PUBLIC UTILITY LOCATE SERVICE TICKET NUMBERS 2405235264 AND 2405235311 WERE ISSUED FOR THIS SITE.

PRIOR TO ANY EXCAVATION FOR UNDERGROUND UTILITIES, THE CONTRACTOR SHALL EXPOSE AND VERIFY LOCATIONS (HORIZONTAL AND VERTICAL) OF ALL EXISTING UTILITIES INCLUDING BUT NOT LIMITED TO GAS, WATER, AND SANITARY SEWER. ANY CONFLICTS SHALL BE REPORTED IMMEDIATELY TO THE ENGINEER AND THE APPROPRIATE AUTHORITIES.

FLOOD NOTE:

THE PARCEL DESCRIBED AND SHOWN HEREIN LIES WITHIN ZONE "X" (UN-SHADED) AS SAID PARCEL PLOTS ON MAP NUMBERS 18005C0110E AND 18005C0128E (DATED DECEMBER 9, 2014) OF THE FLOOD INSURANCE RATE MAPS FOR BARTHOLOMEW COUNTY, INDIANA. THE ACCURACY OF THIS FLOOD HAZARD STATEMENT IS SUBJECT TO MAP SCALE UNCERTAINTY AND TO ANY OTHER UNCERTAINTY IN LOCATION OR ELEVATION ON THE REFERENCED FLOOD INSURANCE RATE MAP.

Indiana 811
Know what's below. Call before you dig.

BCSC TOGETHER WE LEARN

CSO
8831 Keystone Crossing, Indianapolis, IN 46240
317.848.7800 | csoinc.net
© 2018 CSO Architects, Inc. All Rights Reserved

Höweler+Yoon Architecture
617.517.4101 howeleryoon.com

Civil & Environmental Consultants, Inc.
530 E. Ohio Street · Suite G
Indianapolis, IN 46204
317-655-7777 · 877-746-0749
www.cecinc.com

PROJECT:
BARTHOLOMEW CONSOLIDATED SCHOOL CORPORATION
MAPLE GROVE ELEMENTARY SCHOOL

SCOPE DRAWINGS:
These drawings indicate the general scope of the project in terms of architectural design concept, the dimensions of the building, the general construction materials and the type of structural, mechanical and electrical systems.
The drawings do not necessarily indicate or describe all work required for the performance and completion of the contract documents.
On the basis of the general scope indicated or described, the trade contractors shall furnish all items required for the proper execution and completion of the work.

REVISIONS:
1 06/10/2025 - ADDENDUM #01
2 06/17/2025 - ADDENDUM #02

ISSUE DATE	DRAWN BY	CHECKED BY
05/30/25	BEB	JMP

DRAWING TITLE:
TITLE SHEET

CERTIFIED BY:
JONATHAN M. PASYK
REGISTERED
No. PE12100829
STATE OF INDIANA
PROFESSIONAL ENGINEER
05/30/2025

DRAWING NUMBER
C000

PROJECT NUMBER
2024022

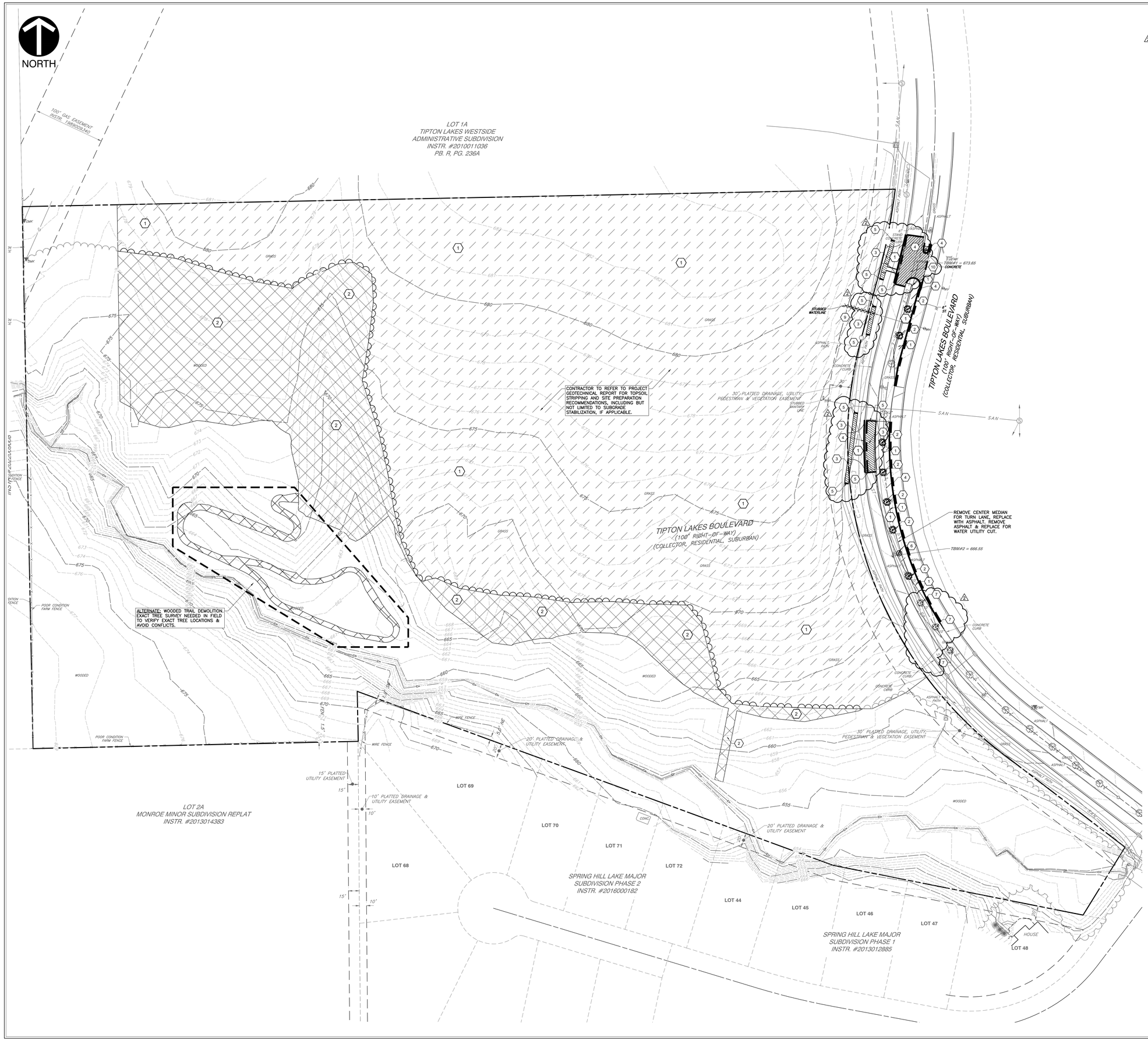

DEMOLITION NOTES:

1. THE CONTRACTOR SHALL BE RESPONSIBLE FOR REMOVAL AND DISPOSAL OFF-SITE OF ALL ITEMS SHOWN ON THE DEMOLITION PLAN INCLUDING ITEMS ENCOUNTERED DURING EXCAVATION OF BUILDING FOUNDATIONS AND UTILITY PLACEMENT.
2. PRIOR TO STARTING DEMOLITION, IT IS THE RESPONSIBILITY OF THE CONTRACTOR TO OBTAIN ALL PERMITS REQUIRED BY LOCAL GOVERNMENTAL AGENCIES. THE CITY OF COLUMBUS WILL REQUIRE AN IMPROVEMENT IN THE RIGHT-OF-WAY (ROW) PERMIT FOR ALL DRIVEWAYS, CURBS, AND SIDEWALKS IN THE RIGHT-OF-WAY, PERMIT TO EXCAVATE IS REQUIRED FOR ALL EXCAVATIONS AND BORINGS IN THE RIGHT-OF-WAY, AND SPECIAL USE OF ROW PERMIT IS REQUIRED FOR ANY LANE RESTRICTIONS ON PUBLIC STREETS. A STORMWATER MANAGEMENT PERMIT IS ALSO REQUIRED. 2
3. THE CONTRACTOR SHALL COORDINATE WITH THE LOCAL UTILITY COMPANIES FOR THE DISCONNECTION AND REMOVAL OF SERVICES TO EXISTING STRUCTURES.
4. ITEMS SHOWN ON THE DEMOLITION PLAN TO BE SALVAGED SHALL BE TRANSPORTED TO LOCATION SPECIFIED BY THE OWNER OR HIS/HER REPRESENTATIVE.
5. ITEMS OF SALVAGEABLE VALUE TO THE CONTRACTOR MAY BE REMOVED WITH THE OWNER OR HIS/HER REPRESENTATIVE'S PERMISSION. THE CONTRACTOR SHALL NOT STORE THESE ITEMS ON SITE.
6. THE CONTRACTOR MAY NOT USE EXPLOSIVES OR BURN DEBRIS.
7. CONDUCT DEMOLITION OPERATIONS TO ENSURE MINIMAL INTERFERENCE WITH ROADS, SIDEWALKS AND ANY OTHER ADJACENT OCCUPIED FACILITIES.
8. DO NOT CLOSE OR OBSTRUCT ROADS, SIDEWALKS OR ANY OTHER OCCUPIED FACILITIES WITHOUT PERMISSION FROM THE LOCAL AUTHORITY HAVING JURISDICTION AND/ OR PROPERTY OWNERS.
9. THE CONTRACTOR SHALL ENSURE SAFE PASSAGE OF PERSON TRAVERSING THROUGH OR AROUND THE CONSTRUCTION SITE.
10. THE CONTRACTOR SHALL PROTECT FROM DAMAGE, SURROUNDING STRUCTURES, UTILITIES AND OTHER FACILITIES DURING DEMOLITION AND REMOVAL OPERATIONS.
11. THE CONTRACTOR SHALL REFER TO THE PROJECT GEOTECHNICAL REPORT FOR SITE STRIPPING AND PREPARATION RECOMMENDATIONS, INCLUDING BUT NOT LIMITED TO SOIL STABILIZATION.
12. BUILDING STRUCTURES INCLUDING FOUNDATIONS OR BASEMENTS SHALL BE REMOVED AND BACKFILLED WITH APPROVED BACKFILL MATERIAL. BACKFILL MATERIAL SHALL BE PLACED IN MAXIMUM EIGHT INCH LIFTS AND COMPACTED IN ACCORDANCE WITH THE GEOTECHNICAL REPORT OR A MINIMUM OF 95% OF A STANDARD PROCTOR.
13. UTILITIES SHALL BE REMOVED AND BACKFILLED WITH APPROVED BACKFILL MATERIAL. BACKFILL MATERIAL SHALL BE PLACED IN MAXIMUM EIGHT INCH LIFTS AND COMPACTED IN ACCORDANCE WITH THE GEOTECHNICAL REPORT OR A MINIMUM OF 95% OF A STANDARD PROCTOR.
14. THE CONTRACTOR SHALL BE RESPONSIBLE FOR ENSURING THE CONSTRUCTION SITE AND SURROUNDING AREAS ARE FREE OF ACCUMULATED DEBRIS.

DEMOLITION LEGEND:

- EXISTING WOODLAND TO BE REMOVED
- EXISTING GRASS/LANDSCAPING/LAWN/TRASH TO BE REMOVED
- ASPHALT TO BE REMOVED FULL DEPTH
- ASPHALT MILL & RESURFACE
- CONCRETE CURB TO BE REMOVED
- SAWCUT EXISTING PAVEMENT
- EXISTING UTILITY TO BE REMOVED
- PROJECT SITE BOUNDARY
- MISC. ITEM TO BE REMOVED
- PROTECT EXISTING ITEM

DEMOLITION ITEMS:

1. EXISTING SITE GRASS/LANDSCAPING/LAWN/VEGETATION TO BE REMOVED COMPLETE; COORDINATE WITH LANDSCAPING PLANS.
2. REMOVE EXISTING TREE/SHRUB/WOODLAND COMPLETE; DISPOSE OF OFF SITE.
3. REMOVE EXISTING ASPHALT COMPLETE; DISPOSE OF OFF SITE.
4. REMOVE EXISTING CONCRETE CURB COMPLETE; DISPOSE OF OFF SITE.
5. FULL DEPTH SAWCUT. CUT CONCRETE AT JOINT LINES WHEN POSSIBLE.
6. REMOVE EXISTING ELECTRICAL LINE, LIGHT POLE, AND CONCRETE BASE COMPLETE. COORDINATE WITH SITE LIGHTING PLANS.
7. TREE PROTECTION.
8. NOT USED. 2
9. REMOVE PORTION OF EXISTING WATER MAIN STUB. REFER TO C500 SERIES OF PLAN SHEETS
10. ASPHALT MILL & RESURFACE 2

FLOOD NOTE:

THE PARCEL DESCRIBED AND SHOWN HEREIN LIES WITHIN ZONE "X" (UN-SHADED) AS SAID PARCEL PLOTS ON MAP NUMBERS 18005C0110E AND 18005C0128E (DATED DECEMBER 9, 2014) OF THE FLOOD INSURANCE RATE MAPS FOR BARTHOLOMEW COUNTY, INDIANA. THE ACCURACY OF THIS FLOOD HAZARD STATEMENT IS SUBJECT TO MAP SCALE UNCERTAINTY AND TO ANY OTHER UNCERTAINTY IN LOCATION OR ELEVATION ON THE REFERENCED FLOOD INSURANCE RATE MAP.

UTILITY NOTE:

THE UNDERGROUND UTILITIES SHOWN HAVE BEEN LOCATED FROM FIELD SURVEY INFORMATION AND EXISTING DRAWINGS. THE SURVEYOR MAKES NO GUARANTEES THAT THE UNDERGROUND UTILITIES COMPRISE ALL SUCH UTILITIES IN THE AREA, EITHER IN-SERVICE OR ABANDONED. THE SURVEYOR FURTHER DOES NOT WARRANT THAT THE UNDERGROUND UTILITIES SHOWN ARE IN THE EXACT LOCATION INDICATED ALTHOUGH THE SURVEYOR DOES CERTIFY THAT THEY ARE LOCATED AS ACCURATELY AS POSSIBLE FROM INFORMATION AVAILABLE. THE SURVEYOR HAS NOT PHYSICALLY LOCATED THE UNDERGROUND UTILITIES. INDIANA 811 ONE-CALL PUBLIC UTILITY LOCATE SERVICE TICKET NUMBERS 2405235264 AND 2405235311 WERE ISSUED FOR THIS SITE.

PRIOR TO ANY EXCAVATION FOR UNDERGROUND UTILITIES, THE CONTRACTOR SHALL EXPOSE AND VERIFY LOCATIONS (HORIZONTAL AND VERTICAL) OF ALL EXISTING UTILITIES INCLUDING BUT NOT LIMITED TO GAS, WATER, AND SANITARY SEWER. ANY CONFLICTS SHALL BE REPORTED IMMEDIATELY TO THE ENGINEER AND THE APPROPRIATE AUTHORITIES.

SCALE IN FEET
0 50' 100'

Indiana 811
Know what's below. Call before you dig.

BCSC TOGETHER WE LEARN

CSO
8831 Keystone Crossing, Indianapolis, IN 46240
317.848.7800 | csoinc.net
© 2018 CSO Architects, Inc. All Rights Reserved

Höweler+Yoon Architecture
617.517.4101 howeleryoon.com

Civil & Environmental Consultants, Inc.
530 E. Ohio Street · Suite G
Indianapolis, IN 46204
317-655-7777 · 877-746-0749
www.ceciinc.com

PROJECT:
BARTHOLOMEW CONSOLIDATED SCHOOL CORPORATION
MAPLE GROVE ELEMENTARY SCHOOL

SCOPE DRAWINGS:
These drawings indicate the general scope of the project in terms of architectural design concept, the dimensions of the building, the major architectural elements and the type of construction contemplated for the project.
The drawings do not necessarily indicate or describe all work required for full performance and completion of the requirements of the Contract.
On the basis of the general scope indicated or described, the contractor shall furnish all labor and materials required for the proper execution and completion of the work.

REVISIONS:
2 06/17/2025 - ADDENDUM #02

ISSUE DATE	DRAWN BY	CHECKED BY
05/30/25	BEB	JMP

DRAWING TITLE:
DEMOLITION PLAN

CERTIFIED BY:
JONATHAN M. PASLAY REGISTERED No. PE12100829 STATE OF INDIANA PROFESSIONAL ENGINEER
05/30/2025

DRAWING NUMBER
C101

PROJECT NUMBER
2024022

SECTION A-A

SCALE H:1"=20'; V:1"=10'

SECTION B-B

SCALE H:1"=20'; V:1"=10'

GENERAL GRADING NOTES:

1. CONTRACTOR SHALL STRICTLY ADHERE TO THE EROSION CONTROL MEASURES PREPARED FOR THIS PROJECT.
2. EARTHWORK SHALL INCLUDE CLEARING AND GRUBBING, STRIPPING AND STOCKPILING TOPSOIL, MASS GRADING, EXCAVATION, FILLING, UNDER CUT AND REPLACEMENT, IF REQUIRED, AND COMPACTION.
3. CONTRACTOR TO REFILL UNDERCUT AREAS WITH SUITABLE MATERIAL AND COMPACT AS RECOMMENDED BY THE GEOTECHNICAL ENGINEER.
4. PLACE TOPSOIL OVER THE SUBGRADE OF UNPAVED, DISTURBED AREAS TOA DEPTH INDICATED ON THE LANDSCAPE PLANS (6" MINIMUM). PAVEMENT SLOPES ACROSS ACCESSIBLE PARKING STALLS AND ADJOINING ACCESS AISLES SHALL BE MAXIMUM 2%.
5. ALL SLOPES SHALL BE 3:1 (HORIZONTAL:VERTICAL) MAXIMUM UNLESS NOTED OTHERWISE.
6. ALL AREAS NOT PAVED SHALL BE STABILIZED IN ACCORDANCE WITH THE EROSION CONTROL PLAN, UNLESS NOTED OTHERWISE.
7. ALL EXCESS SOIL MATERIALS SHALL BECOME THE PROPERTY OF THE CONTRACTOR UNLESS OTHERWISE DESIGNATED SHALL BE REMOVED BY THE CONTRACTOR AND DISPOSED OF OFFSITE AT NO ADDITIONAL COST TO THE OWNER IN ACCORDANCE WITH ALL LOCAL AND STATE CODES AND PERMIT REQUIREMENTS.
8. DRAINAGE SYSTEMS SHALL BE INSPECTED DURING CONSTRUCTION BY A REGISTERED PROFESSIONAL ENGINEER OR LAND SURVEYOR. WITHIN 30 DAYS AFTER COMPLETION OF ON AND OFF-SITE DRAINAGE FACILITIES, THE REGISTERED PROFESSIONAL SHALL CERTIFY IN WRITING THE COMPLIANCE OF THE DRAINAGE FACILITIES PER LOCAL REQUIREMENTS.
9. CONTRACTOR SHALL PERPETUATE ALL DRAINS AND TILES ENCOUNTERED DURING CONSTRUCTION. COORDINATE WITH ENGINEER OF RECORD REGARDING THE CONNECTION TO THE PROPOSED STORM SEWER SYSTEM.
10. STORM STRUCTURES RECEIVING SUB-SURFACE DRAINS (SSD) SHALL HAVE BOTH CONNECTIONS CORE DRILLED. T OR Y BLIND CONNECTIONS ARE NOT ALLOWED.
11. REFER TO AND FOLLOW THE RECOMMENDATIONS OF THE GEOTECHNICAL REPORT.

= =

FLOOD NOTE:

THE PARCEL DESCRIBED AND SHOWN HEREIN LIES WITHIN ZONE "X" (UN-SHADED) AS SAID PARCEL PLOTS ON MAP NUMBERS 18005C0110E AND 18005C0128E (DATED DECEMBER 9, 2014) OF THE FLOOD INSURANCE RATE MAPS FOR BARTHOLOMEW COUNTY, INDIANA. THE ACCURACY OF THIS FLOOD HAZARD STATEMENT IS SUBJECT TO MAP SCALE UNCERTAINTY AND TO ANY OTHER UNCERTAINTY IN LOCATION OR ELEVATION ON THE REFERENCED FLOOD INSURANCE RATE MAP.

BENCHMARKS:

UNLESS OTHERWISE NOTED, ELEVATIONS SHOWN HEREON ARE BASED UPON AN OPUS SOLUTION AND ARE ON THE 1988 NORTH AMERICAN VERTICAL DATUM (NAVD88 (GEOID 18)). IT IS MY OPINION THAT THE UNCERTAINTY IN THE ELEVATION OF THE PROJECT BENCHMARK DOES NOT EXCEED 0.10 FOOT.

TBM#1: SET MAG NAIL IN CONCRETE AT THE SOUTH END OF A MEDIAN LOCATED AT THE INTERSECTION OF TIPTON LAKES BLVD. AND WESTBROOK CT.
ELEV. = 673.65

TBM#2: SET MAG NAIL WEST SIDE OF MEDIAN 400'± SOUTH OF INTERSECTION OF TIPTON LAKES BLVD AND WESTBROOK COURT.
ELEV. = 666.55

TBM#3: SET MAG NAIL IN CONCRETE AT THE NORTH END OF A MEDIAN LOCATED AT THE INTERSECTION OF TIPTON LAKES BLVD AND SCARBOROUGH DR.
ELEV. = 655.56

GRADING LEGEND:

945	PROPOSED INDEX CONTOUR
944	PROPOSED INTERMEDIATE CONTOUR
	PROPOSED DRAINAGE SWALE
	PROPOSED GRADE BREAK
	PROPOSED STORM SEWER LINE
5.00%	PROPOSED SLOPE LABEL
945.00	PROPOSED SPOT ELEVATION
945.50 / 945.00	TOP OF CURB ELEVATION / BOTTOM OF CURB ELEVATION

ABBREVIATIONS:
ME = MATCH EXISTING
HP = HIGH POINT
LP = LOW POINT
GB = GRADE BREAK
TW = TOP OF WALL
BW = BOTTOM OF WALL

UTILITY NOTE:

THE UNDERGROUND UTILITIES SHOWN HAVE BEEN LOCATED FROM FIELD SURVEY INFORMATION AND EXISTING DRAWINGS. THE SURVEYOR MAKES NO GUARANTEES THAT THE UNDERGROUND UTILITIES COMPRISE ALL SUCH UTILITIES IN THE AREA, EITHER IN-SERVICE OR ABANDONED. THE SURVEYOR FURTHER DOES NOT WARRANT THAT THE UNDERGROUND UTILITIES SHOWN ARE IN THE EXACT LOCATION INDICATED ALTHOUGH THE SURVEYOR DOES CERTIFY THAT THEY ARE LOCATED AS ACCURATELY AS POSSIBLE FROM INFORMATION AVAILABLE. THE SURVEYOR HAS NOT PHYSICALLY LOCATED THE UNDERGROUND UTILITIES. INDIANA 811 ONE-CALL PUBLIC UTILITY LOCATE SERVICE TICKET NUMBERS 2405235264 AND 2405235311 WERE ISSUED FOR THIS SITE.

PRIOR TO ANY EXCAVATION FOR UNDERGROUND UTILITIES, THE CONTRACTOR SHALL EXPOSE AND VERIFY LOCATIONS (HORIZONTAL AND VERTICAL) OF ALL EXISTING UTILITIES INCLUDING BUT NOT LIMITED TO GAS, WATER, AND SANITARY SEWER. ANY CONFLICTS SHALL BE REPORTED IMMEDIATELY TO THE ENGINEER AND THE APPROPRIATE AUTHORITIES.

Indiana 811
Know what's below. Call before you dig.

BCSC
TOGETHER WE LEARN

CSO
8831 Keystone Crossing, Indianapolis, IN 46240
317.848.7800 | csoinc.net

© 2018 CSO Architects, Inc. All Rights Reserved

Höweler+Yoon Architecture
617.517.4101 howeleryoon.com

Civil & Environmental Consultants, Inc.
530 E. Ohio Street · Suite G
Indianapolis, IN 46204
317-655-7777 · 877-746-0749
www.ceiinc.com

PROJECT:
BARTHOLOMEW CONSOLIDATED SCHOOL CORPORATION
MAPLE GROVE ELEMENTARY SCHOOL

SCOPE DRAWINGS:
These drawings indicate the general scope of the project in terms of architectural design concept, the dimensions of the building, the general construction materials and the type of structurals, mechanical and electrical systems.
The drawings do not necessarily indicate or describe all work required for full performance and completion of the requirements of the Contract.
In all cases, the general scope indicated or described, the trade contractors shall furnish all items required for the proper execution and completion of the work.

REVISIONS:
2 06/17/2025 - ADDENDUM #02

ISSUE DATE	DRAWN BY	CHECKED BY
05/30/25	BEB	JMP

DRAWING TITLE:
OVERALL GRADING PLAN

CERTIFIED BY:
JONATHAN M. PASYK
REGISTERED
No. PE12100829
STATE OF INDIANA
PROFESSIONAL ENGINEER
05/30/2025

DRAWING NUMBER
C300 2

PROJECT NUMBER
2024022

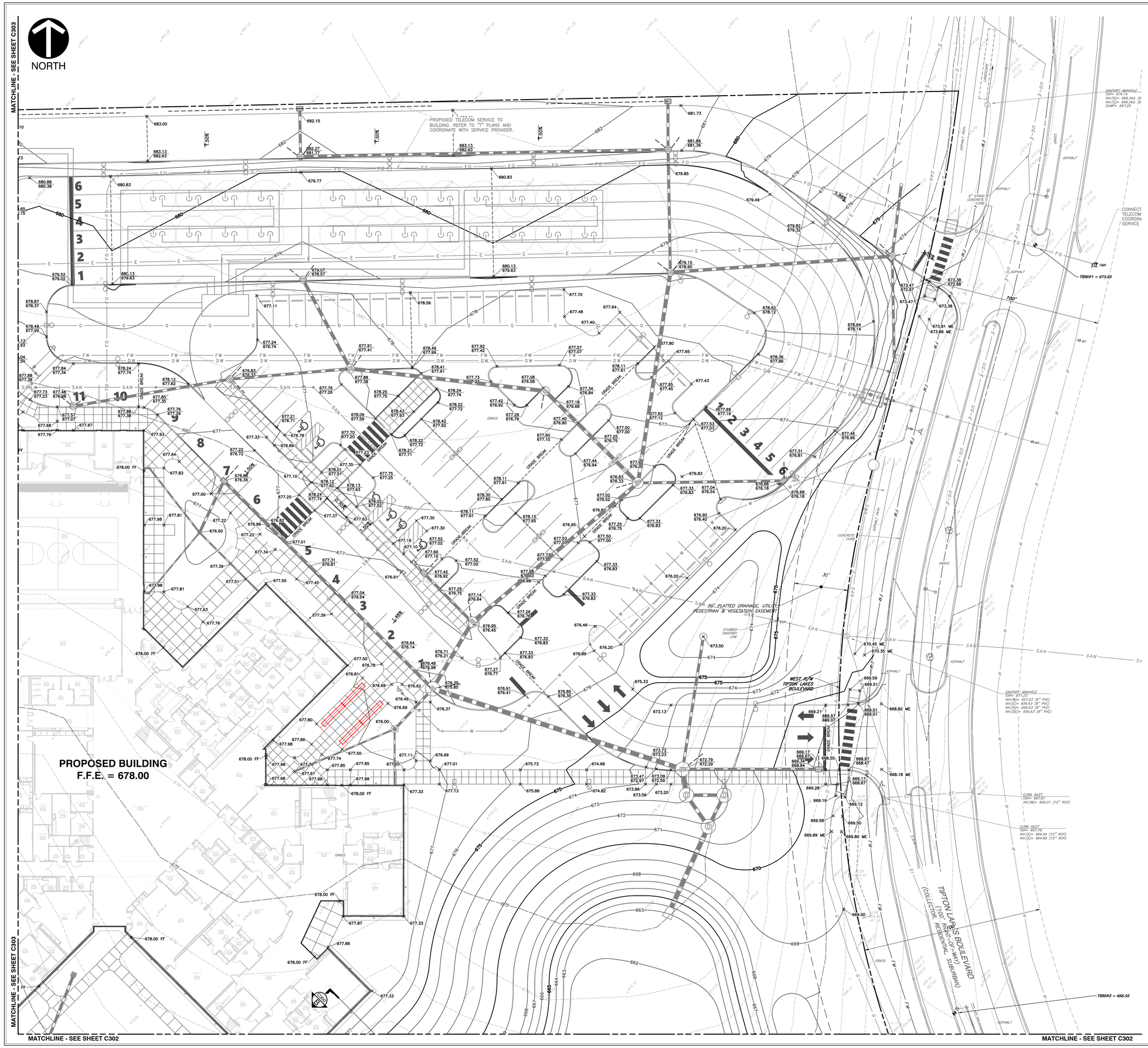

GENERAL GRADING NOTES:

1. CONTRACTOR SHALL STRICTLY ADHERE TO THE EROSION CONTROL MEASURES PREPARED FOR THIS PROJECT.
2. EARTHWORK SHALL INCLUDE CLEARING AND GRUBBING, STRIPPING AND STOCKPILING TOPSOIL, MASS GRADING, EXCAVATION, FILLING, UNDER CUT AND REPLACEMENT, IF REQUIRED, AND COMPACTION.
3. CONTRACTOR TO REFILL UNDERCUT AREAS WITH SUITABLE MATERIAL AND COMPACT AS RECOMMENDED BY THE GEOTECHNICAL ENGINEER.
4. PLACE TOPSOIL OVER THE SUBGRADE OF UNPAVED, DISTURBED AREAS TOA DEPTH INDICATED ON THE LANDSCAPE PLANS (6" MINIMUM). PAVEMENT SLOPES ACROSS ACCESSIBLE PARKING STALLS AND ADJOINING ACCESS AISLES SHALL BE MAXIMUM 2%.
5. ALL SLOPES SHALL BE 3:1 (HORIZONTAL:VERTICAL) MAXIMUM UNLESS NOTED OTHERWISE.
6. ALL AREAS NOT PAVED SHALL BE STABILIZED IN ACCORDANCE WITH THE EROSION CONTROL PLAN, UNLESS NOTED OTHERWISE.
7. ALL EXCESS SOIL MATERIALS SHALL BECOME THE PROPERTY OF THE CONTRACTOR UNLESS OTHERWISE DESIGNATED SHALL BE REMOVED BY THE CONTRACTOR AND DISPOSED OF OFFSITE AT NO ADDITIONAL COST TO THE OWNER IN ACCORDANCE WITH ALL LOCAL AND STATE CODES AND PERMIT REQUIREMENTS.
8. DRAINAGE SYSTEMS SHALL BE INSPECTED DURING CONSTRUCTION BY A REGISTERED PROFESSIONAL ENGINEER OR LAND SURVEYOR. WITHIN 30 DAYS AFTER COMPLETION OF ON AND OFF-SITE DRAINAGE FACILITIES, THE REGISTERED PROFESSIONAL SHALL CERTIFY IN WRITING THE COMPLIANCE OF THE DRAINAGE FACILITIES PER LOCAL REQUIREMENTS.
9. CONTRACTOR SHALL PERPETUATE ALL DRAINS AND TILES ENCOUNTERED DURING CONSTRUCTION. COORDINATE WITH ENGINEER OF RECORD REGARDING THE CONNECTION TO THE PROPOSED STORM SEWER SYSTEM.
10. STORM STRUCTURES RECEIVING SUB-SURFACE DRAINS (SSD) SHALL HAVE BOTH CONNECTIONS CORE DRILLED. T OR Y BLIND CONNECTIONS ARE NOT ALLOWED.
11. REFER TO AND FOLLOW THE RECOMMENDATIONS OF THE GEOTECHNICAL REPORT.

FLOOD NOTE:

THE PARCEL DESCRIBED AND SHOWN HEREIN LIES WITHIN ZONE "X" (UN-SHADED) AS SAID PARCEL PLOTS ON MAP NUMBERS 18005C0110E AND 18005C0128E (DATED DECEMBER 9, 2014) OF THE FLOOD INSURANCE RATE MAPS FOR BARTHOLOMEW COUNTY, INDIANA. THE ACCURACY OF THIS FLOOD HAZARD STATEMENT IS SUBJECT TO MAP SCALE UNCERTAINTY AND TO ANY OTHER UNCERTAINTY IN LOCATION OR ELEVATION ON THE REFERENCED FLOOD INSURANCE RATE MAP.

BENCHMARKS:

UNLESS OTHERWISE NOTED, ELEVATIONS SHOWN HEREON ARE BASED UPON AN OPUS SOLUTION AND ARE ON THE 1988 NORTH AMERICAN VERTICAL DATUM (NAVD88 (GEOID 18)). IT IS MY OPINION THAT THE UNCERTAINTY IN THE ELEVATION OF THE PROJECT BENCHMARK DOES NOT EXCEED 0.10 FOOT.

TBM#1: SET MAG NAIL IN CONCRETE AT THE SOUTH END OF A MEDIAN LOCATED AT THE INTERSECTION OF TIPTON LAKES BLVD. AND WESTBROOK CT.
ELEV. = 673.65

TBM#2: SET MAG NAIL WEST SIDE OF MEDIAN 400'± SOUTH OF INTERSECTION OF TIPTON LAKES BLVD AND WESTBROOK COURT.
ELEV. = 666.55

TBM#3: SET MAG NAIL IN CONCRETE AT THE NORTH END OF A MEDIAN LOCATED AT THE INTERSECTION OF TIPTON LAKES BLVD AND SCARBOROUGH DR.
ELEV. = 655.56

GRADING LEGEND:

945	PROPOSED INDEX CONTOUR
944	PROPOSED INTERMEDIATE CONTOUR
	PROPOSED DRAINAGE SWALE
	PROPOSED GRADE BREAK
	PROPOSED STORM SEWER LINE
5.00%	PROPOSED SLOPE LABEL
945.00	PROPOSED SPOT ELEVATION
945.50 / 945.00	TOP OF CURB ELEVATION / BOTTOM OF CURB ELEVATION

ABBREVIATIONS:
ME = MATCH EXISTING
HP = HIGH POINT
LP = LOW POINT
GB = GRADE BREAK
TW = TOP OF WALL
BW = BOTTOM OF WALL

UTILITY NOTE:

THE UNDERGROUND UTILITIES SHOWN HAVE BEEN LOCATED FROM FIELD SURVEY INFORMATION AND EXISTING DRAWINGS. THE SURVEYOR MAKES NO GUARANTEES THAT THE UNDERGROUND UTILITIES COMPRISE ALL SUCH UTILITIES IN THE AREA, EITHER IN-SERVICE OR ABANDONED. THE SURVEYOR FURTHER DOES NOT WARRANT THAT THE UNDERGROUND UTILITIES SHOWN ARE IN THE EXACT LOCATION INDICATED ALTHOUGH THE SURVEYOR DOES CERTIFY THAT THEY ARE LOCATED AS ACCURATELY AS POSSIBLE FROM INFORMATION AVAILABLE. THE SURVEYOR HAS NOT PHYSICALLY LOCATED THE UNDERGROUND UTILITIES. INDIANA 811 ONE-CALL PUBLIC UTILITY LOCATE SERVICE TICKET NUMBERS 2405235264 AND 2405235311 WERE ISSUED FOR THIS SITE.

PRIOR TO ANY EXCAVATION FOR UNDERGROUND UTILITIES, THE CONTRACTOR SHALL EXPOSE AND VERIFY LOCATIONS (HORIZONTAL AND VERTICAL) OF ALL EXISTING UTILITIES INCLUDING BUT NOT LIMITED TO GAS, WATER, AND SANITARY SEWER. ANY CONFLICTS SHALL BE REPORTED IMMEDIATELY TO THE ENGINEER AND THE APPROPRIATE AUTHORITIES.

SCALE IN FEET
0 20 40

Indiana 811
Know what's below. Call before you dig.

BCSC TOGETHER WE LEARN

CSO
8831 Keystone Crossing, Indianapolis, IN 46240
317.848.7800 | csoinc.net

© 2018 CSO Architects, Inc. All Rights Reserved

Höweler+Yoon Architecture
617.517.4101 howeleryoon.com

Civil & Environmental Consultants, Inc.
530 E. Ohio Street · Suite G
Indianapolis, IN 46204
317-655-7777 · 877-746-0749
www.ceiinc.com

PROJECT:
BARTHOLOMEW CONSOLIDATED SCHOOL CORPORATION
MAPLE GROVE ELEMENTARY SCHOOL

SCOPE DRAWINGS:
These drawings indicate the general scope of the project in terms of architectural design concept, the dimensions of the building, the major architectural elements and the type of construction and mechanical systems to be used.
The drawings do not necessarily indicate or describe all work required for full performance and completion of the requirements of the Contract.
On the basis of the general scope indicated or described, the bidders/contractors shall furnish all items required for the proper execution and completion of the work.

REVISIONS:
2 06/17/2025 - ADDENDUM #02

ISSUE DATE	DRAWN BY	CHECKED BY
05/30/25	BEB	JMP

DRAWING TITLE:
GRADING PLAN

CERTIFIED BY:
JONATHAN M. PASLYK
REGISTERED
No. PE12100829
STATE OF INDIANA
PROFESSIONAL ENGINEER
05/30/2025

DRAWING NUMBER
C301 2

PROJECT NUMBER
2024022

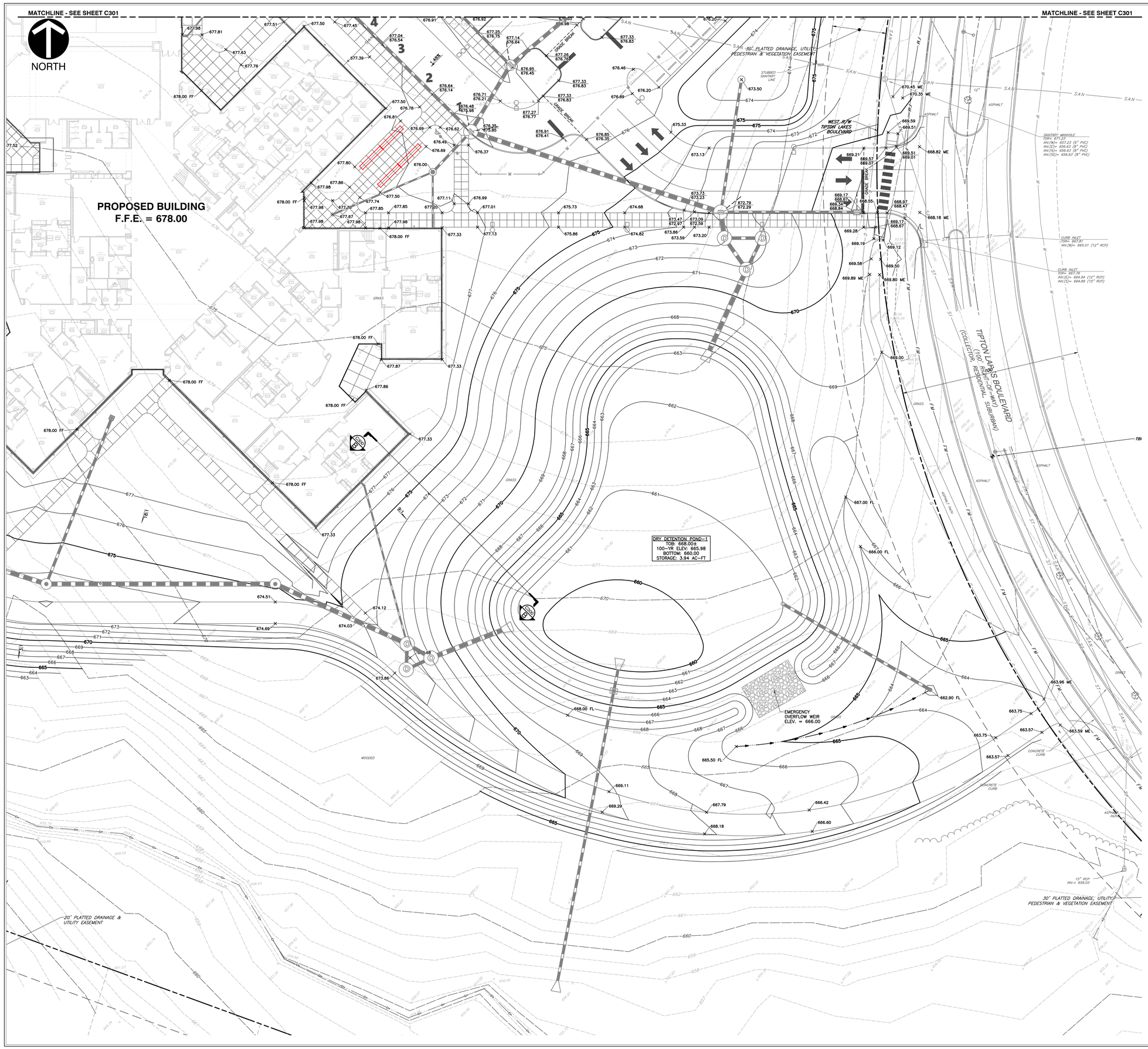

GENERAL GRADING NOTES:

1. CONTRACTOR SHALL STRICTLY ADHERE TO THE EROSION CONTROL MEASURES PREPARED FOR THIS PROJECT.
2. EARTHWORK SHALL INCLUDE CLEARING AND GRUBBING, STRIPPING AND STOCKPILING TOPSOIL, MASS GRADING, EXCAVATION, FILLING, UNDER CUT AND REPLACEMENT, IF REQUIRED, AND COMPACTION.
3. CONTRACTOR TO REFILL UNDERCUT AREAS WITH SUITABLE MATERIAL AND COMPACT AS RECOMMENDED BY THE GEOTECHNICAL ENGINEER.
4. PLACE TOPSOIL OVER THE SUBGRADE OF UNPAVED, DISTURBED AREAS TOA DEPTH INDICATED ON THE LANDSCAPE PLANS (6" MINIMUM). PAVEMENT SLOPES ACROSS ACCESSIBLE PARKING STALLS AND ADJOINING ACCESS AISLES SHALL BE MAXIMUM 2%.
5. ALL SLOPES SHALL BE 3:1 (HORIZONTAL:VERTICAL) MAXIMUM UNLESS NOTED OTHERWISE.
6. ALL AREAS NOT PAVED SHALL BE STABILIZED IN ACCORDANCE WITH THE EROSION CONTROL PLAN, UNLESS NOTED OTHERWISE.
7. ALL EXCESS SOIL MATERIALS SHALL BECOME THE PROPERTY OF THE CONTRACTOR UNLESS OTHERWISE DESIGNATED SHALL BE REMOVED BY THE CONTRACTOR AND DISPOSED OF OFFSITE AT NO ADDITIONAL COST TO THE OWNER IN ACCORDANCE WITH ALL LOCAL AND STATE CODES AND PERMIT REQUIREMENTS.
8. DRAINAGE SYSTEMS SHALL BE INSPECTED DURING CONSTRUCTION BY A REGISTERED PROFESSIONAL ENGINEER OR LAND SURVEYOR. WITHIN 30 DAYS AFTER COMPLETION OF ON AND OFF-SITE DRAINAGE FACILITIES, THE REGISTERED PROFESSIONAL SHALL CERTIFY IN WRITING THE COMPLIANCE OF THE DRAINAGE FACILITIES PER LOCAL REQUIREMENTS.
9. CONTRACTOR SHALL PERPETUATE ALL DRAINS AND TILES ENCOUNTERED DURING CONSTRUCTION. COORDINATE WITH ENGINEER OF RECORD REGARDING THE CONNECTION TO THE PROPOSED STORM SEWER SYSTEM.
10. STORM STRUCTURES RECEIVING SUB-SURFACE DRAINS (SSD) SHALL HAVE BOTH CONNECTIONS CORE DRILLED. T OR Y BLIND CONNECTIONS ARE NOT ALLOWED.
11. REFER TO AND FOLLOW THE RECOMMENDATIONS OF THE GEOTECHNICAL REPORT.

FLOOD NOTE:

THE PARCEL DESCRIBED AND SHOWN HEREIN LIES WITHIN ZONE "X" (UN-SHADED) AS SAID PARCEL PLOTS ON MAP NUMBERS 18005C0110E AND 18005C0128E (DATED DECEMBER 9, 2014) OF THE FLOOD INSURANCE RATE MAPS FOR BARTHOLOMEW COUNTY, INDIANA. THE ACCURACY OF THIS FLOOD HAZARD STATEMENT IS SUBJECT TO MAP SCALE UNCERTAINTY AND TO ANY OTHER UNCERTAINTY IN LOCATION OR ELEVATION ON THE REFERENCED FLOOD INSURANCE RATE MAP.

BENCHMARKS:

UNLESS OTHERWISE NOTED, ELEVATIONS SHOWN HEREON ARE BASED UPON AN OPUS SOLUTION AND ARE ON THE 1988 NORTH AMERICAN VERTICAL DATUM (NAVD88 (GEOID 18)). IT IS MY OPINION THAT THE UNCERTAINTY IN THE ELEVATION OF THE PROJECT BENCHMARK DOES NOT EXCEED 0.10 FOOT.

TBM#1: SET MAG NAIL IN CONCRETE AT THE SOUTH END OF A MEDIAN LOCATED AT THE INTERSECTION OF TIPTON LAKES BLVD. AND WESTBROOK CT.

ELEV. = 673.65

TBM#2: SET MAG NAIL WEST SIDE OF MEDIAN 400'± SOUTH OF INTERSECTION OF TIPTON LAKES BLVD AND WESTBROOK COURT.

ELEV. = 666.55

TBM#3: SET MAG NAIL IN CONCRETE AT THE NORTH END OF A MEDIAN LOCATED AT THE INTERSECTION OF TIPTON LAKES BLVD AND SCARBOROUGH DR.

ELEV. = 655.56

GRADING LEGEND:

945	PROPOSED INDEX CONTOUR
944	PROPOSED INTERMEDIATE CONTOUR
	PROPOSED DRAINAGE SWALE
	PROPOSED GRADE BREAK
	PROPOSED STORM SEWER LINE
5.00%	PROPOSED SLOPE LABEL
945.00	PROPOSED SPOT ELEVATION
945.50 / 945.00	TOP OF CURB ELEVATION / BOTTOM OF CURB ELEVATION

ABBREVIATIONS:
ME = MATCH EXISTING
HP = HIGH POINT
LP = LOW POINT
GB = GRADE BREAK
TW = TOP OF WALL
BW = BOTTOM OF WALL

UTILITY NOTE:

THE UNDERGROUND UTILITIES SHOWN HAVE BEEN LOCATED FROM FIELD SURVEY INFORMATION AND EXISTING DRAWINGS. THE SURVEYOR MAKES NO GUARANTEES THAT THE UNDERGROUND UTILITIES COMPRISE ALL SUCH UTILITIES IN THE AREA, EITHER IN-SERVICE OR ABANDONED. THE SURVEYOR FURTHER DOES NOT WARRANT THAT THE UNDERGROUND UTILITIES SHOWN ARE IN THE EXACT LOCATION INDICATED ALTHOUGH THE SURVEYOR DOES CERTIFY THAT THEY ARE LOCATED AS ACCURATELY AS POSSIBLE FROM INFORMATION AVAILABLE. THE SURVEYOR HAS NOT PHYSICALLY LOCATED THE UNDERGROUND UTILITIES. INDIANA 811 ONE-CALL PUBLIC UTILITY LOCATE SERVICE TICKET NUMBERS 2405235264 AND 2405235311 WERE ISSUED FOR THIS SITE.

PRIOR TO ANY EXCAVATION FOR UNDERGROUND UTILITIES, THE CONTRACTOR SHALL EXPOSE AND VERIFY LOCATIONS (HORIZONTAL AND VERTICAL) OF ALL EXISTING UTILITIES INCLUDING BUT NOT LIMITED TO GAS, WATER, AND SANITARY SEWER. ANY CONFLICTS SHALL BE REPORTED IMMEDIATELY TO THE ENGINEER AND THE APPROPRIATE AUTHORITIES.

Know what's below. Call before you dig.

BCSC TOGETHER WE LEARN

CSO
8831 Keystone Crossing, Indianapolis, IN 46240
317.848.7800 | csoinc.net

© 2018 CSO Architects, Inc. All Rights Reserved

Höweler+Yoon Architecture
617.517.4101 howeleryoon.com

Civil & Environmental Consultants, Inc.
530 E. Ohio Street · Suite G
Indianapolis, IN 46204
317-655-7777 · 877-746-0749
www.ceiinc.com

PROJECT:
BARTHOLOMEW CONSOLIDATED SCHOOL CORPORATION
MAPLE GROVE ELEMENTARY SCHOOL

SCOPE DRAWINGS:
These drawings indicate the general scope of the project in terms of major equipment and major dimensions of building, the major architectural elements and the type of structural, mechanical and electrical systems.
The drawings do not necessarily indicate or describe all work required for full performance and completion of the requirements of the contract.
On the basis of the general scope indicated or described, the trade contractors shall furnish all items required for the proper execution and completion of the work.

REVISIONS:
2 06/17/2025 - ADDENDUM #02

ISSUE DATE	DRAWN BY	CHECKED BY
05/30/25	BEB	JMP

DRAWING TITLE:
GRADING PLAN

CERTIFIED BY:
JONATHAN M. PASYK REGISTERED No. PE12100829 STATE OF INDIANA PROFESSIONAL ENGINEER
05/30/2025

DRAWING NUMBER
C302 2

PROJECT NUMBER
2024022

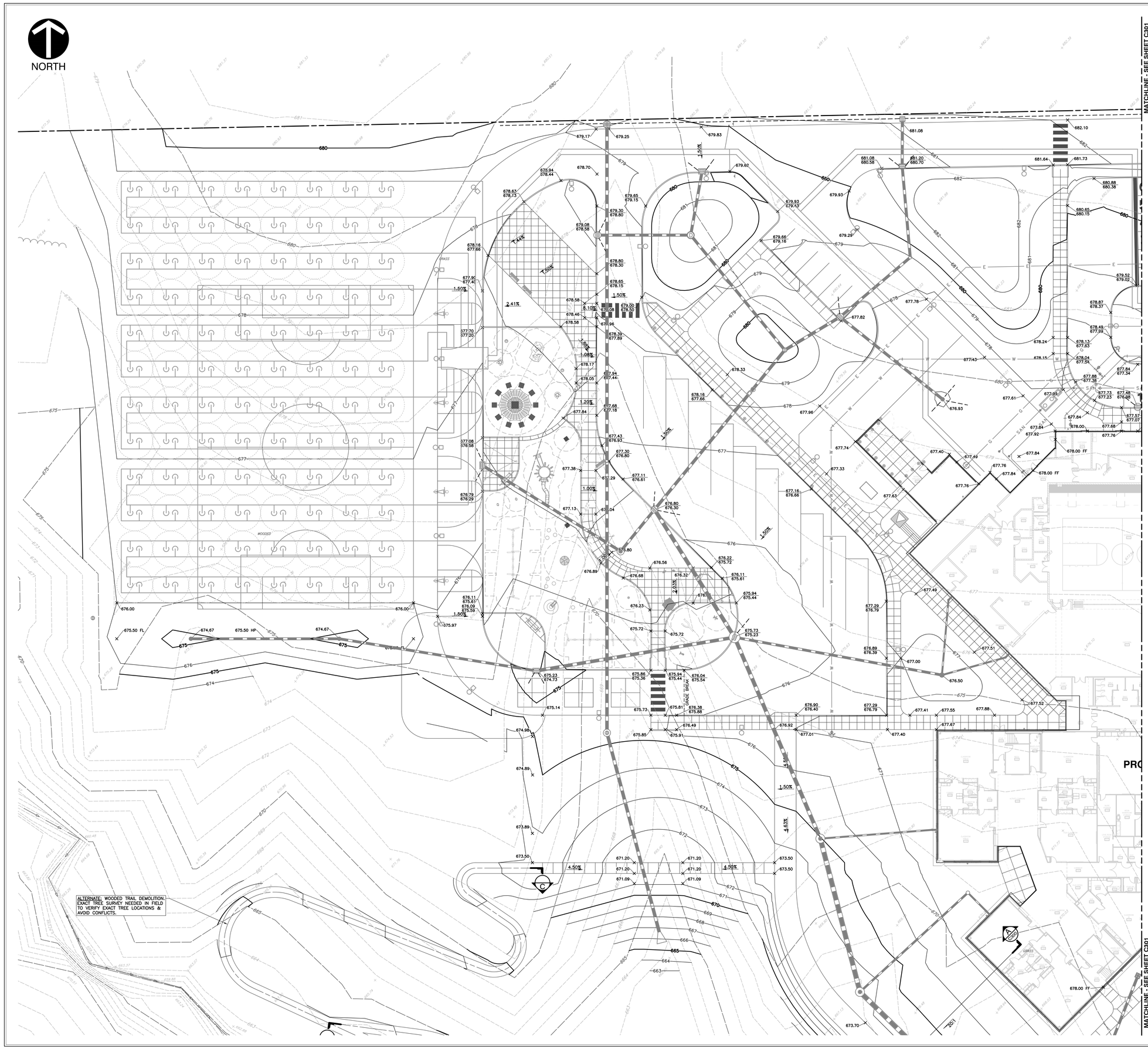

GENERAL GRADING NOTES:

1. CONTRACTOR SHALL STRICTLY ADHERE TO THE EROSION CONTROL MEASURES PREPARED FOR THIS PROJECT.
2. EARTHWORK SHALL INCLUDE CLEARING AND GRUBBING, STRIPPING AND STOCKPILING TOPSOIL, MASS GRADING, EXCAVATION, FILLING, UNDER CUT AND REPLACEMENT, IF REQUIRED, AND COMPACTION.
3. CONTRACTOR TO REFILL UNDERCUT AREAS WITH SUITABLE MATERIAL AND COMPACT AS RECOMMENDED BY THE GEOTECHNICAL ENGINEER.
4. PLACE TOPSOIL OVER THE SUBGRADE OF UNPAVED, DISTURBED AREAS TOA DEPTH INDICATED ON THE LANDSCAPE PLANS (6" MINIMUM). PAVEMENT SLOPES ACROSS ACCESSIBLE PARKING STALLS AND ADJOINING ACCESS AISLES SHALL BE MAXIMUM 2%.
5. ALL SLOPES SHALL BE 3:1 (HORIZONTAL:VERTICAL) MAXIMUM UNLESS NOTED OTHERWISE.
6. ALL AREAS NOT PAVED SHALL BE STABILIZED IN ACCORDANCE WITH THE EROSION CONTROL PLAN, UNLESS NOTED OTHERWISE.
7. ALL EXCESS SOIL MATERIALS SHALL BECOME THE PROPERTY OF THE CONTRACTOR UNLESS OTHERWISE DESIGNATED SHALL BE REMOVED BY THE CONTRACTOR AND DISPOSED OF OFFSITE AT NO ADDITIONAL COST TO THE OWNER IN ACCORDANCE WITH ALL LOCAL AND STATE CODES AND PERMIT REQUIREMENTS.
8. DRAINAGE SYSTEMS SHALL BE INSPECTED DURING CONSTRUCTION BY A REGISTERED PROFESSIONAL ENGINEER OR LAND SURVEYOR. WITHIN 30 DAYS AFTER COMPLETION OF ON AND OFF-SITE DRAINAGE FACILITIES, THE REGISTERED PROFESSIONAL SHALL CERTIFY IN WRITING THE COMPLIANCE OF THE DRAINAGE FACILITIES PER LOCAL REQUIREMENTS.
9. CONTRACTOR SHALL PERPETUATE ALL DRAINS AND TILES ENCOUNTERED DURING CONSTRUCTION. COORDINATE WITH ENGINEER OF RECORD REGARDING THE CONNECTION TO THE PROPOSED STORM SEWER SYSTEM.
10. STORM STRUCTURES RECEIVING SUB-SURFACE DRAINS (SSD) SHALL HAVE BOTH CONNECTIONS CORE DRILLED. T OR Y BLIND CONNECTIONS ARE NOT ALLOWED.
11. REFER TO AND FOLLOW THE RECOMMENDATIONS OF THE GEOTECHNICAL REPORT.

FLOOD NOTE:

THE PARCEL DESCRIBED AND SHOWN HEREIN LIES WITHIN ZONE "X" (UN-SHADED) AS SAID PARCEL PLOTS ON MAP NUMBERS 18005C0110E AND 18005C0128E (DATED DECEMBER 9, 2014) OF THE FLOOD INSURANCE RATE MAPS FOR BARTHOLOMEW COUNTY, INDIANA. THE ACCURACY OF THIS FLOOD HAZARD STATEMENT IS SUBJECT TO MAP SCALE UNCERTAINTY AND TO ANY OTHER UNCERTAINTY IN LOCATION OR ELEVATION ON THE REFERENCED FLOOD INSURANCE RATE MAP.

BENCHMARKS:

UNLESS OTHERWISE NOTED, ELEVATIONS SHOWN HEREON ARE BASED UPON AN OPUS SOLUTION AND ARE ON THE 1988 NORTH AMERICAN VERTICAL DATUM (NAVD88 (GEOID 18)). IT IS MY OPINION THAT THE UNCERTAINTY IN THE ELEVATION OF THE PROJECT BENCHMARK DOES NOT EXCEED 0.10 FOOT.

TBM#1: SET MAG NAIL IN CONCRETE AT THE SOUTH END OF A MEDIAN LOCATED AT THE INTERSECTION OF TIPTON LAKES BLVD. AND WESTBROOK CT.
ELEV. = 673.65

TBM#2: SET MAG NAIL WEST SIDE OF MEDIAN 400'± SOUTH OF INTERSECTION OF TIPTON LAKES BLVD AND WESTBROOK COURT.
ELEV. = 666.55

TBM#3: SET MAG NAIL IN CONCRETE AT THE NORTH END OF A MEDIAN LOCATED AT THE INTERSECTION OF TIPTON LAKES BLVD AND SCARBOROUGH DR.
ELEV. = 655.56

GRADING LEGEND:

945	PROPOSED INDEX CONTOUR
944	PROPOSED INTERMEDIATE CONTOUR
	PROPOSED DRAINAGE SWALE
	PROPOSED GRADE BREAK
	PROPOSED STORM SEWER LINE
5.00%	PROPOSED SLOPE LABEL
945.00	PROPOSED SPOT ELEVATION
945.50 / 945.00	TOP OF CURB ELEVATION / BOTTOM OF CURB ELEVATION

ABBREVIATIONS:
ME = MATCH EXISTING
HP = HIGH POINT
LP = LOW POINT
GB = GRADE BREAK
TW = TOP OF WALL
BW = BOTTOM OF WALL

UTILITY NOTE:

THE UNDERGROUND UTILITIES SHOWN HAVE BEEN LOCATED FROM FIELD SURVEY INFORMATION AND EXISTING DRAWINGS. THE SURVEYOR MAKES NO GUARANTEES THAT THE UNDERGROUND UTILITIES COMPRISE ALL SUCH UTILITIES IN THE AREA, EITHER IN-SERVICE OR ABANDONED. THE SURVEYOR FURTHER DOES NOT WARRANT THAT THE UNDERGROUND UTILITIES SHOWN ARE IN THE EXACT LOCATION INDICATED ALTHOUGH THE SURVEYOR DOES CERTIFY THAT THEY ARE LOCATED AS ACCURATELY AS POSSIBLE FROM INFORMATION AVAILABLE. THE SURVEYOR HAS NOT PHYSICALLY LOCATED THE UNDERGROUND UTILITIES. INDIANA 811 ONE-CALL PUBLIC UTILITY LOCATE SERVICE TICKET NUMBERS 2405235264 AND 2405235311 WERE ISSUED FOR THIS SITE.

PRIOR TO ANY EXCAVATION FOR UNDERGROUND UTILITIES, THE CONTRACTOR SHALL EXPOSE AND VERIFY LOCATIONS (HORIZONTAL AND VERTICAL) OF ALL EXISTING UTILITIES INCLUDING BUT NOT LIMITED TO GAS, WATER, AND SANITARY SEWER. ANY CONFLICTS SHALL BE REPORTED IMMEDIATELY TO THE ENGINEER AND THE APPROPRIATE AUTHORITIES.

SCALE IN FEET
0 20 40

Indiana 811
Know what's below. Call before you dig.

BCSC TOGETHER WE LEARN

CSO
8831 Keystone Crossing, Indianapolis, IN 46240
317.848.7800 | csoinc.net
© 2018 CSO Architects, Inc. All Rights Reserved

Höweler+Yoon Architecture
617.517.4101 howeleryoon.com

Civil & Environmental Consultants, Inc.
530 E. Ohio Street · Suite G
Indianapolis, IN 46204
317-655-7777 · 877-746-0749
www.ceiinc.com

PROJECT:
BARTHOLOMEW CONSOLIDATED SCHOOL CORPORATION
MAPLE GROVE ELEMENTARY SCHOOL

SCOPE DRAWINGS:
These drawings indicate the general scope of the project. Information shown represents the approximate dimensions of the building, the major architectural elements and the type of structural, mechanical and electrical systems.
The drawings do not necessarily indicate or describe all work required for full performance and completion of the contracted work. The work.
On the basis of the general scope indicated or described, the trade contractors shall furnish all items required for the proper execution and completion of the work.

REVISIONS:
2 06/17/2025 - ADDENDUM #02

ISSUE DATE	DRAWN BY	CHECKED BY
05/30/25	BEB	JMP

DRAWING TITLE:
GRADING PLAN

CERTIFIED BY:
JONATHAN M. PASYK REGISTERED No. PE12100829 STATE OF INDIANA PROFESSIONAL ENGINEER
05/30/2025

DRAWING NUMBER
C303 2

PROJECT NUMBER
2024022

GENERAL GRADING NOTES:

1. CONTRACTOR SHALL STRICTLY ADHERE TO THE EROSION CONTROL MEASURES PREPARED FOR THIS PROJECT.
2. EARTHWORK SHALL INCLUDE CLEARING AND GRUBBING, STRIPPING AND STOCKPILING TOPSOIL, MASS GRADING, EXCAVATION, FILLING, UNDER CUT AND REPLACEMENT, IF REQUIRED, AND COMPACTION.
3. CONTRACTOR TO REFILL UNDERCUT AREAS WITH SUITABLE MATERIAL AND COMPACT AS RECOMMENDED BY THE GEOTECHNICAL ENGINEER.
4. PLACE TOPSOIL OVER THE SUBGRADE OF UNPAVED, DISTURBED AREAS TOA DEPTH INDICATED ON THE LANDSCAPE PLANS (6" MINIMUM). PAVEMENT SLOPES ACROSS ACCESSIBLE PARKING STALLS AND ADJOINING ACCESS AISLES SHALL BE MAXIMUM 2%.
5. ALL SLOPES SHALL BE 3:1 (HORIZONTAL:VERTICAL) MAXIMUM UNLESS NOTED OTHERWISE.
6. ALL AREAS NOT PAVED SHALL BE STABILIZED IN ACCORDANCE WITH THE EROSION CONTROL PLAN, UNLESS NOTED OTHERWISE.
7. ALL EXCESS SOIL MATERIALS SHALL BECOME THE PROPERTY OF THE CONTRACTOR UNLESS OTHERWISE DESIGNATED SHALL BE REMOVED BY THE CONTRACTOR AND DISPOSED OF OFFSITE AT NO ADDITIONAL COST TO THE OWNER IN ACCORDANCE WITH ALL LOCAL AND STATE CODES AND PERMIT REQUIREMENTS.
8. DRAINAGE SYSTEMS SHALL BE INSPECTED DURING CONSTRUCTION BY A REGISTERED PROFESSIONAL ENGINEER OR LAND SURVEYOR. WITHIN 30 DAYS AFTER COMPLETION OF ON AND OFF-SITE DRAINAGE FACILITIES, THE REGISTERED PROFESSIONAL SHALL CERTIFY IN WRITING THE COMPLIANCE OF THE DRAINAGE FACILITIES PER LOCAL REQUIREMENTS.
9. CONTRACTOR SHALL PERPETUATE ALL DRAINS AND TILES ENCOUNTERED DURING CONSTRUCTION. COORDINATE WITH ENGINEER OF RECORD REGARDING THE CONNECTION TO THE PROPOSED STORM SEWER SYSTEM.
10. STORM STRUCTURES RECEIVING SUB-SURFACE DRAINS (SSD) SHALL HAVE BOTH CONNECTIONS CORE DRILLED. T OR Y BLIND CONNECTIONS ARE NOT ALLOWED.
11. REFER TO AND FOLLOW THE RECOMMENDATIONS OF THE GEOTECHNICAL REPORT.

FLOOD NOTE:

THE PARCEL DESCRIBED AND SHOWN HEREIN LIES WITHIN ZONE "X" (UN-SHADED) AS SAID PARCEL PLOTS ON MAP NUMBERS 18005C0110E AND 18005C0128E (DATED DECEMBER 9, 2014) OF THE FLOOD INSURANCE RATE MAPS FOR BARTHOLOMEW COUNTY, INDIANA. THE ACCURACY OF THIS FLOOD HAZARD STATEMENT IS SUBJECT TO MAP SCALE UNCERTAINTY AND TO ANY OTHER UNCERTAINTY IN LOCATION OR ELEVATION ON THE REFERENCED FLOOD INSURANCE RATE MAP.

BENCHMARKS:

UNLESS OTHERWISE NOTED, ELEVATIONS SHOWN HEREON ARE BASED UPON AN OPUS SOLUTION AND ARE ON THE 1988 NORTH AMERICAN VERTICAL DATUM (NAVD88 (GEOID 18)). IT IS MY OPINION THAT THE UNCERTAINTY IN THE ELEVATION OF THE PROJECT BENCHMARK DOES NOT EXCEED 0.10 FOOT.

TBM#1: SET MAG NAIL IN CONCRETE AT THE SOUTH END OF A MEDIAN LOCATED AT THE INTERSECTION OF TIPTON LAKES BLVD. AND WESTBROOK CT.
ELEV. = 673.65

TBM#2: SET MAG NAIL WEST SIDE OF MEDIAN 400'± SOUTH OF INTERSECTION OF TIPTON LAKES BLVD AND WESTBROOK COURT.
ELEV. = 666.55

TBM#3: SET MAG NAIL IN CONCRETE AT THE NORTH END OF A MEDIAN LOCATED AT THE INTERSECTION OF TIPTON LAKES BLVD AND SCARBOROUGH DR.
ELEV. = 655.56

GRADING LEGEND:

945	PROPOSED INDEX CONTOUR
944	PROPOSED INTERMEDIATE CONTOUR
	PROPOSED DRAINAGE SWALE
	PROPOSED GRADE BREAK
	PROPOSED STORM SEWER LINE
5.00%	PROPOSED SLOPE LABEL
945.00	PROPOSED SPOT ELEVATION
945.50 / 945.00	TOP OF CURB ELEVATION / BOTTOM OF CURB ELEVATION

ABBREVIATIONS:
ME = MATCH EXISTING
HP = HIGH POINT
LP = LOW POINT
GB = GRADE BREAK
TW = TOP OF WALL
BW = BOTTOM OF WALL

UTILITY NOTE:

THE UNDERGROUND UTILITIES SHOWN HAVE BEEN LOCATED FROM FIELD SURVEY INFORMATION AND EXISTING DRAWINGS. THE SURVEYOR MAKES NO GUARANTEES THAT THE UNDERGROUND UTILITIES COMPRISE ALL SUCH UTILITIES IN THE AREA, EITHER IN-SERVICE OR ABANDONED. THE SURVEYOR FURTHER DOES NOT WARRANT THAT THE UNDERGROUND UTILITIES SHOWN ARE IN THE EXACT LOCATION INDICATED ALTHOUGH THE SURVEYOR DOES CERTIFY THAT THEY ARE LOCATED AS ACCURATELY AS POSSIBLE FROM INFORMATION AVAILABLE. THE SURVEYOR HAS NOT PHYSICALLY LOCATED THE UNDERGROUND UTILITIES. INDIANA 811 ONE-CALL PUBLIC UTILITY LOCATE SERVICE TICKET NUMBERS 2405235264 AND 2405235311 WERE ISSUED FOR THIS SITE.

PRIOR TO ANY EXCAVATION FOR UNDERGROUND UTILITIES, THE CONTRACTOR SHALL EXPOSE AND VERIFY LOCATIONS (HORIZONTAL AND VERTICAL) OF ALL EXISTING UTILITIES INCLUDING BUT NOT LIMITED TO GAS, WATER, AND SANITARY SEWER. ANY CONFLICTS SHALL BE REPORTED IMMEDIATELY TO THE ENGINEER AND THE APPROPRIATE AUTHORITIES.

SCALE IN FEET
0 40 80

Indiana 811
Know what's below. Call before you dig.

BCSC
TOGETHER WE LEARN

CSO
8831 Keystone Crossing, Indianapolis, IN 46240
317.848.7800 | csoinc.net

© 2018 CSO Architects, Inc. All Rights Reserved

Höweler+Yoon Architecture
617.517.4101 howeleryoon.com

CEC
Civil & Environmental Consultants, Inc.
530 E. Ohio Street · Suite G
Indianapolis, IN 46204
317-655-7777 · 877-746-0749
www.cecinc.com

PROJECT:
BARTHOLOMEW CONSOLIDATED SCHOOL CORPORATION
MAPLE GROVE ELEMENTARY SCHOOL

SCOPE DRAWINGS:
These drawings indicate the general scope of the project in terms of architectural design concept, the dimensions of the building, the major architectural elements and the type of structural, mechanical and electrical systems. The specifications and these drawings indicate and describe all work required for full performance and completion of the requirements of the Contract.
On the basis of the general scope indicated or described the trade contractors shall furnish all items required for the proper execution and completion of the work.

REVISIONS:
2 06/17/2025 - ADDENDUM #02

ISSUE DATE	DRAWN BY	CHECKED BY
05/30/25	BEB	JMP

DRAWING TITLE:
OVERALL FLOOD ROUTING PLAN

CERTIFIED BY:
JONATHAN M. PAPE
REGISTERED
No. PE12100829
STATE OF INDIANA
PROFESSIONAL ENGINEER
05/30/2025

DRAWING NUMBER
C304 2

PROJECT NUMBER
2024022

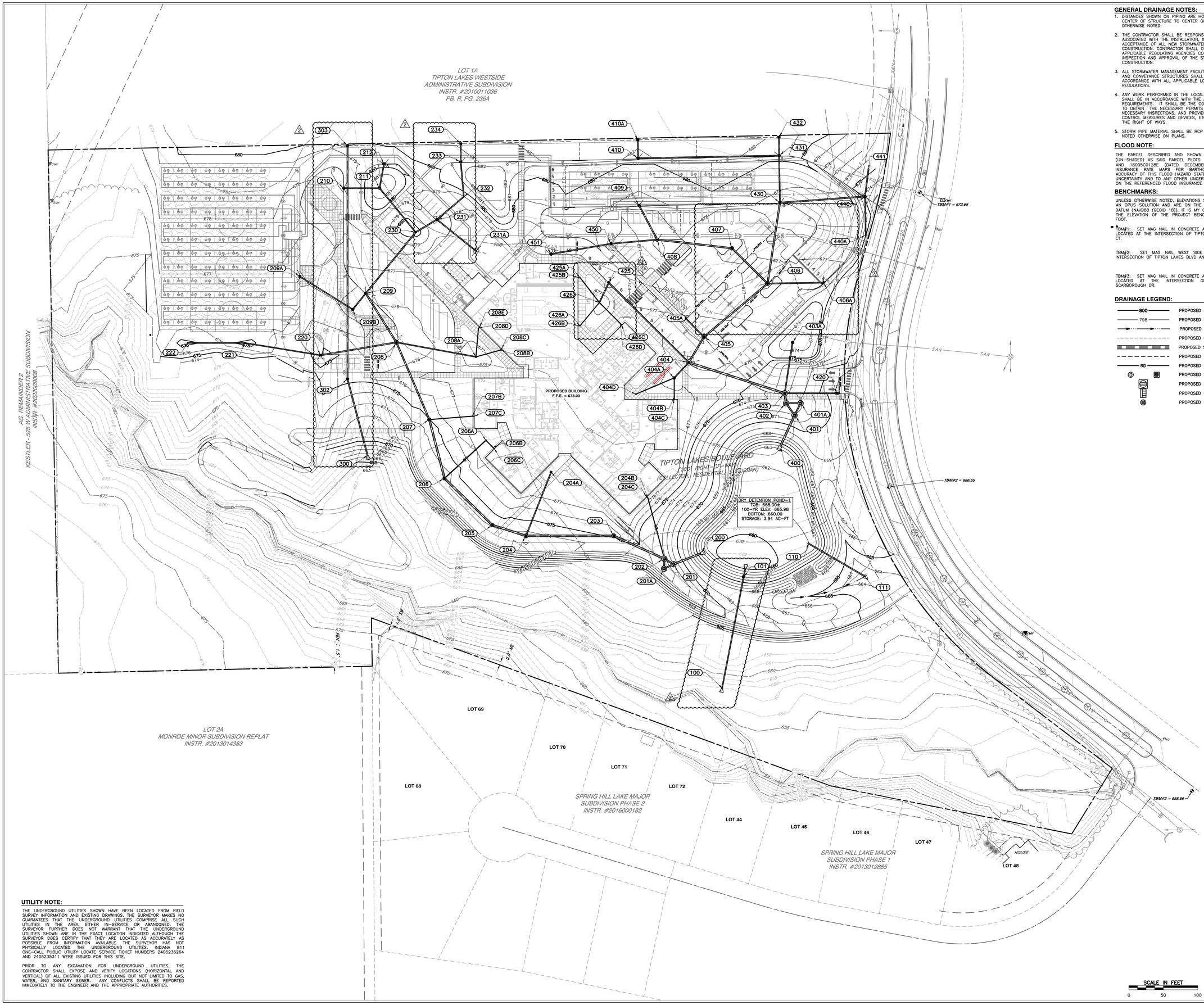

GENERAL DRAINAGE NOTES:

1. DISTANCES SHOWN ON PIPING ARE HORIZONTAL DISTANCES FROM CENTER OF STRUCTURE TO CENTER OF STRUCTURE, UNLESS OTHERWISE NOTED.
2. THE CONTRACTOR SHALL BE RESPONSIBLE FOR ALL COSTS ASSOCIATED WITH THE INSTALLATION, INSPECTION, TESTING AND FINAL ACCEPTANCE OF ALL NEW STORMWATER MANAGEMENT FACILITIES CONSTRUCTION. CONTRACTOR SHALL COORDINATE WITH ALL APPLICABLE REGULATING AGENCIES CONCERNING INSTALLATION, INSPECTION AND APPROVAL OF THE STORM DRAINAGE SYSTEM CONSTRUCTION.
3. ALL STORMWATER MANAGEMENT FACILITIES, INCLUDING COLLECTION AND CONVEYANCE STRUCTURES SHALL BE INSTALLED IN ACCORDANCE WITH ALL APPLICABLE LOCAL AND STATE CODES AND REGULATIONS.
4. ANY WORK PERFORMED IN THE LOCAL OR STATE RIGHT OF WAYS SHALL BE IN ACCORDANCE WITH THE APPLICABLE LOCAL OR STATE REQUIREMENTS. IT SHALL BE THE CONTRACTOR'S RESPONSIBILITY TO OBTAIN THE NECESSARY PERMITS FOR THE WORK, SCHEDULE NECESSARY INSPECTIONS, AND PROVIDE THE NECESSARY TRAFFIC CONTROL MEASURES AND DEVICES, ETC., FOR WORK PERFORMED IN THE RIGHT OF WAYS.
5. STORM PIPE MATERIAL SHALL BE RCP OR HDPE DUAL WALL UNLESS NOTED OTHERWISE ON PLANS.

FLOOD NOTE:

THE PARCEL DESCRIBED AND SHOWN HEREIN LIES WITHIN ZONE "X" (UN-SHADED) AS SAID PARCEL PLOTS ON MAP NUMBERS 18005C0110E AND 18005C0128E (DATED DECEMBER 9, 2014) OF THE FLOOD INSURANCE RATE MAPS FOR BARTHOLOMEW COUNTY, INDIANA. THE ACCURACY OF THIS FLOOD HAZARD STATEMENT IS SUBJECT TO MAP SCALE UNCERTAINTY AND TO ANY OTHER UNCERTAINTY IN LOCATION OR ELEVATION ON THE REFERENCED FLOOD INSURANCE RATE MAP.

BENCHMARKS:

UNLESS OTHERWISE NOTED, ELEVATIONS SHOWN HEREON ARE BASED UPON AN OPUS SOLUTION AND ARE ON THE 1988 NORTH AMERICAN VERTICAL DATUM (NAVD88 (GEOID 18)). IT IS MY OPINION THAT THE UNCERTAINTY IN THE ELEVATION OF THE PROJECT BENCHMARK DOES NOT EXCEED 0.10 FOOT.

TBM#1: SET MAG NAIL IN CONCRETE AT THE SOUTH END OF A MEDIAN LOCATED AT THE INTERSECTION OF TIPTON LAKES BLVD. AND WESTBROOK CT.

ELEV. = 673.65

TBM#2: SET MAG NAIL WEST SIDE OF MEDIAN 400'± SOUTH OF INTERSECTION OF TIPTON LAKES BLVD AND WESTBROOK COURT.

ELEV. = 666.55

TBM#3: SET MAG NAIL IN CONCRETE AT THE NORTH END OF A MEDIAN LOCATED AT THE INTERSECTION OF TIPTON LAKES BLVD AND SCARBOROUGH DR.

ELEV. = 655.56

DRAINAGE LEGEND:

800	PROPOSED INDEX CONTOUR
798	PROPOSED INTERMEDIATE CONTOUR
	PROPOSED DRAINAGE SWALE
	PROPOSED GRADE BREAK
	PROPOSED STORM SEWER LINE
	PROPOSED UNDERDRAIN
RD	PROPOSED ROOF DRAIN
	PROPOSED STORM MANHOLE, INLET
	PROPOSED BEEHIVE INLET SQUARE
	PROPOSED CURB INLET
	PROPOSED INLET (CIRCULAR)

UTILITY NOTE:

THE UNDERGROUND UTILITIES SHOWN HAVE BEEN LOCATED FROM FIELD SURVEY INFORMATION AND EXISTING DRAWINGS. THE SURVEYOR MAKES NO GUARANTEES THAT THE UNDERGROUND UTILITIES COMPRISE ALL SUCH UTILITIES IN THE AREA, EITHER IN-SERVICE OR ABANDONED. THE SURVEYOR FURTHER DOES NOT WARRANT THAT THE UNDERGROUND UTILITIES SHOWN ARE IN THE EXACT LOCATION INDICATED ALTHOUGH THE SURVEYOR DOES CERTIFY THAT THEY ARE LOCATED AS ACCURATELY AS POSSIBLE FROM INFORMATION AVAILABLE. THE SURVEYOR HAS NOT PHYSICALLY LOCATED THE UNDERGROUND UTILITIES. INDIANA 811 ONE-CALL PUBLIC UTILITY LOCATE SERVICE TICKET NUMBERS 2405235264 AND 2405235311 WERE ISSUED FOR THIS SITE.

PRIOR TO ANY EXCAVATION FOR UNDERGROUND UTILITIES, THE CONTRACTOR SHALL EXPOSE AND VERIFY LOCATIONS (HORIZONTAL AND VERTICAL) OF ALL EXISTING UTILITIES INCLUDING BUT NOT LIMITED TO GAS, WATER, AND SANITARY SEWER. ANY CONFLICTS SHALL BE REPORTED IMMEDIATELY TO THE ENGINEER AND THE APPROPRIATE AUTHORITIES.

Indiana 811
Know what's below. Call before you dig.

BCSC
TOGETHER WE LEARN

CSO
8831 Keystone Crossing, Indianapolis, IN 46240
317.848.7800 | csoinc.net

© 2018 CSO Architects, Inc. All Rights Reserved

Höweler+Yoon Architecture
617.517.4101 howeleryoon.com

Civil & Environmental Consultants, Inc.
530 E. Ohio Street · Suite G
Indianapolis, IN 46204
317-655-7777 · 877-746-0749
www.ceciinc.com

PROJECT:
BARTHOLOMEW CONSOLIDATED SCHOOL CORPORATION
MAPLE GROVE ELEMENTARY SCHOOL

SCOPE DRAWINGS:
These drawings indicate the general scope of the project in accordance with dimensions, notes and specifications. Dimensions of buildings, the major architectural elements and the type of structural, mechanical and electrical systems.
The drawings do not necessarily indicate or describe all work required for full performance and completion of the contracted work. The work.
On the basis of the general scope indicated or described, the trade contractors shall furnish all items required for the proper execution and completion of the work.

REVISIONS:
1 06/10/2025 - ADDENDUM #01
2 06/17/2025 - ADDENDUM #02

ISSUE DATE	DRAWN BY	CHECKED BY
05/30/25	BEB	JMP

DRAWING TITLE:
OVERALL STORMWATER PLAN

CERTIFIED BY:
JONATHAN M. PASYK
REGISTERED
No. PE12100829
STATE OF INDIANA
PROFESSIONAL ENGINEER
05/30/2025

DRAWING NUMBER
C400

PROJECT NUMBER
2024022

Structure Table				
Structure Name	RIM E.	INVERT IN	INVERT OUT	REMARKS
100	657.25	101 = 657.00		Conc. Flared End Section
101	666.17	102 = 659.00	101 = 658.90	OUTLET CONTROL STR. Inlet Type J NEENAH R-3455-C
102	660.75		102 = 659.50	Concrete Flared End Section
110	662.36	111 = 661.00		ADS Flared End Section
111	663.51		111 = 661.65	18IN-ADS Nyloplast Str.
200	667.38	201 = 664.25		Conc. Flared End Section
201	672.00	202 = 664.72 201A = 664.72	201 = 664.62	8'ø MANHOLE NEENAH R-1772
201A	673.66	202A = 664.89	201A = 664.79	WATER QUALITY AQUA-SWIRL XC-7
202	673.34	203 = 664.96 204B = 669.75	202A = 664.96 202 = 664.86	8'ø MANHOLE DIVERSION WEIR SEE DETAILS
203	675.16	204 = 665.77	203 = 665.67	6'ø MANHOLE NEENAH R-4342
204	673.60	205 = 666.99 204A = 672.00	204 = 666.89	6'ø MANHOLE NEENAH R-4342
204A	677.84		204A = 672.35	Inlet Type A NEENAH R-4342
204B	677.22	204C = 672.94	204B = 672.94	CLEANOUT
204C	673.94		204C = 673.00	ROOF DRAIN
205	674.11	206 = 667.54	205 = 667.44	5'ø MANHOLE NEENAH R-4342
206	673.25	207 = 668.50 206A = 669.00	206 = 668.40	5'ø MANHOLE NEENAH R-4342
206A	674.31	206B = 672.65	206A = 672.18	NYLOPLAST STR. FLAT GRATE
206B	674.68	206C = 672.94	206B = 672.94	CLEANOUT
206C	673.75		206C = 673.00	ROOF DRAIN
207	674.96	208 = 669.38 207B = 671.69	207 = 669.28	5'ø MANHOLE NEENAH R-4342
207B	674.65	207C = 672.94	207B = 672.94	CLEANOUT
207C	673.75		207C = 673.00	ROOF DRAIN
208	675.23	220 = 670.55 209 = 672.42 208A = 670.82	208 = 670.45	6'ø MANHOLE NEENAH R-3287-10V (CURB INLET)
208A	676.50	208B = 672.60 208D = 672.55	208A = 672.01	24" NYLOPLAST INLET FLAT GRATE
208B	674.68	208C = 672.97	208B = 672.97	CLEANOUT

Structure Table				
Structure Name	RIM E.	INVERT IN	INVERT OUT	REMARKS
208C	673.75		208C = 673.00	ROOF DRAIN
208D	674.68	208E = 672.97	208D = 672.97	CLEANOUT
208E	673.75		208E = 673.00	ROOF DRAIN
209	676.30	209B = 673.04 230 = 672.80	209 = 672.70	4'ø MANHOLE NEENAH R-3287-10V (CURB INLET)
209A	676.43		209A = 673.50	Inlet Type J NEENAH R-3287-10V (CURB INLET)
209B	676.77	209A = 673.23	209B = 673.13	4' ø MANHOLE NEENAH R-4342
210	678.59		210 = 675.59	4'ø MANHOLE NEENAH R-3287-10V (CURB INLET)
211	681.00	212 = 676.37 210 = 675.43	211 = 675.25	4'ø MANHOLE NEENAH R-4342
212	679.45		212 = 676.48	Inlet Type J NEENAH R-3472
220	674.73	221 = 670.99	220 = 670.89	Inlet Type J NEENAH R-3287-10V (CURB INLET)
221	674.67	222 = 671.42	221 = 671.32	15IN-ADS Nyloplast Str.
222	674.67		222 = 671.67	15IN-ADS Nyloplast Str.
230	680.00	231 = 673.37 211 = 675.00	230 = 673.20	24IN-ADS Nyloplast Str.
231	677.88	231A = 673.65 232 = 674.88	231 = 673.50	4'ø MANHOLE NEENAH R-3287-10V (CURB INLET)
231A	676.93		231A = 673.90	18IN-ADS NYLOPLAST STR.
232	678.98	233 = 676.00	232 = 675.13	15IN-ADS Nyloplast Str.
233	680.72	234 = 678.35	233 = 676.25	Inlet Type A NEENAH R-3472
234	681.51		234 = 678.50	Inlet Type A NEENAH R-4342
300	666.52	301 = 665.00		Conc. Flared End Section
302	675.21	303 = 666.97	301 = 666.70	4'ø MANHOLE NEENAH R-1772
303	678.86		303 = 672.05	4'ø MANHOLE NEENAH R-3457-C2
400	666.96	401 = 665.00		Conc. Flared End Section
401	671.80	401A = 665.25 402 = 665.25	401 = 665.25	8'ø MANHOLE NEENAH R-1772
401A	672.10	402A = 665.44	401A = 665.34	WATER QUALITY AQUA-SWIRL XC-7
402	673.02	403 = 665.62	402A = 665.53 402 = 665.52	8'ø MANHOLE DIVERSION WEIR SEE DETAIL

Structure Table				
Structure Name	RIM E.	INVERT IN	INVERT OUT	REMARKS
403	672.30	403A = 670.48 404 = 666.77 420 = 665.77	403 = 665.67	8'ø MANHOLE NEENAH R-3287-10V (CURB INLET)
403A	673.50		403A = 670.85	4'ø MANHOLE NEENAH R-4342
404	675.85	405 = 667.31 425 = 670.96 404A = 669.95	404 = 667.21	8'ø MANHOLE NEENAH R-3287-10V (CURB INLET)
404A	676.00	404B = 672.69 287 = 672.59	404A = 670.11	4'ø MANHOLE NEENAH R-3210-Q
404B	677.40	404C = 672.97	404B = 672.97	CLEANOUT
404C	673.75		404C = 673.00	ROOF DRAIN
404D	677.67		287 = 672.29	NYLOPLAST INLET PEDESTRIAN GRATE
405	676.46	405A = 672.85 406 = 667.61	405 = 667.51	6'ø MANHOLE NEENAH R-3287-10V (Curb Inlet)
405A	674.67		405A = 673.00	Inlet Type J NEENAH R-3287-10V (CURB INLET)
406	676.33	407 = 672.69 406A = 672.94 430 = 668.26	406 = 668.16	6'ø MANHOLE NEENAH R-3287-10V (Curb Inlet)
406A	676.22		406A = 673.22	Inlet Type J NEENAH R-3287-10V (CURB INLET)
407	676.60	408 = 673.01	407 = 672.91	4'ø MAMHOLE NEENAH R-3287-10V (CURB INLET)
408	677.24	409 = 673.44 450 = 673.44	408 = 673.34	4'ø MANHOLE NEENAH R-3287-10V (CURB INLET)
409	678.58		409 = 673.61	4'ø MANHOLE NEENAH R-3287-10V (CURB INLET)
410	681.79	410A = 676.48	410 = 676.38	4'ø MANHOLE NEENAH R-3472
410A	682.16		410A = 676.58	Inlet Type A NEENAH R-4342
420	668.85		420 = 666.00	Inlet Type J NEENAH R-3287-10V (CURB INLET)
425	676.36	426 = 672.00	425 = 671.50	Inlet Type J NEENAH R-3287-10V (CURB INLET)
425A	677.95	425B = 672.97	425A = 672.97	CLEANOUT
425B	673.75		425B = 673.00	ROOF DRAIN
426	676.50	426A = 672.53 426D = 672.54 425A = 672.52	426 = 672.32	4'ø MANHOLE NYLOPLAST INLET FLAT GRATE
426A	677.94	426B = 672.97	426A = 672.97	CLEANOUT
426B	673.57		426B = 673.00	ROOF DRAIN
426C	673.75		426C = 673.00	ROOF DRAIN
426D	674.68	426C = 672.97	426D = 672.97	CLEANOUT

GENERAL DRAINAGE NOTES:

1. DISTANCES SHOWN ON PIPING ARE HORIZONTAL DISTANCES FROM CENTER OF STRUCTURE TO CENTER OF STRUCTURE, UNLESS OTHERWISE NOTED.
2. THE CONTRACTOR SHALL BE RESPONSIBLE FOR ALL COSTS ASSOCIATED WITH THE INSTALLATION, INSPECTION, TESTING AND FINAL ACCEPTANCE OF ALL NEW STORMWATER MANAGEMENT FACILITIES CONSTRUCTION. CONTRACTOR SHALL COORDINATE WITH ALL APPLICABLE REGULATING AGENCIES CONCERNING INSTALLATION, INSPECTION AND APPROVAL OF THE STORM DRAINAGE SYSTEM CONSTRUCTION.
3. ALL STORMWATER MANAGEMENT FACILITIES, INCLUDING COLLECTION AND CONVEYANCE STRUCTURES SHALL BE INSTALLED IN ACCORDANCE WITH ALL APPLICABLE LOCAL AND STATE CODES AND REGULATIONS.
4. ANY WORK PERFORMED IN THE LOCAL OR STATE RIGHT OF WAYS SHALL BE IN ACCORDANCE WITH THE APPLICABLE LOCAL OR STATE REQUIREMENTS. IT SHALL BE THE CONTRACTOR'S RESPONSIBILITY TO OBTAIN THE NECESSARY PERMITS FOR THE WORK, SCHEDULE NECESSARY INSPECTIONS, AND PROVIDE THE NECESSARY TRAFFIC CONTROL MEASURES AND DEVICES, ETC., FOR WORK PERFORMED IN THE RIGHT OF WAYS.
5. STORM PIPE MATERIAL SHALL BE RCP OR HDPE DUAL WALL UNLESS NOTED OTHERWISE ON PLANS.

Structure Table				
Structure Name	RIM E.	INVERT IN	INVERT OUT	REMARKS
430	678.65	431 = 675.32 440 = 668.65	430 = 668.55	4'ø MANHOLE NEENAH R-3287-10V (CURB INLET)
431	681.44	432 = 678.35 410 = 675.66	431 = 675.56	4'ø MANHOLE NEENAH R-3472
432	681.53		432 = 678.44	Inlet Type A NEENAH R-4342
440	673.76	441 = 671.85 440A = 670.00	440 = 669.02	4'ø MANHOLE NEENAH R-3287-10V (CURB INLET)
440A	674.05		440A = 670.17	15IN-ADS Nyloplast Str.
441	675.37		441 = 672.00	15IN-ADS NYLOPLAST STR.
450	676.35	451 = 673.74	450 = 673.64	4'ø MANHOLE NEENAH R-3287-10V (CURB INLET)
451	676.98		451 = 674.00	4'ø MANHOLE NEENAH R-3287-10V (CURB INLET)

Pipe Table				
Pipe Name	Size (in)	Length (ft)	Slope	MATERIAL
101	12	164.1	1.16%	RCP
102	12	12.0	4.16%	RCP
111	15	94.9	0.68%	HDPE
201A	15	15.2	0.47%	HDPE
201	24	42.3	0.88%	RCP
202	18	15.4	0.88%	HDPE
202A	15	14.3	0.47%	HDPE
203	24	80.6	0.88%	HDPE
204B	8	91.2	3.50%	HDPE
204C	8	3.0	2.00%	HDPE
204A	12	99.3	0.35%	HDPE
204	24	127.3	0.88%	HDPE
205	24	51.1	0.88%	HDPE
206B	8	14.4	2.00%	HDPE
206C	8	3.0	2.00%	HDPE
206A	10	81.5	3.90%	HDPE
206	24	97.1	0.88%	HDPE
207B	8	62.4	2.00%	HDPE
207C	8	3.0	2.00%	HDPE
207	24	88.1	0.88%	HDPE
208D	8	41.9	1.00%	HDPE
208E	8	2.8	1.00%	HDPE
208B	8	36.7	1.00%	HDPE
208C	8	3.0	1.00%	HDPE
208A	12	117.3	1.01%	HDPE

Pipe Table				
Pipe Name	Size (in)	Length (ft)	Slope	MATERIAL
208	18	121.7	0.88%	HDPE
209A	12	90.5	0.30%	HDPE
209B	12	29.9	0.29%	HDPE
209	18	83.8	0.34%	HDPE
210	12	51.9	0.30%	HDPE
211	12	82.6	0.30%	HDPE
212	12	36.0	0.30%	HDPE
220	15	111.8	0.30%	RCP
221	12	111.1	0.30%	HDPE
222	12	82.5	0.30%	HDPE
230	15	114.5	0.35%	HDPE
231	15	35.8	0.35%	HDPE
231A	12	73.1	0.35%	HDPE
232	12	51.2	0.49%	HDPE
233	12	50.9	0.49%	HDPE
234	12	26.2	0.57%	HDPE
287	8	60.5	-0.50%	HDPE
301	15	114.5	1.49%	RCP
303	15	338.4	1.50%	HDPE
401A	15	19.5	0.46%	HDPE
401	24	49.6	0.50%	RCP
402	18	21.3	1.27%	HDPE
402A	15	21.0	0.43%	HDPE
403A	12	74.6	0.50%	HDPE
403	24	14.6	0.34%	HDPE

Pipe Table				
Pipe Name	Size (in)	Length (ft)	Slope	MATERIAL
404B	8	27.8	1.00%	HDPE
404C	8	3.0	1.00%	HDPE
404A	12	30.8	0.50%	HDPE
404	24	146.0	0.30%	HDPE
405A	12	38.2	0.40%	HDPE
405	18	43.0	0.46%	HDPE
406	18	120.5	0.46%	HDPE
406A	12	81.0	0.35%	HDPE
407	18	72.7	0.30%	HDPE
408	18	109.1	0.30%	HDPE
409	15	56.0	0.30%	HDPE
410A	12	26.5	0.38%	HDPE
410	12	204.4	0.35%	HDPE
420	12	75.7	0.30%	HDPE
425A	8	45.5	1.00%	HDPE
425B	8	3.0	1.00%	HDPE
425	15	163.8	0.33%	HDPE
426D	8	42.9	1.00%	HDPE
426C	8	3.0	1.00%	HDPE
426A	6	44.0	1.00%	HDPE
426B	6	3.0	1.00%	HDPE
426	12	31.8	1.02%	HDPE
430	18	118.6	0.25%	HDPE
431	12	68.3	0.35%	HDPE
432	12	26.8	0.35%	HDPE

Pipe Table				
Pipe Name	Size (in)	Length (ft)	Slope	MATERIAL
440A	12	55.8	0.31%	HDPE
440	15	123.7	0.30%	HDPE
441	12	39.9	0.36%	HDPE
450	12	67.2	0.30%	HDPE
451	12	88.3	0.30%	HDPE

Indiana 811
Know what's below. Call before you dig.

BCSC
TOGETHER WE LEARN

CSO
8831 Keystone Crossing, Indianapolis, IN 46240
317.848.7800 | csoinc.net

© 2018 CSO Architects, Inc. All Rights Reserved

Höweler+Yoon Architecture
617.517.4101 howeleryoon.com

CEC
Civil & Environmental Consultants, Inc.
530 E. Ohio Street · Suite G
Indianapolis, IN 46204
317-655-7777 · 877-746-0749
www.cecinc.com

PROJECT:
BARTHOLOMEW CONSOLIDATED SCHOOL CORPORATION
MAPLE GROVE ELEMENTARY SCHOOL

SCOPE DRAWINGS:
These drawings indicate the general scope of the project in terms of architectural design concept, the dimensions of the building, the major architectural elements and the type of structural, mechanical and electrical systems.
The drawings do not necessarily indicate or describe all work required for full performance and completion of the requirements of the Contract.
On the basis of the general scope indicated or described the trade contractors shall furnish all items required for the proper execution and completion of the work.

REVISIONS:
1 06/10/2025 - ADDENDUM #01
2 06/17/2025 - ADDENDUM #02

ISSUE DATE	DRAWN BY	CHECKED BY
05/30/25	BEB	JMP

DRAWING TITLE:
STORMWATER STRUCTURE PLAN

CERTIFIED BY:
JONATHAN M. PASYK REGISTERED No. PE12100829 STATE OF INDIANA PROFESSIONAL ENGINEER
05/30/2025

2 DRAWING NUMBER
C401

PROJECT NUMBER
2024022

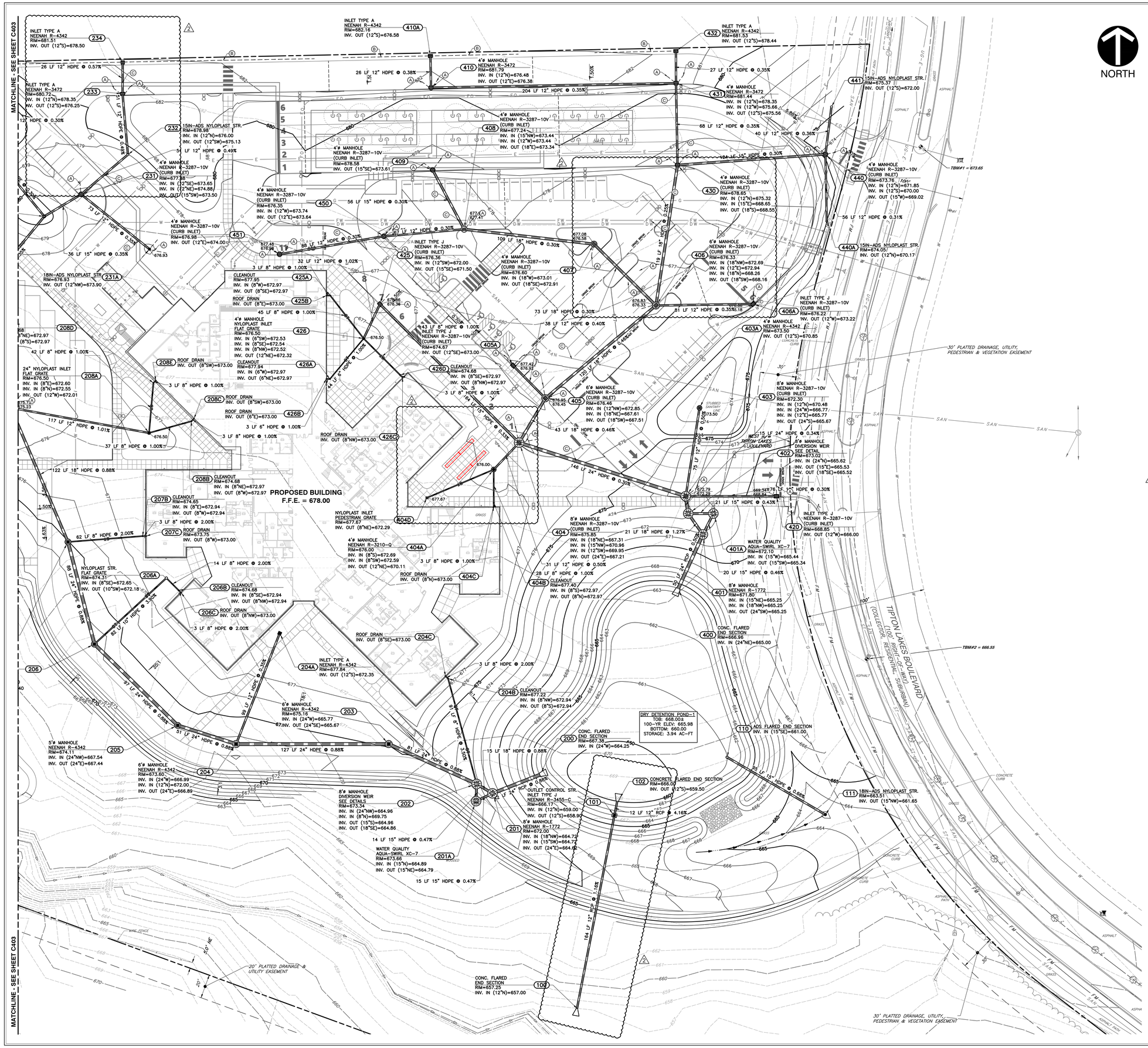

GENERAL DRAINAGE NOTES:

1. DISTANCES SHOWN ON PIPING ARE HORIZONTAL DISTANCES FROM CENTER OF STRUCTURE TO CENTER OF STRUCTURE, UNLESS OTHERWISE NOTED.
2. THE CONTRACTOR SHALL BE RESPONSIBLE FOR ALL COSTS ASSOCIATED WITH THE INSTALLATION, INSPECTION, TESTING AND FINAL ACCEPTANCE OF ALL NEW STORMWATER MANAGEMENT FACILITIES CONSTRUCTION. CONTRACTOR SHALL COORDINATE WITH ALL APPLICABLE REGULATING AGENCIES CONCERNING INSTALLATION, INSPECTION AND APPROVAL OF THE STORM DRAINAGE SYSTEM CONSTRUCTION.
3. ALL STORMWATER MANAGEMENT FACILITIES, INCLUDING COLLECTION AND CONVEYANCE STRUCTURES SHALL BE INSTALLED IN ACCORDANCE WITH ALL APPLICABLE LOCAL AND STATE CODES AND REGULATIONS.
4. ANY WORK PERFORMED IN THE LOCAL OR STATE RIGHT OF WAYS SHALL BE IN ACCORDANCE WITH THE APPLICABLE LOCAL OR STATE REQUIREMENTS. IT SHALL BE THE CONTRACTOR'S RESPONSIBILITY TO OBTAIN THE NECESSARY PERMITS FOR THE WORK, SCHEDULE NECESSARY INSPECTIONS, AND PROVIDE THE NECESSARY TRAFFIC CONTROL MEASURES AND DEVICES, ETC., FOR WORK PERFORMED IN THE RIGHT OF WAYS.
5. STORM PIPE MATERIAL SHALL BE RCP OR HDPE DUAL WALL UNLESS NOTED OTHERWISE ON PLANS.

FLOOD NOTE:

THE PARCEL DESCRIBED AND SHOWN HEREIN LIES WITHIN ZONE "X" (UN-SHADED) AS SAID PARCEL PLOTS ON MAP NUMBERS 18005C0110E AND 18005C0128E (DATED DECEMBER 9, 2014) OF THE FLOOD INSURANCE RATE MAPS FOR BARTHOLOMEW COUNTY, INDIANA. THE ACCURACY OF THIS FLOOD HAZARD STATEMENT IS SUBJECT TO MAP SCALE UNCERTAINTY AND TO ANY OTHER UNCERTAINTY IN LOCATION OR ELEVATION ON THE REFERENCED FLOOD INSURANCE RATE MAP.

BENCHMARKS:

UNLESS OTHERWISE NOTED, ELEVATIONS SHOWN HEREON ARE BASED UPON AN OPUS SOLUTION AND ARE ON THE 1988 NORTH AMERICAN VERTICAL DATUM (NAVD88 (GEOID 18)). IT IS MY OPINION THAT THE UNCERTAINTY IN THE ELEVATION OF THE PROJECT BENCHMARK DOES NOT EXCEED 0.10 FOOT.

TBM#1: SET MAG NAIL IN CONCRETE AT THE SOUTH END OF A MEDIAN LOCATED AT THE INTERSECTION OF TIPTON LAKES BLVD. AND WESTBROOK CT.
ELEV. = 673.65

TBM#2: SET MAG NAIL WEST SIDE OF MEDIAN 400'± SOUTH OF INTERSECTION OF TIPTON LAKES BLVD AND WESTBROOK COURT.
ELEV. = 666.55

TBM#3: SET MAG NAIL IN CONCRETE AT THE NORTH END OF A MEDIAN LOCATED AT THE INTERSECTION OF TIPTON LAKES BLVD AND SCARBOROUGH DR.
ELEV. = 655.56

DRAINAGE LEGEND:

800	PROPOSED INDEX CONTOUR
798	PROPOSED INTERMEDIATE CONTOUR
	PROPOSED DRAINAGE SWALE
	PROPOSED GRADE BREAK
	PROPOSED STORM SEWER LINE
	PROPOSED UNDERDRAIN
RD	PROPOSED ROOF DRAIN
	PROPOSED STORM MANHOLE, INLET
	PROPOSED BEEHIVE INLET SQUARE
	PROPOSED CURB INLET
	PROPOSED INLET (CIRCULAR)

KEY NOTES:

(A) TYPICAL 4" PARKING LOT PAVEMENT PERF. UNDERDRAIN; EXTEND 20 LF BEYOND STRUCTURE; CAP ENDS. SEE DETAIL ON SHEET C800.

(2) (B) 6" PERF. HDPE YARD UNDERDRAIN, BACKFILLED IN NO.8 WASHED STONE TRENCH. SEE DETAIL ON SHEET C803.

(C) PIPE CROSSING. SEE PROFILES FOR ELEVATION DETAIL. PROVIDE CONCRETE CRADLE FOR ANY CROSSING WITH LESS THAN 18" OF VERTICAL SEPARATION.

UTILITY NOTE:

THE UNDERGROUND UTILITIES SHOWN HAVE BEEN LOCATED FROM FIELD SURVEY INFORMATION AND EXISTING DRAWINGS. THE SURVEYOR MAKES NO GUARANTEES THAT THE UNDERGROUND UTILITIES COMPRISE ALL SUCH UTILITIES IN THE AREA, EITHER IN-SERVICE OR ABANDONED. THE SURVEYOR FURTHER DOES NOT WARRANT THAT THE UNDERGROUND UTILITIES SHOWN ARE IN THE EXACT LOCATION INDICATED ALTHOUGH THE SURVEYOR DOES CERTIFY THAT THEY ARE LOCATED AS ACCURATELY AS POSSIBLE FROM INFORMATION AVAILABLE. THE SURVEYOR HAS NOT PHYSICALLY LOCATED THE UNDERGROUND UTILITIES. INDIANA 811 ONE-CALL PUBLIC UTILITY LOCATE SERVICE TICKET NUMBERS 2405235264 AND 2405235311 WERE ISSUED FOR THIS SITE.

PRIOR TO ANY EXCAVATION FOR UNDERGROUND UTILITIES, THE CONTRACTOR SHALL EXPOSE AND VERIFY LOCATIONS (HORIZONTAL AND VERTICAL) OF ALL EXISTING UTILITIES INCLUDING BUT NOT LIMITED TO GAS, WATER, AND SANITARY SEWER. ANY CONFLICTS SHALL BE REPORTED IMMEDIATELY TO THE ENGINEER AND THE APPROPRIATE AUTHORITIES.

Indiana 811
Know what's below. Call before you dig.

BCSC
TOGETHER WE LEARN

CSO
8831 Keystone Crossing, Indianapolis, IN 46240
317.848.7800 | csoinc.net

© 2018 CSO Architects, Inc. All Rights Reserved

Höweler+Yoon Architecture
617.517.4101 howeleryoon.com

CEC
Civil & Environmental Consultants, Inc.
530 E. Ohio Street · Suite G
Indianapolis, IN 46204
317-655-7777 · 877-746-0749
www.cecinc.com

PROJECT:
BARTHOLOMEW CONSOLIDATED SCHOOL CORPORATION
MAPLE GROVE ELEMENTARY SCHOOL

SCOPE DRAWINGS:
These drawings are a part of the overall design of the project in terms of architectural design concept, the dimensions of the building, the major architectural elements and the type of structural, mechanical and electrical systems.
The drawings do not necessarily indicate or describe all materials and labor required for the completion of the requirements of the Contract.
On the basis of the general scope indicated or described, the trade contractors shall furnish all items required for the proper execution and completion of the work.

REVISIONS:
1 06/10/2025 - ADDENDUM #01
2 06/17/2025 - ADDENDUM #02

ISSUE DATE	DRAWN BY	CHECKED BY
05/30/25	BEB	JMP

DRAWING TITLE:
STORMWATER PLAN

CERTIFIED BY:
JONATHAN M. PASYK
REGISTERED
No. PE12100829
STATE OF INDIANA
PROFESSIONAL ENGINEER
05/30/2025

DRAWING NUMBER
C402

PROJECT NUMBER
2024022

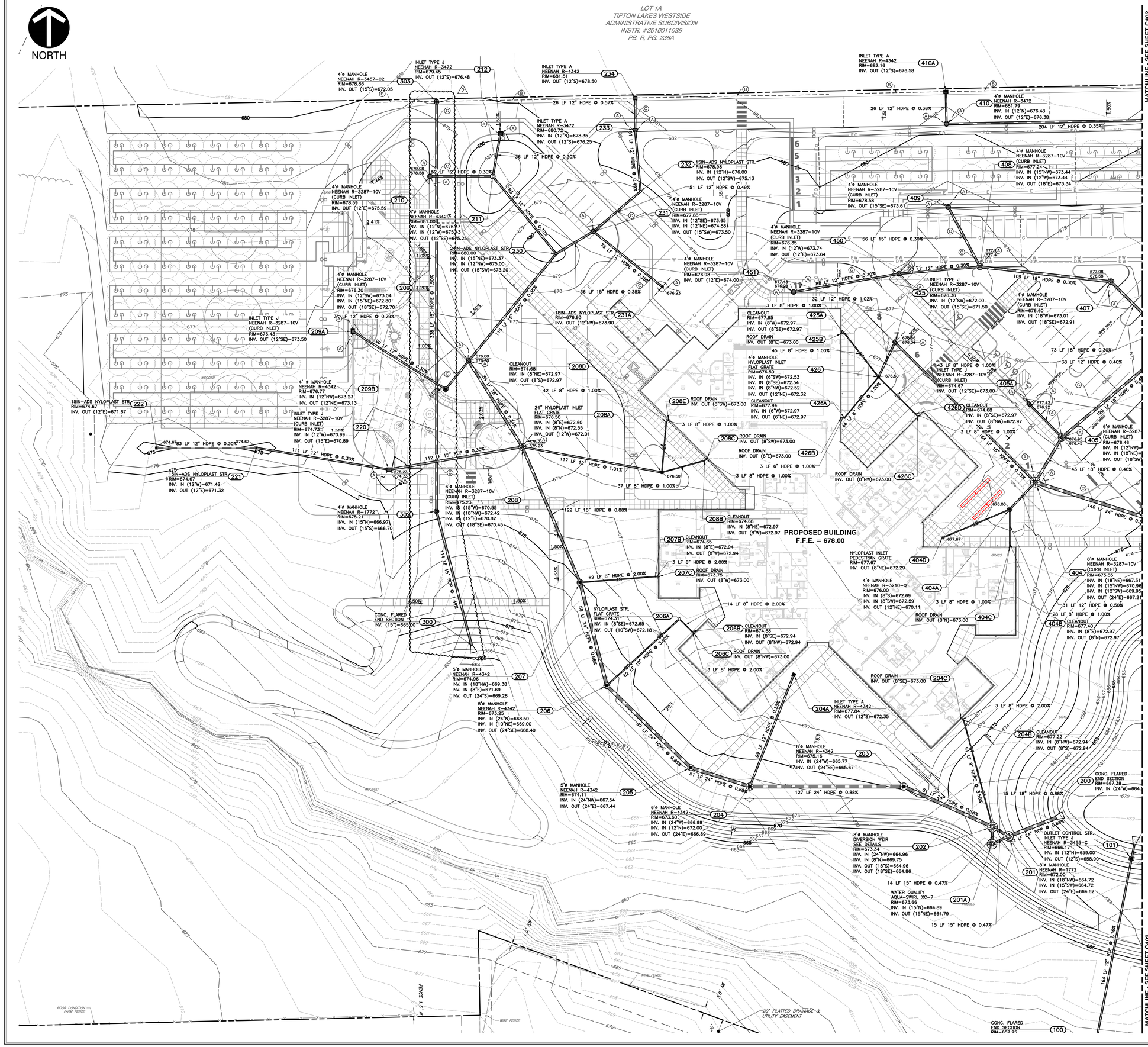

GENERAL DRAINAGE NOTES:

1. DISTANCES SHOWN ON PIPING ARE HORIZONTAL DISTANCES FROM CENTER OF STRUCTURE TO CENTER OF STRUCTURE, UNLESS OTHERWISE NOTED.
2. THE CONTRACTOR SHALL BE RESPONSIBLE FOR ALL COSTS ASSOCIATED WITH THE INSTALLATION, INSPECTION, TESTING AND FINAL ACCEPTANCE OF ALL NEW STORMWATER MANAGEMENT FACILITIES CONSTRUCTION. CONTRACTOR SHALL COORDINATE WITH ALL APPLICABLE REGULATING AGENCIES CONCERNING INSTALLATION, INSPECTION AND APPROVAL OF THE STORM DRAINAGE SYSTEM CONSTRUCTION.
3. ALL STORMWATER MANAGEMENT FACILITIES, INCLUDING COLLECTION AND CONVEYANCE STRUCTURES SHALL BE INSTALLED IN ACCORDANCE WITH ALL APPLICABLE LOCAL AND STATE CODES AND REGULATIONS.
4. ANY WORK PERFORMED IN THE LOCAL OR STATE RIGHT OF WAYS SHALL BE IN ACCORDANCE WITH THE APPLICABLE LOCAL OR STATE REQUIREMENTS. IT SHALL BE THE CONTRACTOR'S RESPONSIBILITY TO OBTAIN THE NECESSARY PERMITS FOR THE WORK, SCHEDULE NECESSARY INSPECTIONS, AND PROVIDE THE NECESSARY TRAFFIC CONTROL MEASURES AND DEVICES, ETC., FOR WORK PERFORMED IN THE RIGHT OF WAYS.
5. STORM PIPE MATERIAL SHALL BE RCP OR HDPE DUAL WALL UNLESS NOTED OTHERWISE ON PLANS.

FLOOD NOTE:

THE PARCEL DESCRIBED AND SHOWN HEREIN LIES WITHIN ZONE "X" (UN-SHADED) AS SAID PARCEL PLOTS ON MAP NUMBERS 18005C0110E AND 18005C0128E (DATED DECEMBER 9, 2014) OF THE FLOOD INSURANCE RATE MAPS FOR BARTHOLOMEW COUNTY, INDIANA. THE ACCURACY OF THIS FLOOD HAZARD STATEMENT IS SUBJECT TO MAP SCALE UNCERTAINTY AND TO ANY OTHER UNCERTAINTY IN LOCATION OR ELEVATION ON THE REFERENCED FLOOD INSURANCE RATE MAP.

BENCHMARKS:

UNLESS OTHERWISE NOTED, ELEVATIONS SHOWN HEREON ARE BASED UPON AN OPUS SOLUTION AND ARE ON THE 1988 NORTH AMERICAN VERTICAL DATUM (NAVD88 (GEOID 18)). IT IS MY OPINION THAT THE UNCERTAINTY IN THE ELEVATION OF THE PROJECT BENCHMARK DOES NOT EXCEED 0.10 FOOT.

TBM#1: SET MAG NAIL IN CONCRETE AT THE SOUTH END OF A MEDIAN LOCATED AT THE INTERSECTION OF TIPTON LAKES BLVD. AND WESTBROOK CT.
ELEV. = 673.65

TBM#2: SET MAG NAIL WEST SIDE OF MEDIAN 400'± SOUTH OF INTERSECTION OF TIPTON LAKES BLVD AND WESTBROOK COURT.
ELEV. = 666.55

TBM#3: SET MAG NAIL IN CONCRETE AT THE NORTH END OF A MEDIAN LOCATED AT THE INTERSECTION OF TIPTON LAKES BLVD AND SCARBOROUGH DR.
ELEV. = 655.56

DRAINAGE LEGEND:

- 800 — PROPOSED INDEX CONTOUR
- 798 — PROPOSED INTERMEDIATE CONTOUR
- PROPOSED DRAINAGE SWALE
- PROPOSED GRADE BREAK
- PROPOSED STORM SEWER LINE
- PROPOSED UNDERDRAIN
- RD — PROPOSED ROOF DRAIN
- PROPOSED STORM MANHOLE, INLET
- PROPOSED BEEHIVE INLET SQUARE
- PROPOSED CURB INLET
- PROPOSED INLET (CIRCULAR)

KEY NOTES:

- (A) TYPICAL 4" PARKING LOT PAVEMENT PERF. UNDERDRAIN; EXTEND 20 LF BEYOND STRUCTURE; CAP ENDS. SEE DETAIL ON SHEET C800.
- (B) 6" PERF. HDPE YARD UNDERDRAIN, BACKFILLED IN NO.8 WASHED STONE TRENCH. SEE DETAIL ON SHEET C803.
- (C) PIPE CROSSING. SEE PROFILES FOR ELEVATION DETAIL. PROVIDE CONCRETE CRADLE FOR ANY CROSSING WITH LESS THAN 18" OF VERTICAL SEPARATION.

UTILITY NOTE:

THE UNDERGROUND UTILITIES SHOWN HAVE BEEN LOCATED FROM FIELD SURVEY INFORMATION AND EXISTING DRAWINGS. THE SURVEYOR MAKES NO GUARANTEES THAT THE UNDERGROUND UTILITIES COMPRISE ALL SUCH UTILITIES IN THE AREA, EITHER IN-SERVICE OR ABANDONED. THE SURVEYOR FURTHER DOES NOT WARRANT THAT THE UNDERGROUND UTILITIES SHOWN ARE IN THE EXACT LOCATION INDICATED ALTHOUGH THE SURVEYOR DOES CERTIFY THAT THEY ARE LOCATED AS ACCURATELY AS POSSIBLE FROM INFORMATION AVAILABLE. THE SURVEYOR HAS NOT PHYSICALLY LOCATED THE UNDERGROUND UTILITIES. INDIANA 811 ONE-CALL PUBLIC UTILITY LOCATE SERVICE TICKET NUMBERS 2405235264 AND 2405235311 WERE ISSUED FOR THIS SITE.

PRIOR TO ANY EXCAVATION FOR UNDERGROUND UTILITIES, THE CONTRACTOR SHALL EXPOSE AND VERIFY LOCATIONS (HORIZONTAL AND VERTICAL) OF ALL EXISTING UTILITIES INCLUDING BUT NOT LIMITED TO GAS, WATER, AND SANITARY SEWER. ANY CONFLICTS SHALL BE REPORTED IMMEDIATELY TO THE ENGINEER AND THE APPROPRIATE AUTHORITIES.

SCALE IN FEET
0 30 60

Indiana 811
Know what's below. Call before you dig.

BCSC TOGETHER WE LEARN

CSO
8831 Keystone Crossing, Indianapolis, IN 46240
317.848.7800 | csoinc.net

© 2018 CSO Architects, Inc. All Rights Reserved

Höweler+Yoon Architecture
617.517.4101 hweleryoon.com

Civil & Environmental Consultants, Inc.
530 E. Ohio Street · Suite G
Indianapolis, IN 46204
317-655-7777 · 877-746-0749
www.ceciinc.com

PROJECT:
BARTHOLOMEW CONSOLIDATED SCHOOL CORPORATION
MAPLE GROVE ELEMENTARY SCHOOL

SCOPE DRAWINGS:
These drawings indicate the general scope of the project in terms of architectural design concept, the dimensions of the building, the major architectural elements and the type of construction and mechanical systems to be used.
The drawings do not necessarily indicate or describe all work required for full performance and completion of the requirements of the Contract.
On the basis of the general scope indicated or described, the trade contractors shall furnish all items required for the proper execution and completion of the work.

REVISIONS:
1 06/10/2025 - ADDENDUM #01
2 06/17/2025 - ADDENDUM #02

ISSUE DATE	DRAWN BY	CHECKED BY
05/30/25	BEB	JMP

DRAWING TITLE:
STORMWATER PLAN

CERTIFIED BY:
JONATHAN M. PASLAY
REGISTERED
No. PE12100829
STATE OF INDIANA
PROFESSIONAL ENGINEER
05/30/2025

DRAWING NUMBER
C403

PROJECT NUMBER
2024022

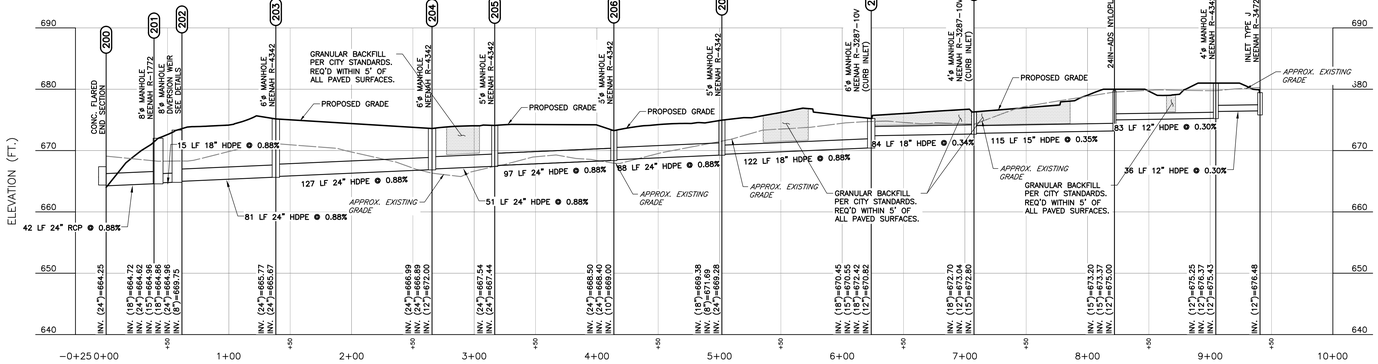

STR200-212 PROFILE
SCALE H:1"=50'; V:1"=10'

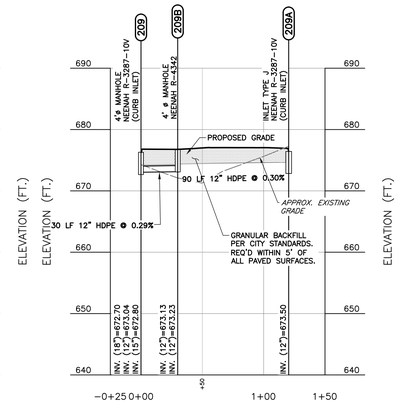

STR209-209A PROFILE
SCALE H:1"=50'; V:1"=10'

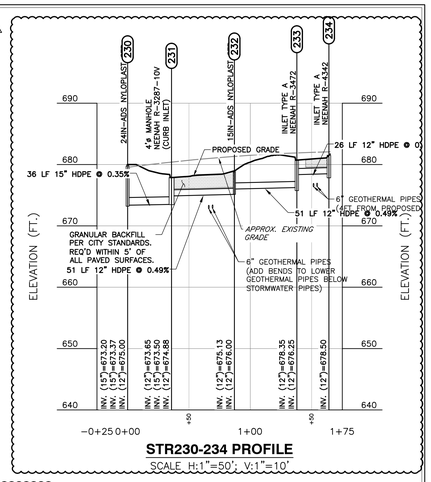

STR230-234 PROFILE
SCALE H:1"=50'; V:1"=10'

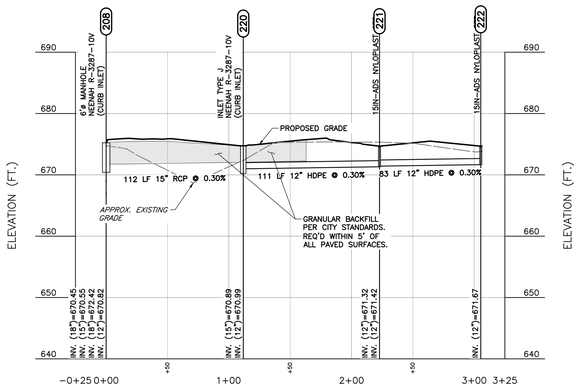

STR208-222 PROFILE
SCALE H:1"=50'; V:1"=10'

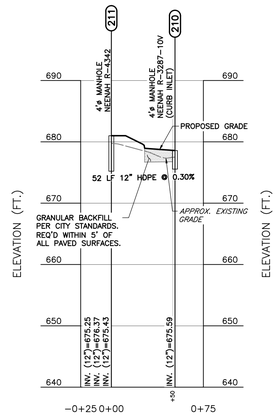

STR210-211 PROFILE
SCALE H:1"=50'; V:1"=10'

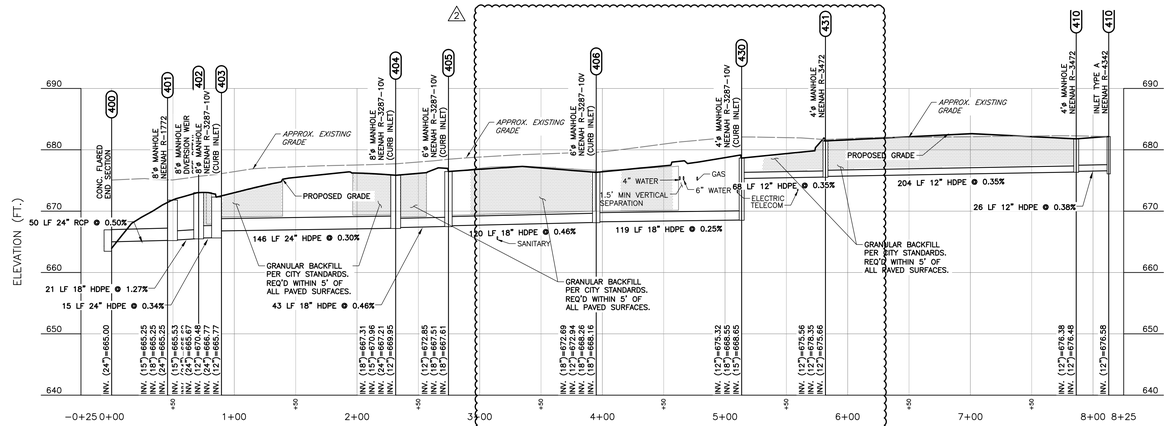

STR400-410A PROFILE
SCALE H:1"=50'; V:1"=10'

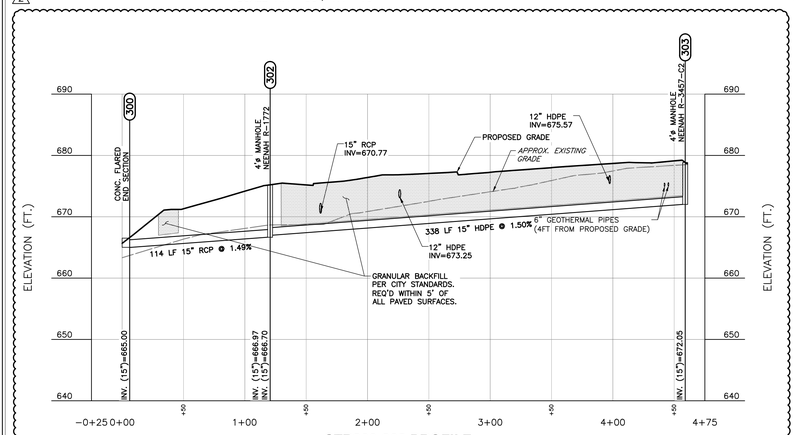

STR300-303 PROFILE
SCALE H:1"=50'; V:1"=10'

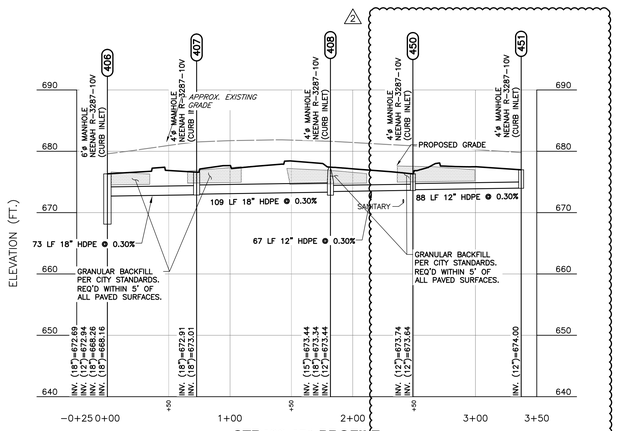

STR406-451 PROFILE
SCALE H:1"=50'; V:1"=10'

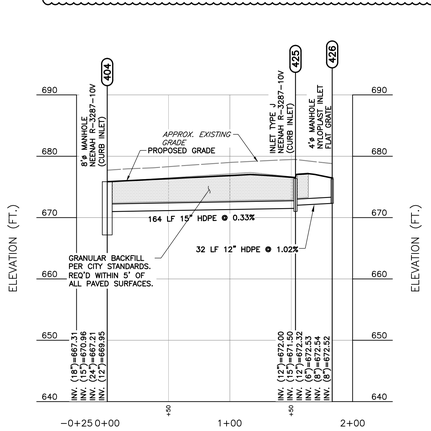

STR404-426 PROFILE
SCALE H:1"=50'; V:1"=10'

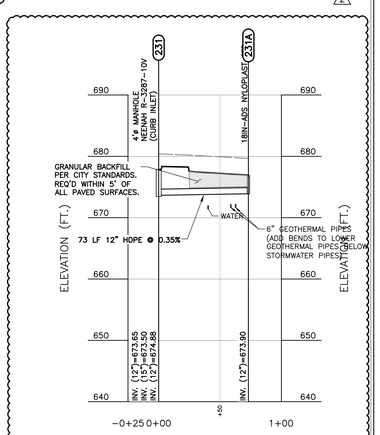

STR231-231A PROFILE
SCALE H:1"=50'; V:1"=10'

SCALE IN FEET
0 50 100

Indiana 811
Know what's below. Call before you dig.

BCSC
TOGETHER WE LEARN

CSO
8831 Keystone Crossing, Indianapolis, IN 46240
317.848.7800 | csoinc.net

© 2018 CSO Architects, Inc. All Rights Reserved

Höweler+Yoon Architecture
617.517.4101 howeleryoon.com

Civil & Environmental Consultants, Inc.
530 E. Ohio Street · Suite G
Indianapolis, IN 46204
317-655-7777 · 877-746-0749
www.ceciinc.com

PROJECT:
BARTHOLOMEW CONSOLIDATED SCHOOL CORPORATION
MAPLE GROVE ELEMENTARY SCHOOL

SCOPE DRAWINGS:
These drawings indicate the general scope of the project. The drawings do not necessarily indicate or describe all work in the building, the major architectural elements and the type of structural, mechanical and electrical systems.
The drawings do not necessarily indicate or describe all work required for full performance and completion of the building and site improvements.
On the basis of the general scope indicated or described, the trade contractors shall furnish all items required for the proper execution and completion of the work.

REVISIONS:
2 06/17/2025 - ADDENDUM #02

ISSUE DATE	DRAWN BY	CHECKED BY
05/30/25	BEB	JMP

DRAWING TITLE:
STORMWATER PROFILES

CERTIFIED BY:
JONATHAN M. PASCH
REGISTERED
No. PE12100829
STATE OF
INDIANA
PROFESSIONAL ENGINEER
05/30/2025

DRAWING NUMBER
C404

PROJECT NUMBER
2024022

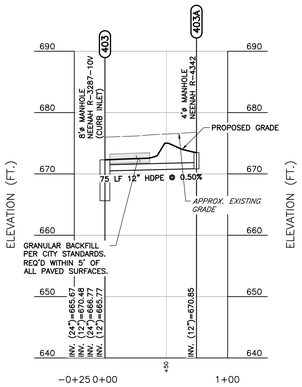

STR403-403A PROFILE
SCALE H:1"=50'; V:1"=10'

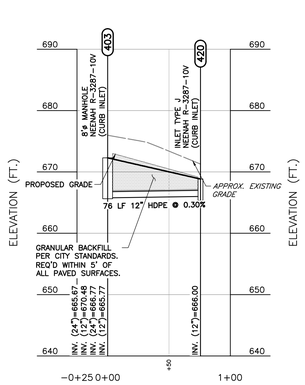

STR403-420 PROFILE
SCALE H:1"=50'; V:1"=10'

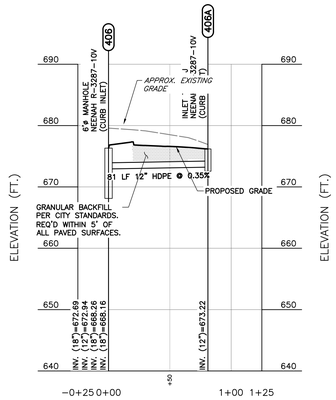

STR406-406A PROFILE
SCALE H:1"=50'; V:1"=10'

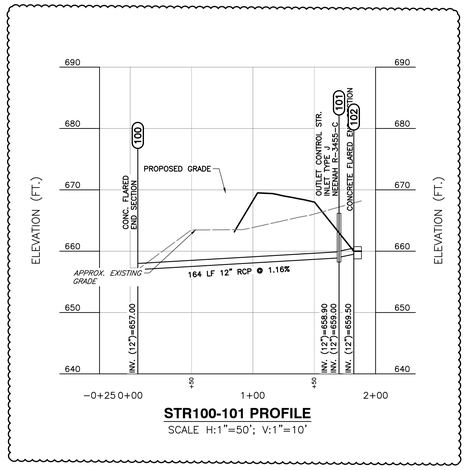

STR100-101 PROFILE
SCALE H:1"=50'; V:1"=10'

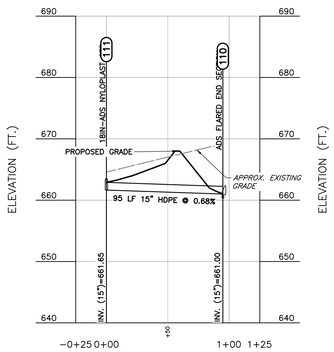

STR110-111 PROFILE
SCALE H:1"=50'; V:1"=10'

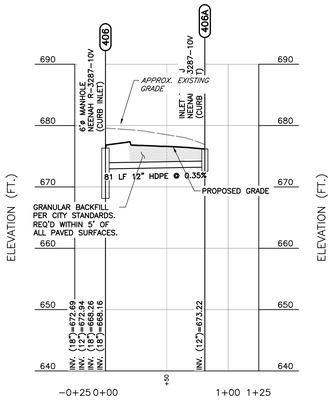

STR406-406A PROFILE
SCALE H:1"=50'; V:1"=10'

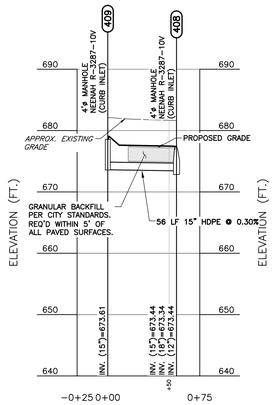

STR408-409 PROFILE
SCALE H:1"=50'; V:1"=10'

SCALE IN FEET
0 50 100

Indiana 811
Know what's below. Call before you dig.

BCSC TOGETHER WE LEARN

CSO
8831 Keystone Crossing, Indianapolis, IN 46240
317.848.7800 | csoinc.net

© 2018 CSO Architects, Inc. All Rights Reserved

Höweler+Yoon Architecture
617.517.4101 howeleryoon.com

Civil & Environmental Consultants, Inc.
530 E. Ohio Street · Suite G
Indianapolis, IN 46204
317-655-7777 · 877-746-0749
www.ceciinc.com

PROJECT:
BARTHOLOMEW CONSOLIDATED SCHOOL CORPORATION
MAPLE GROVE ELEMENTARY SCHOOL

SCOPE DRAWINGS:
These drawings indicate the general scope of the project in terms of architectural design concept, the dimensions of the building, the major architectural elements and the type of construction and building materials to be used.
The drawings do not necessarily indicate or describe all work required for full performance and completion of the requirements of the Contract.
On the basis of the general scope indicated or described, the bidder is required to furnish all items required for the proper execution and completion of the work.

REVISIONS:
2 06/17/2025 - ADDENDUM #02

ISSUE DATE	DRAWN BY	CHECKED BY
05/30/25	BEB	JMP

DRAWING TITLE:
STORMWATER PROFILES

CERTIFIED BY:
JONATHAN M. PASLAY
REGISTERED
No. PE12100829
STATE OF INDIANA
PROFESSIONAL ENGINEER
05/30/2025

DRAWING NUMBER
C405

PROJECT NUMBER
2024022

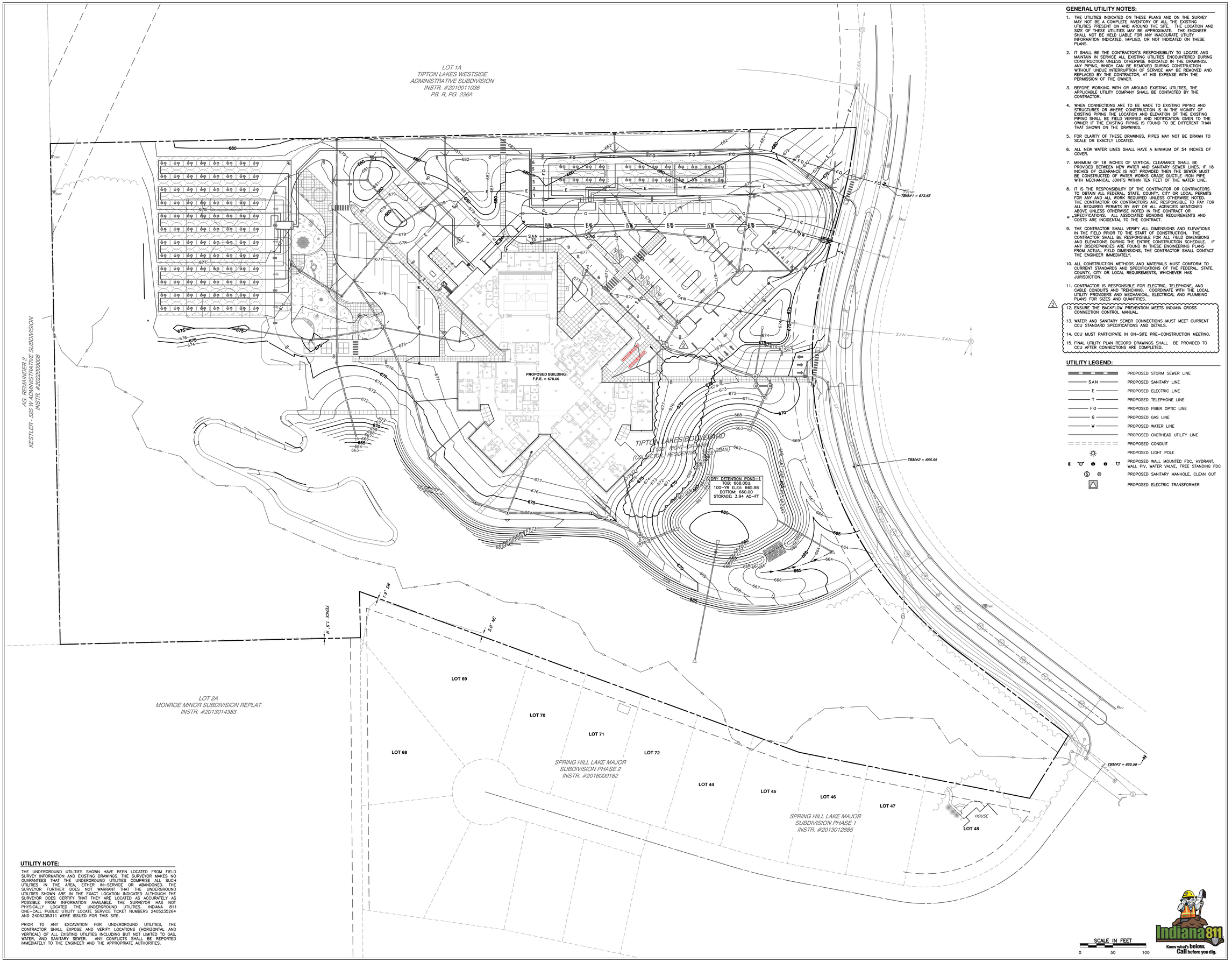

GENERAL UTILITY NOTES:

1. THE UTILITIES INDICATED ON THESE PLANS AND ON THE SURVEY MAY NOT BE A COMPLETE INVENTORY OF ALL THE EXISTING UTILITIES PRESENT ON AND AROUND THE SITE. THE LOCATION AND SIZE OF THESE UTILITIES MAY BE APPROXIMATE. THE ENGINEER SHALL NOT BE HELD LIABLE FOR ANY INACCURATE UTILITY INFORMATION INDICATED, IMPLIED, OR NOT INDICATED ON THESE PLANS.

2. IT SHALL BE THE CONTRACTOR'S RESPONSIBILITY TO LOCATE AND MAINTAIN IN SERVICE ALL EXISTING UTILITIES ENCOUNTERED DURING CONSTRUCTION UNLESS OTHERWISE INDICATED IN THE DRAWINGS. ANY PIPING, WHICH CAN BE REMOVED DURING CONSTRUCTION WITHOUT UNDUE INTERRUPTION OF SERVICE MAY BE REMOVED AND REPLACED BY THE CONTRACTOR, AT HIS EXPENSE WITH THE PERMISSION OF THE OWNER.

3. BEFORE WORKING WITH OR AROUND EXISTING UTILITIES, THE APPLICABLE UTILITY COMPANY SHALL BE CONTACTED BY THE CONTRACTOR.

4. WHEN CONNECTIONS ARE TO BE MADE TO EXISTING PIPING AND STRUCTURES OR WHERE CONSTRUCTION IS IN THE VICINITY OF EXISTING PIPING THE LOCATION AND ELEVATION OF THE EXISTING PIPING SHALL BE FIELD VERIFIED AND NOTIFICATION GIVEN TO THE OWNER IF THE EXISTING PIPING IS FOUND TO BE DIFFERENT THAN THAT SHOWN ON THE DRAWINGS.

5. FOR CLARITY OF THESE DRAWINGS, PIPES MAY NOT BE DRAWN TO SCALE OR EXACTLY LOCATED.

6. ALL NEW WATER LINES SHALL HAVE A MINIMUM OF 54 INCHES OF COVER.

7. MINIMUM OF 18 INCHES OF VERTICAL CLEARANCE SHALL BE PROVIDED BETWEEN NEW WATER AND SANITARY SEWER LINES. IF 18 INCHES OF CLEARANCE IS NOT PROVIDED THEN THE SEWER MUST BE CONSTRUCTED OF WATER WORKS GRADE DUCTILE IRON PIPE WITH MECHANICAL JOINTS WITHIN TEN FEET OF THE WATER LINE.

8. IT IS THE RESPONSIBILITY OF THE CONTRACTOR OR CONTRACTORS TO OBTAIN ALL FEDERAL, STATE, COUNTY, CITY OR LOCAL PERMITS FOR ANY AND ALL WORK REQUIRED UNLESS OTHERWISE NOTED. THE CONTRACTOR OR CONTRACTORS ARE RESPONSIBLE TO PAY FOR ALL REQUIRED PERMITS BY ANY OR ALL AGENCIES MENTIONED ABOVE UNLESS OTHERWISE NOTED IN THE CONTRACT OR SPECIFICATIONS. ALL ASSOCIATED BONDING REQUIREMENTS AND COSTS ARE INCIDENTAL TO THE CONTRACT.

9. THE CONTRACTOR SHALL VERIFY ALL DIMENSIONS AND ELEVATIONS IN THE FIELD PRIOR TO THE START OF CONSTRUCTION. THE CONTRACTOR SHALL BE RESPONSIBLE FOR ALL FIELD DIMENSIONS AND ELEVATIONS DURING THE ENTIRE CONSTRUCTION SCHEDULE. IF ANY DISCREPANCIES ARE FOUND IN THESE ENGINEERING PLANS FROM ACTUAL FIELD DIMENSIONS, THE CONTRACTOR SHALL CONTACT THE ENGINEER IMMEDIATELY.

10. ALL CONSTRUCTION METHODS AND MATERIALS MUST CONFORM TO CURRENT STANDARDS AND SPECIFICATIONS OF THE FEDERAL, STATE, COUNTY, CITY OR LOCAL REQUIREMENTS, WHICHEVER HAS JURISDICTION.

11. CONTRACTOR IS RESPONSIBLE FOR ELECTRIC, TELEPHONE, AND CABLE CONDUITS AND TRENCHING. COORDINATE WITH THE LOCAL UTILITY PROVIDERS AND MECHANICAL, ELECTRICAL AND PLUMBING PLANS FOR SIZES AND QUANTITIES.

2 12. ENSURE THE BACKFLOW PREVENTION MEETS INDIANA CROSS CONNECTION CONTROL MANUAL.

13. WATER AND SANITARY SEWER CONNECTIONS MUST MEET CURRENT CCU STANDARD SPECIFICATIONS AND DETAILS.

14. CCU MUST PARTICIPATE IN ON-SITE PRE-CONSTRUCTION MEETING.

15. FINAL UTILITY PLAN RECORD DRAWINGS SHALL BE PROVIDED TO CCU AFTER CONNECTIONS ARE COMPLETED.

UTILITY LEGEND:

- PROPOSED STORM SEWER LINE
- SAN — PROPOSED SANITARY LINE
- E — PROPOSED ELECTRIC LINE
- T — PROPOSED TELEPHONE LINE
- FO — PROPOSED FIBER OPTIC LINE
- G — PROPOSED GAS LINE
- W — PROPOSED WATER LINE
- PROPOSED OVERHEAD UTILITY LINE
- PROPOSED CONDUIT
- PROPOSED LIGHT POLE
- PROPOSED WALL MOUNTED FDC, HYDRANT, WALL PIV, WATER VALVE, FREE STANDING FDC
- PROPOSED SANITARY MANHOLE, CLEAN OUT
- PROPOSED ELECTRIC TRANSFORMER

UTILITY NOTE:

THE UNDERGROUND UTILITIES SHOWN HAVE BEEN LOCATED FROM FIELD SURVEY INFORMATION AND EXISTING DRAWINGS. THE SURVEYOR MAKES NO GUARANTEES THAT THE UNDERGROUND UTILITIES COMPRISE ALL SUCH UTILITIES IN THE AREA, EITHER IN-SERVICE OR ABANDONED. THE SURVEYOR FURTHER DOES NOT WARRANT THAT THE UNDERGROUND UTILITIES SHOWN ARE IN THE EXACT LOCATION INDICATED ALTHOUGH THE SURVEYOR DOES CERTIFY THAT THEY ARE LOCATED AS ACCURATELY AS POSSIBLE FROM INFORMATION AVAILABLE. THE SURVEYOR HAS NOT PHYSICALLY LOCATED THE UNDERGROUND UTILITIES. INDIANA 811 ONE-CALL PUBLIC UTILITY LOCATE SERVICE TICKET NUMBERS 2405235264 AND 2405235311 WERE ISSUED FOR THIS SITE.

PRIOR TO ANY EXCAVATION FOR UNDERGROUND UTILITIES, THE CONTRACTOR SHALL EXPOSE AND VERIFY LOCATIONS (HORIZONTAL AND VERTICAL) OF ALL EXISTING UTILITIES INCLUDING BUT NOT LIMITED TO GAS, WATER, AND SANITARY SEWER. ANY CONFLICTS SHALL BE REPORTED IMMEDIATELY TO THE ENGINEER AND THE APPROPRIATE AUTHORITIES.

Indiana 811
Know what's below. Call before you dig.

BCSC
TOGETHER WE LEARN

CSO
8831 Keystone Crossing, Indianapolis, IN 46240
317.848.7800 | csoinc.net
© 2018 CSO Architects, Inc. All Rights Reserved

Höweler+Yoon Architecture
617.517.4101 howeleryoon.com

Civil & Environmental Consultants, Inc.
530 E. Ohio Street · Suite G
Indianapolis, IN 46204
317-655-7777 · 877-746-0749
www.ceiinc.com

PROJECT:
BARTHOLOMEW CONSOLIDATED SCHOOL CORPORATION
MAPLE GROVE ELEMENTARY SCHOOL

SCOPE DRAWINGS:
These drawings indicate the general scope of the project in terms of architectural and structural design, dimensions of building, the major architectural elements and the type of structural, mechanical and electrical systems.
The drawings do not necessarily indicate or describe all work required for full performance and completion of the contracted work. The work.
On the basis of the general scope indicated or described, the trade contractors shall furnish all items required for the proper execution and completion of the work.

REVISIONS:
2 06/17/2025 - ADDENDUM #02

ISSUE DATE	DRAWN BY	CHECKED BY
05/30/25	BEB	JMP

DRAWING TITLE:
OVERALL UTILITY PLAN

CERTIFIED BY:
JONATHAN M. PASYK
REGISTERED
No. PE12100829
STATE OF INDIANA
PROFESSIONAL ENGINEER
05/30/2025

DRAWING NUMBER
C500

PROJECT NUMBER
2024022

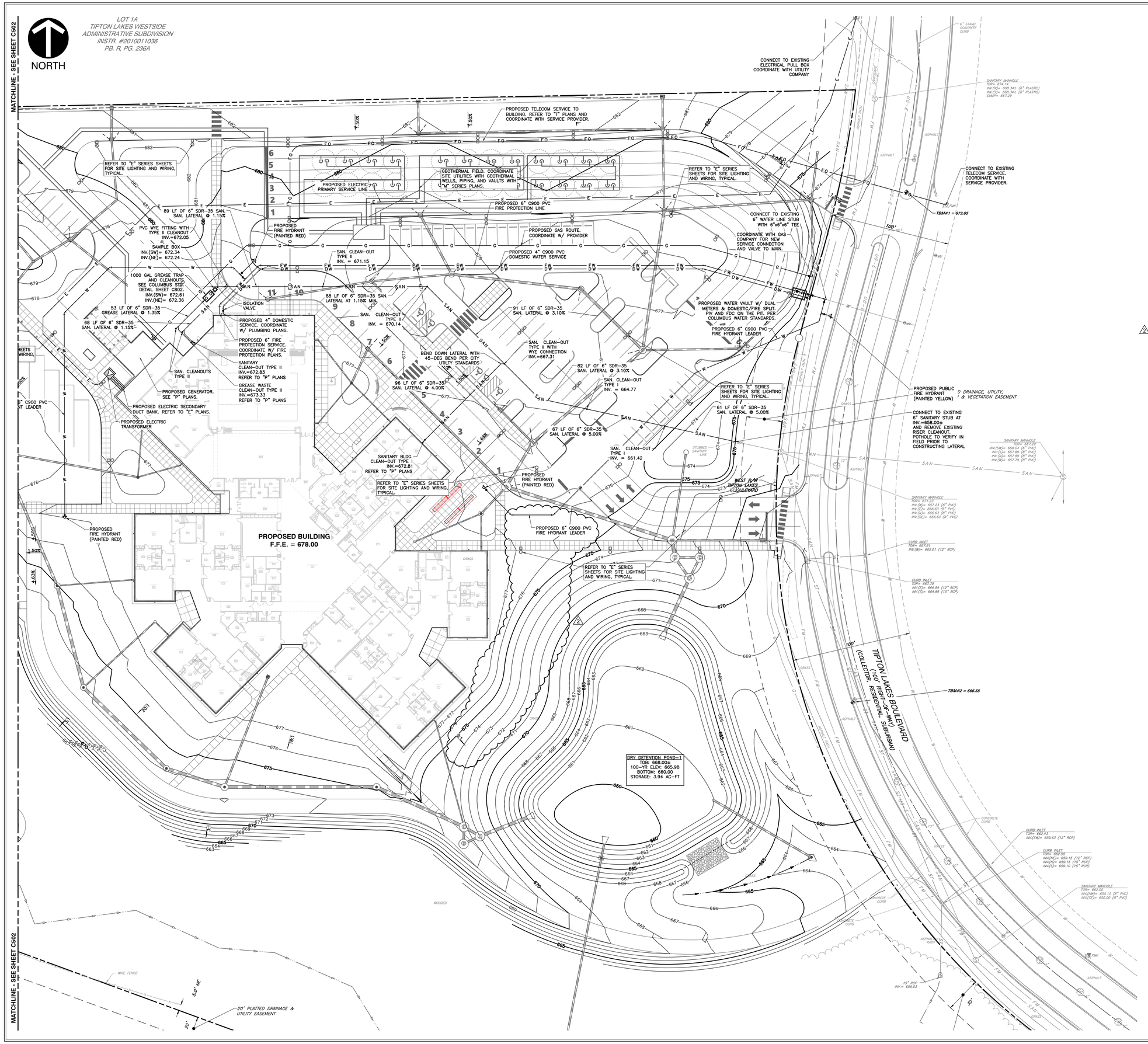

GENERAL UTILITY NOTES:

1. THE UTILITIES INDICATED ON THESE PLANS AND ON THE SURVEY MAY NOT BE A COMPLETE INVENTORY OF ALL THE EXISTING UTILITIES PRESENT ON AND AROUND THE SITE. THE LOCATION AND SIZE OF THESE UTILITIES MAY BE APPROXIMATE. THE ENGINEER SHALL NOT BE HELD LIABLE FOR ANY INACCURATE UTILITY INFORMATION INDICATED, IMPLIED, OR NOT INDICATED ON THESE PLANS.
2. IT SHALL BE THE CONTRACTOR'S RESPONSIBILITY TO LOCATE AND MAINTAIN IN SERVICE ALL EXISTING UTILITIES ENCOUNTERED DURING CONSTRUCTION UNLESS OTHERWISE INDICATED IN THE DRAWINGS. ANY PIPING, WHICH CAN BE REMOVED DURING CONSTRUCTION WITHOUT UNDUE INTERRUPTION OF SERVICE MAY BE REMOVED AND REPLACED BY THE CONTRACTOR, AT HIS EXPENSE WITH THE PERMISSION OF THE OWNER.
3. BEFORE WORKING WITH OR AROUND EXISTING UTILITIES, THE APPLICABLE UTILITY COMPANY SHALL BE CONTACTED BY THE CONTRACTOR.
4. WHEN CONNECTIONS ARE TO BE MADE TO EXISTING PIPING AND STRUCTURES OR WHERE CONSTRUCTION IS IN THE VICINITY OF EXISTING PIPING THE LOCATION AND ELEVATION OF THE EXISTING PIPING SHALL BE FIELD VERIFIED AND NOTIFICATION GIVEN TO THE OWNER IF THE EXISTING PIPING IS FOUND TO BE DIFFERENT THAN THAT SHOWN ON THE DRAWINGS.
5. FOR CLARITY OF THESE DRAWINGS, PIPES MAY NOT BE DRAWN TO SCALE OR EXACTLY LOCATED.
6. ALL NEW WATER LINES SHALL HAVE A MINIMUM OF 54 INCHES OF COVER.
7. MINIMUM OF 18 INCHES OF VERTICAL CLEARANCE SHALL BE PROVIDED BETWEEN NEW WATER AND SANITARY SEWER LINES. IF 18 INCHES OF CLEARANCE IS NOT PROVIDED THEN THE SEWER MUST BE CONSTRUCTED OF WATER WORKS GRADE DUCTILE IRON PIPE WITH MECHANICAL JOINTS WITHIN TEN FEET OF THE WATER LINE.
8. IT IS THE RESPONSIBILITY OF THE CONTRACTOR OR CONTRACTORS TO OBTAIN ALL FEDERAL, STATE, COUNTY, CITY OR LOCAL PERMITS FOR ANY AND ALL WORK REQUIRED UNLESS OTHERWISE NOTED. THE CONTRACTOR OR CONTRACTORS ARE RESPONSIBLE TO PAY FOR ALL REQUIRED PERMITS BY ANY OR ALL AGENCIES MENTIONED ABOVE UNLESS OTHERWISE NOTED IN THE CONTRACT OR SPECIFICATIONS. ALL ASSOCIATED BONDING REQUIREMENTS AND COSTS ARE INCIDENTAL TO THE CONTRACT.
9. THE CONTRACTOR SHALL VERIFY ALL DIMENSIONS AND ELEVATIONS IN THE FIELD PRIOR TO THE START OF CONSTRUCTION. THE CONTRACTOR SHALL BE RESPONSIBLE FOR ALL FIELD DIMENSIONS AND ELEVATIONS DURING THE ENTIRE CONSTRUCTION SCHEDULE. IF ANY DISCREPANCIES ARE FOUND IN THESE ENGINEERING PLANS FROM ACTUAL FIELD DIMENSIONS, THE CONTRACTOR SHALL CONTACT THE ENGINEER IMMEDIATELY.
10. ALL CONSTRUCTION METHODS AND MATERIALS MUST CONFORM TO CURRENT STANDARDS AND SPECIFICATIONS OF THE FEDERAL, STATE, COUNTY, CITY OR LOCAL REQUIREMENTS, WHICHEVER HAS JURISDICTION.
11. CONTRACTOR IS RESPONSIBLE FOR ELECTRIC, TELEPHONE, AND CABLE CONDUITS AND TRENCHING. COORDINATE WITH THE LOCAL UTILITY PROVIDERS AND MECHANICAL, ELECTRICAL AND PLUMBING PLANS FOR SIZES AND QUANTITIES.
12. ENSURE THE BACKFLOW PREVENTION MEETS INDIANA CROSS CONNECTION CONTROL MANUAL. (2)
13. WATER AND SANITARY SEWER CONNECTIONS MUST MEET CURRENT CCU STANDARD SPECIFICATIONS AND DETAILS.
14. CCU MUST PARTICIPATE IN ON-SITE PRE-CONSTRUCTION MEETING.
15. FINAL UTILITY PLAN RECORD DRAWINGS SHALL BE PROVIDED TO CCU AFTER CONNECTIONS ARE COMPLETED.

UTILITY LEGEND:

- PROPOSED STORM SEWER LINE
- SAN — PROPOSED SANITARY LINE
- E — PROPOSED ELECTRIC LINE
- T — PROPOSED TELEPHONE LINE
- FO — PROPOSED FIBER OPTIC LINE
- G — PROPOSED GAS LINE
- W — PROPOSED WATER LINE
- PROPOSED OVERHEAD UTILITY LINE
- PROPOSED CONDUIT
- PROPOSED LIGHT POLE
- PROPOSED WALL MOUNTED FDC, HYDRANT, WALL PIV, WATER VALVE, FREE STANDING FDC
- PROPOSED SANITARY MANHOLE, CLEAN OUT
- PROPOSED ELECTRIC TRANSFORMER

UTILITY NOTE:

THE UNDERGROUND UTILITIES SHOWN HAVE BEEN LOCATED FROM FIELD SURVEY INFORMATION AND EXISTING DRAWINGS. THE SURVEYOR MAKES NO GUARANTEES THAT THE UNDERGROUND UTILITIES COMPRISE ALL SUCH UTILITIES IN THE AREA, EITHER IN-SERVICE OR ABANDONED. THE SURVEYOR FURTHER DOES NOT WARRANT THAT THE UNDERGROUND UTILITIES SHOWN ARE IN THE EXACT LOCATION INDICATED ALTHOUGH THE SURVEYOR DOES CERTIFY THAT THEY ARE LOCATED AS ACCURATELY AS POSSIBLE FROM INFORMATION AVAILABLE. THE SURVEYOR HAS NOT PHYSICALLY LOCATED THE UNDERGROUND UTILITIES. INDIANA 811 ONE-CALL PUBLIC UTILITY LOCATE SERVICE TICKET NUMBERS 2405235264 AND 2405235311 WERE ISSUED FOR THIS SITE.

PRIOR TO ANY EXCAVATION FOR UNDERGROUND UTILITIES, THE CONTRACTOR SHALL EXPOSE AND VERIFY LOCATIONS (HORIZONTAL AND VERTICAL) OF ALL EXISTING UTILITIES INCLUDING BUT NOT LIMITED TO GAS, WATER, AND SANITARY SEWER. ANY CONFLICTS SHALL BE REPORTED IMMEDIATELY TO THE ENGINEER AND THE APPROPRIATE AUTHORITIES.

SCALE IN FEET
0 30 60

Indiana 811
Know what's below. Call before you dig.

BCSC TOGETHER WE LEARN

CSO
8831 Keystone Crossing, Indianapolis, IN 46240
317.848.7800 | csoinc.net
© 2018 CSO Architects, Inc. All Rights Reserved

Höweler+Yoon Architecture
617.517.4101 howeleryoon.com

Civil & Environmental Consultants, Inc.
530 E. Ohio Street · Suite G
Indianapolis, IN 46204
317-655-7777 · 877-746-0749
www.ceiinc.com

PROJECT:
BARTHOLOMEW CONSOLIDATED SCHOOL CORPORATION
MAPLE GROVE ELEMENTARY SCHOOL

SCOPE DRAWINGS:
These drawings indicate the general scope of the project in terms of architectural design concept, the dimensions of the building, the major architectural elements and the type of construction and mechanical systems required.
The drawings do not necessarily indicate or describe all work required for full performance and completion of the requirements of the Contract.
On the basis of the general scope indicated or described, the Contractor shall furnish all labor and items required for the proper execution and completion of the work.

REVISIONS:
(2) 06/17/2025 - ADDENDUM #02

ISSUE DATE	DRAWN BY	CHECKED BY
05/30/25	BEB	JMP

DRAWING TITLE:
UTILITY PLAN

CERTIFIED BY:
JONATHAN M. PASLAY REGISTERED No. PE12100829 STATE OF INDIANA PROFESSIONAL ENGINEER
05/30/2025

DRAWING NUMBER
C501

PROJECT NUMBER
2024022

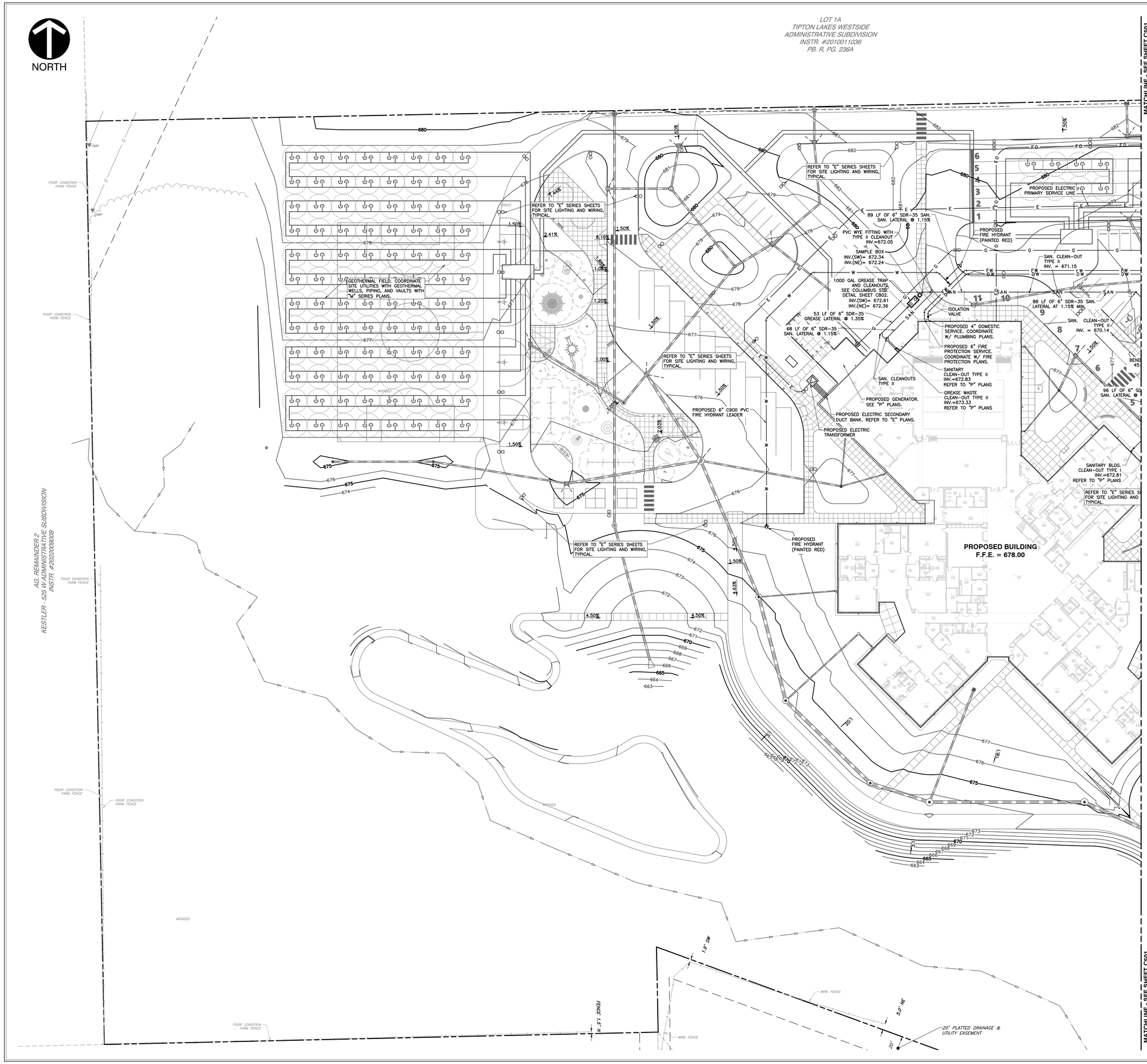

GENERAL UTILITY NOTES:

1. THE UTILITIES INDICATED ON THESE PLANS AND ON THE SURVEY MAY NOT BE A COMPLETE INVENTORY OF ALL THE EXISTING UTILITIES PRESENT ON AND AROUND THE SITE. THE LOCATION AND SIZE OF THESE UTILITIES MAY BE APPROXIMATE. THE ENGINEER SHALL NOT BE HELD LIABLE FOR ANY INACCURATE UTILITY INFORMATION INDICATED, IMPLIED, OR NOT INDICATED ON THESE PLANS.
2. IT SHALL BE THE CONTRACTOR'S RESPONSIBILITY TO LOCATE AND MAINTAIN IN SERVICE ALL EXISTING UTILITIES ENCOUNTERED DURING CONSTRUCTION UNLESS OTHERWISE INDICATED IN THE DRAWINGS. ANY PIPING, WHICH CAN BE REMOVED DURING CONSTRUCTION WITHOUT UNDUE INTERRUPTION OF SERVICE MAY BE REMOVED AND REPLACED BY THE CONTRACTOR, AT HIS EXPENSE WITH THE PERMISSION OF THE OWNER.
3. BEFORE WORKING WITH OR AROUND EXISTING UTILITIES, THE APPLICABLE UTILITY COMPANY SHALL BE CONTACTED BY THE CONTRACTOR.
4. WHEN CONNECTIONS ARE TO BE MADE TO EXISTING PIPING AND STRUCTURES OR WHERE CONSTRUCTION IS IN THE VICINITY OF EXISTING PIPING THE LOCATION AND ELEVATION OF THE EXISTING PIPING SHALL BE FIELD VERIFIED AND NOTIFICATION GIVEN TO THE OWNER IF THE EXISTING PIPING IS FOUND TO BE DIFFERENT THAN THAT SHOWN ON THE DRAWINGS.
5. FOR CLARITY OF THESE DRAWINGS, PIPES MAY NOT BE DRAWN TO SCALE OR EXACTLY LOCATED.
6. ALL NEW WATER LINES SHALL HAVE A MINIMUM OF 54 INCHES OF COVER.
7. MINIMUM OF 18 INCHES OF VERTICAL CLEARANCE SHALL BE PROVIDED BETWEEN NEW WATER AND SANITARY SEWER LINES. IF 18 INCHES OF CLEARANCE IS NOT PROVIDED THEN THE SEWER MUST BE CONSTRUCTED OF WATER WORKS GRADE DUCTILE IRON PIPE WITH MECHANICAL JOINTS WITHIN TEN FEET OF THE WATER LINE.
8. IT IS THE RESPONSIBILITY OF THE CONTRACTOR OR CONTRACTORS TO OBTAIN ALL FEDERAL, STATE, COUNTY, CITY OR LOCAL PERMITS FOR ANY AND ALL WORK REQUIRED UNLESS OTHERWISE NOTED. THE CONTRACTOR OR CONTRACTORS ARE RESPONSIBLE TO PAY FOR ALL REQUIRED PERMITS BY ANY OR ALL AGENCIES MENTIONED ABOVE UNLESS OTHERWISE NOTED IN THE CONTRACT OR SPECIFICATIONS. ALL ASSOCIATED BONDING REQUIREMENTS AND COSTS ARE INCIDENTAL TO THE CONTRACT.
9. THE CONTRACTOR SHALL VERIFY ALL DIMENSIONS AND ELEVATIONS IN THE FIELD PRIOR TO THE START OF CONSTRUCTION. THE CONTRACTOR SHALL BE RESPONSIBLE FOR ALL FIELD DIMENSIONS AND ELEVATIONS DURING THE ENTIRE CONSTRUCTION SCHEDULE. IF ANY DISCREPANCIES ARE FOUND IN THESE ENGINEERING PLANS FROM ACTUAL FIELD DIMENSIONS, THE CONTRACTOR SHALL CONTACT THE ENGINEER IMMEDIATELY.
10. ALL CONSTRUCTION METHODS AND MATERIALS MUST CONFORM TO CURRENT STANDARDS AND SPECIFICATIONS OF THE FEDERAL, STATE, COUNTY, CITY OR LOCAL REQUIREMENTS, WHICHEVER HAS JURISDICTION.
11. CONTRACTOR IS RESPONSIBLE FOR ELECTRIC, TELEPHONE, AND CABLE CONDUITS AND TRENCHING. COORDINATE WITH THE LOCAL UTILITY PROVIDERS AND MECHANICAL, ELECTRICAL AND PLUMBING PLANS FOR SIZES AND QUANTITIES.
12. ENSURE THE BACKFLOW PREVENTION MEETS INDIANA CROSS CONNECTION CONTROL MANUAL. (2)
13. WATER AND SANITARY SEWER CONNECTIONS MUST MEET CURRENT CCU STANDARD SPECIFICATIONS AND DETAILS.
14. CCU MUST PARTICIPATE IN ON-SITE PRE-CONSTRUCTION MEETING.
15. FINAL UTILITY PLAN RECORD DRAWINGS SHALL BE PROVIDED TO CCU AFTER CONNECTIONS ARE COMPLETED.

UTILITY LEGEND:

- PROPOSED STORM SEWER LINE
- SAN — PROPOSED SANITARY LINE
- E — PROPOSED ELECTRIC LINE
- T — PROPOSED TELEPHONE LINE
- FO — PROPOSED FIBER OPTIC LINE
- G — PROPOSED GAS LINE
- W — PROPOSED WATER LINE
- PROPOSED OVERHEAD UTILITY LINE
- PROPOSED CONDUIT
- PROPOSED LIGHT POLE
- PROPOSED WALL MOUNTED FDC, HYDRANT, WALL PIV, WATER VALVE, FREE STANDING FDC
- PROPOSED SANITARY MANHOLE, CLEAN OUT
- PROPOSED ELECTRIC TRANSFORMER

UTILITY NOTE:

THE UNDERGROUND UTILITIES SHOWN HAVE BEEN LOCATED FROM FIELD SURVEY INFORMATION AND EXISTING DRAWINGS. THE SURVEYOR MAKES NO GUARANTEES THAT THE UNDERGROUND UTILITIES COMPRISE ALL SUCH UTILITIES IN THE AREA, EITHER IN-SERVICE OR ABANDONED. THE SURVEYOR FURTHER DOES NOT WARRANT THAT THE UNDERGROUND UTILITIES SHOWN ARE IN THE EXACT LOCATION INDICATED ALTHOUGH THE SURVEYOR DOES CERTIFY THAT THEY ARE LOCATED AS ACCURATELY AS POSSIBLE FROM INFORMATION AVAILABLE. THE SURVEYOR HAS NOT PHYSICALLY LOCATED THE UNDERGROUND UTILITIES. INDIANA 811 ONE-CALL PUBLIC UTILITY LOCATE SERVICE TICKET NUMBERS 2405235264 AND 2405235311 WERE ISSUED FOR THIS SITE.

PRIOR TO ANY EXCAVATION FOR UNDERGROUND UTILITIES, THE CONTRACTOR SHALL EXPOSE AND VERIFY LOCATIONS (HORIZONTAL AND VERTICAL) OF ALL EXISTING UTILITIES INCLUDING BUT NOT LIMITED TO GAS, WATER, AND SANITARY SEWER. ANY CONFLICTS SHALL BE REPORTED IMMEDIATELY TO THE ENGINEER AND THE APPROPRIATE AUTHORITIES.

SCALE IN FEET
0 30 60

Indiana 811
Know what's below. Call before you dig.

BCSC TOGETHER WE LEARN

CSO
8831 Keystone Crossing, Indianapolis, IN 46240
317.848.7800 | csoinc.net

© 2018 CSO Architects, Inc. All Rights Reserved

Höweler+Yoon Architecture
617.517.4101 howeleryoon.com

Civil & Environmental Consultants, Inc.
530 E. Ohio Street · Suite G
Indianapolis, IN 46204
317-655-7777 · 877-746-0749
www.ceiinc.com

PROJECT:
BARTHOLOMEW CONSOLIDATED SCHOOL CORPORATION
MAPLE GROVE ELEMENTARY SCHOOL

SCOPE DRAWINGS:
These drawings indicate the general scope of the project in terms of architectural design concept, the dimensions of the building, the major architectural elements and the type of structural, mechanical and electrical systems.
The drawings do not necessarily indicate or describe all work required for the complete scope and completion of the requirements of the Contract.
On the basis of the general scope indicated or described, the trade contractors shall furnish all items required for the proper execution and completion of the work.

REVISIONS:
(2) 06/17/2025 - ADDENDUM #02

ISSUE DATE	DRAWN BY	CHECKED BY
05/30/25	BEB	JMP

DRAWING TITLE:
UTILITY PLAN

CERTIFIED BY:
JONATHAN M. PLASYK REGISTERED No. PE12100829 STATE OF INDIANA PROFESSIONAL ENGINEER
05/30/2025

DRAWING NUMBER
C502

PROJECT NUMBER
2024022

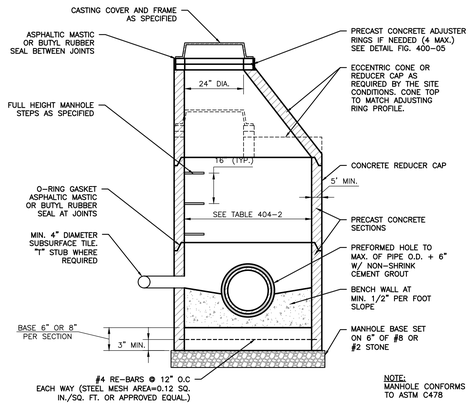

*NOTE: INLET CASTINGS SHALL HAVE THE WORDS "NO DUMPING, DRAINS TO STREAM" CAST IN RAISED OR RECESSED LETTERS AT A MINIMUM 1" IN HEIGHT. A SYMBOL OF A FISH SHALL ALSO BE CAST WITH THE LETTERS.

DETAIL 407 - STANDARD MANHOLE FOR PIPE SIZES 12" thru 24"

NOT TO SCALE

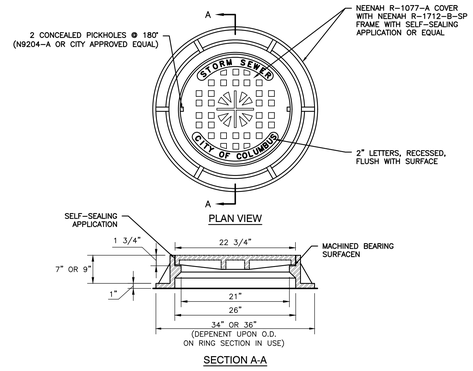

*NOTE: INLET CASTINGS SHALL HAVE THE WORDS "NO DUMPING, DRAINS TO STREAM" CAST IN RAISED OR RECESSED LETTERS AT A MINIMUM 1" IN HEIGHT. A SYMBOL OF A FISH SHALL ALSO BE CAST WITH THE LETTERS.

DETAIL 408 - STORM SEWER MANHOLE FRAME & COVER

NOT TO SCALE

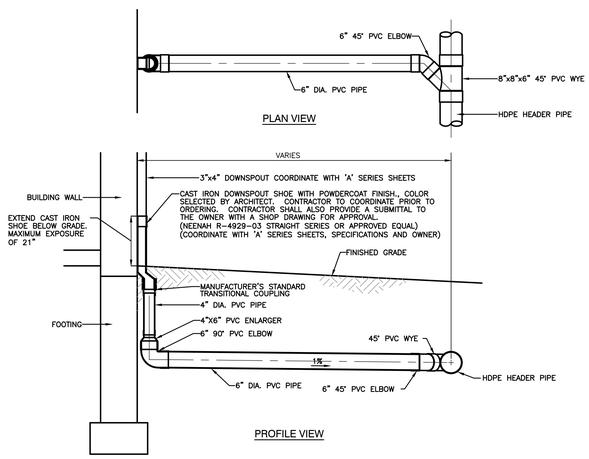

DETAIL 414 - TYPICAL DOWNSPOUT CONNECTION TO ROOF DRAIN DETAIL

NOT TO SCALE

BCSC TOGETHER WE LEARN

CSO
8831 Keystone Crossing, Indianapolis, IN 46240
317.848.7800 | csoinc.net

© 2018 CSO Architects, Inc. All Rights Reserved

Höweler+Yoon Architecture
617.517.4101 howeleryoon.com

Civil & Environmental Consultants, Inc.
530 E. Ohio Street · Suite G
Indianapolis, IN 46204
317-655-7777 · 877-746-0749
www.ceciinc.com

PROJECT:
BARTHOLOMEW CONSOLIDATED SCHOOL CORPORATION
MAPLE GROVE ELEMENTARY SCHOOL

SCOPE DRAWINGS:
These drawings indicate the general scope of the project in terms of architectural and structural dimensions of building, the major architectural elements and the type of structural, mechanical and electrical system.
The drawings do not necessarily indicate or describe all work required for full performance and completion of the contract unless "NOT IN CONTRACT".
On the basis of the general scope indicated or described, the trade contractors shall furnish all items required for the proper execution and completion of the work.

REVISIONS:
1 06/10/2025 - ADDENDUM #01
2 06/17/2025 - ADDENDUM #02

ISSUE DATE	DRAWN BY	CHECKED BY
05/30/25	BEB	JMP

DRAWING TITLE:
SITE DETAILS

CERTIFIED BY:
JONATHAN M. PASLEY
REGISTERED
No. PE12100829
STATE OF INDIANA
PROFESSIONAL ENGINEER
05/30/2025

2 DRAWING NUMBER
C800

PROJECT NUMBER
2024022

Indiana 811
Know what's below. Call before you dig.

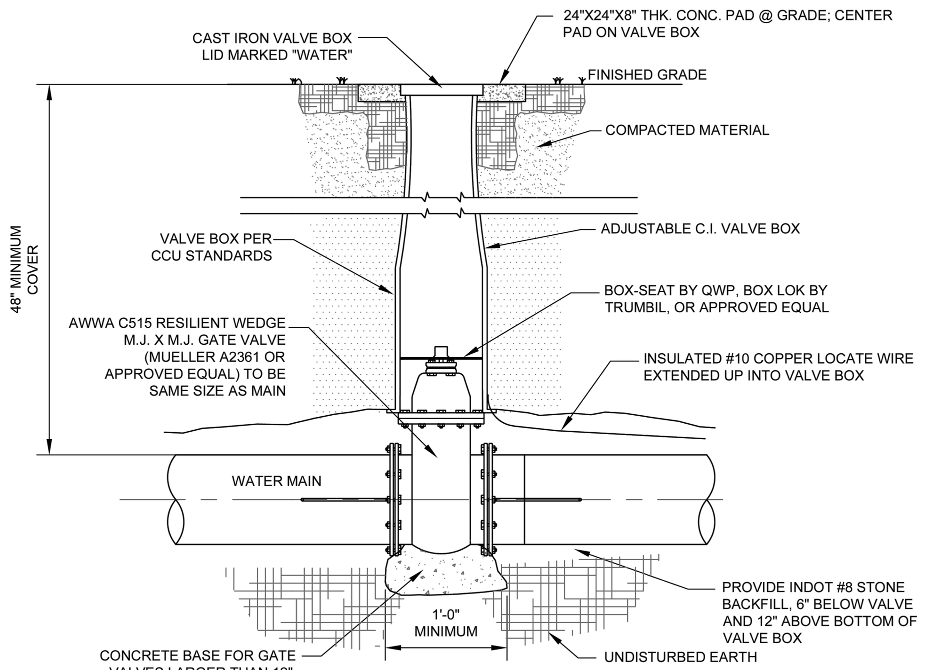

NOTES:
1. VALVE OPERATING NUT SHALL BE MAX. 36" FROM GRADE. IF DEEPER THAN 36", EXTENSION STEM SHALL BE PROVIDED.
2. VALVE JOINTS SHALL BE RESTRAINED. RESTRAIN PIPE PER CCU STANDARDS.
3. VALVE BOX SHALL NOT REST ON VALVE.

REVISIONS			
NO.	DESCRIPTION	DATE	BY

TYPICAL GATE VALVE AND VALVE BOX

STANDARD DETAILS
COLUMBUS CITY UTILITIES

DATE: 10/13/21 SCALE: NTS SHEET NO. 3

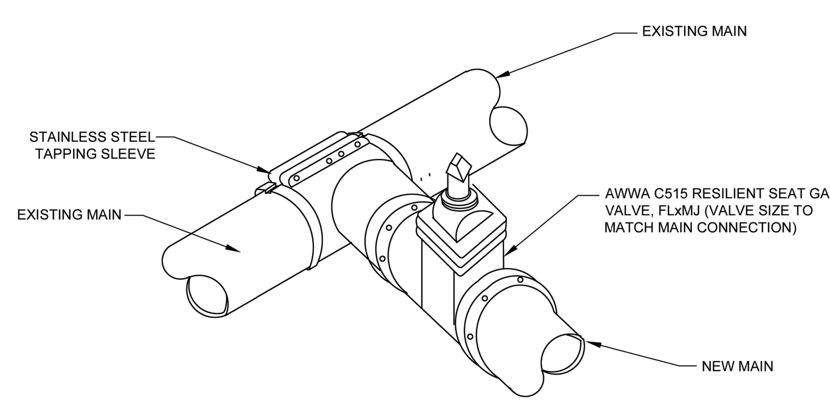

NOTE:
1. NO MECHANICAL JOINT TAPPING SLEEVES WILL BE ACCEPTED.
2. BOLTS, NUTS, & WASHERS SHALL BE 304 STAINLESS STEEL.
3. STAINLESS STEEL BOLTS SHALL BE INSTALLED WITH ANTI-SEIZE.
4. CONTRACTOR SHALL COMPLETE HYDROSTATIC TESTING ON TAPPING SLEEVE FOR A MINIMUM OF 15 MINUTES AT 150 PSI.

REVISIONS			
NO.	DESCRIPTION	DATE	BY

TAPPING SLEEVE AND VALVE

STANDARD DETAILS
COLUMBUS CITY UTILITIES

DATE: 10/13/21 SCALE: NTS SHEET NO. 4

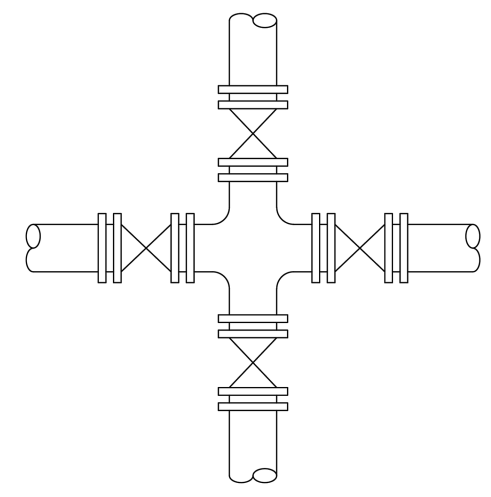

4 VALVES REQUIRED AT "CROSS"

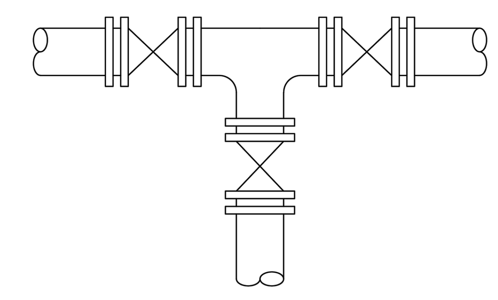

3 VALVES REQUIRED AT "TEE"

REVISIONS			
NO.	DESCRIPTION	DATE	BY

VALVES AT INTERSECTIONS

STANDARD DETAILS
COLUMBUS CITY UTILITIES

DATE: 10/13/21 SCALE: NTS SHEET NO. 5

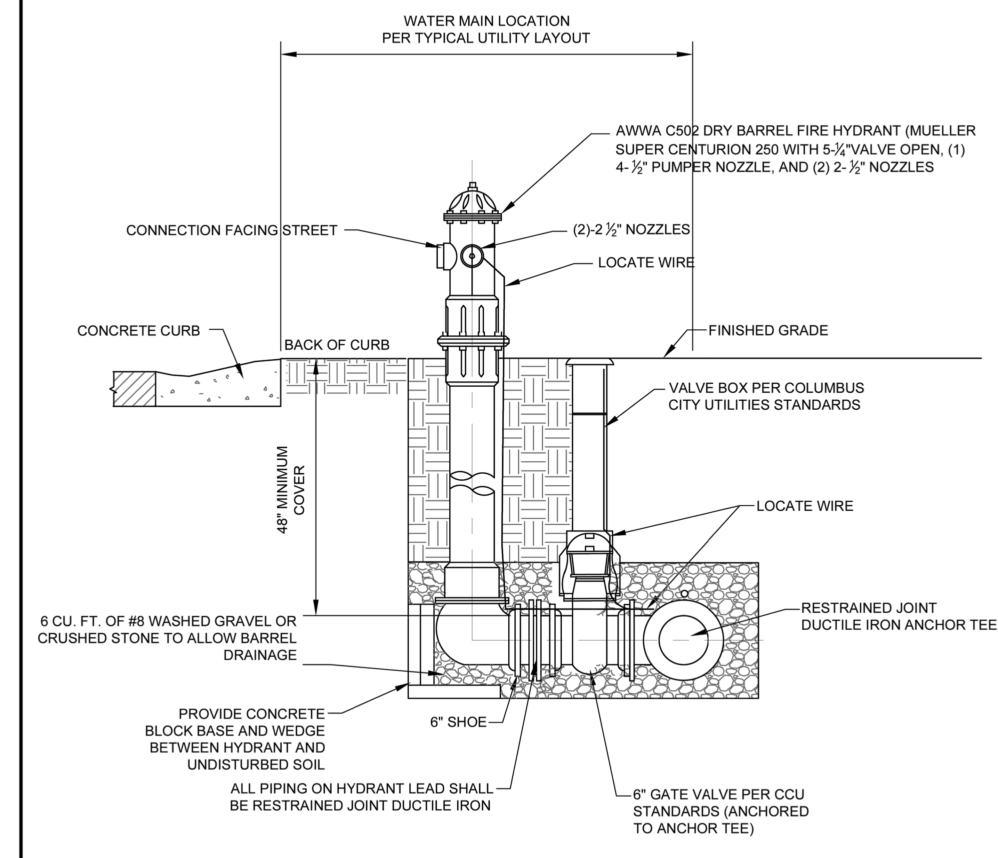

NOTE:
1. FIRE HYDRANT SHALL BE PAINTED SAFETY YELLOW (PRIVATE HYDRANT SHALL BE PAINTED RED)
2. SNOWPLOWABLE BLUE REFLECTORS SHALL BE INSTALLED IN CENTER OF ROAD AT ALL FIRE HYDRANTS; PROVIDE COLUMBUS CITY UTILITIES WITH AN OPERATING WRENCH AND TRAFFIC DAMAGE REPAIR KIT(S). SEE COLUMBUS CITY UTILITIES SPECIFICATIONS.

REVISIONS			
NO.	DESCRIPTION	DATE	BY

STANDARD FIRE HYDRANT

STANDARD DETAILS
COLUMBUS CITY UTILITIES

DATE: 10/13/21 SCALE: NTS SHEET NO. 6

NOTES:

1. CUSTOMER SHALL FURNISH & INSTALL VAULT, INCLUDING ALL APPURTENANCES EXCEPT AS NOTED BELOW.
2. VAULT CONSTRUCTION MATERIALS SHALL BE 8"x8"x16" CMU, OR PRECAST, OR CAST IN PLACE CONCRETE AT CUSTOMER'S SELECTION.
3. INSIDE DIMENSIONS PER DRAWING NOTES, VAULT TO BE SET LENGTHWISE WITH SERVICE.
4. TOP OF VAULT TO BE CONCRETE, AT LEAST 4" THICK WITH REINFORCING SUITABLE FOR ANTICIPATED LOADING. WHEN VAULT IS CONSTRUCTED IN PAVED AREAS, PAVED AREAS, PAVEMENT IS TO BE LEVEL WITH TOP OF VAULT, AND THE TOP REINFORCED AS REQUIRED TO SUPPORT TRAFFIC LOADS (i.e. H-20 WHEEL LOADS). WHEN VAULT IS CONSTRUCTED IN GRASS PLOT, TOP OF VAULT SHALL BE 3" ABOVE FINISHED GRADE.
5. BOTTOM OF VAULT TO BE MINIMUM 4" CONCRETE PER FIRE DEPARTMENT'S REQUIREMENT. MINIMUM CLEARANCE OF 12" BELOW BOTTOM OF FIRE SERVICE AND DOMESTIC SERVICE LINES IS REQUIRED.
6. DOUBLE CHECK DETECTOR ASSEMBLY SHALL BE A MODEL APPROVED BY THE INDIANA DEPARTMENT OF ENVIRONMENTAL MANAGEMENT, WITH FLANGED OS&Y GATE VALVE ON INLET AND OUTLET SIDES. DETECTOR METER IS FURNISHED BY UTILITY AND INSTALLED BY CUSTOMER. STAINLESS STEEL BOLTS ARE REQUIRED.
7. ACCESS HATCH IN TOP OF VAULT SHALL BE 36"x36". THE ACCESS HATCHES SHALL BE ALUMINUM TYPE "CLS2" AS MANUFACTURED BY EJCO OR APPROVED EQUAL. ACCESS HATCH SHALL HAVE SAME OR GREATER LOADING CAPACITY AS VAULT LID. PIPE HATCH FRAME DRAIN TO VAULT SUMP, AS APPLICABLE. A SUMP PUMP SHALL BE INSTALLED IN THE VAULT, ELECTRICAL DISCONNECT IS REQUIRED ON TOP OF VAULT, INSTALLED ABOVE GRADE, PER LOCAL ELECTRICAL CODE.
8. METER SHALL BE SIZED APPROPRIATELY FOR REQUIRED FLOWS. IF REDUCERS ARE REQUIRED, THERE SHALL BE ADEQUATE SPACING UPSTREAM (5 PIPE DIAMETERS) AND DOWNSTREAM (2 PIPE DIAMETERS) FOR METER ACCURACY A 2" TEST PLUG SHALL BE INSTALLED AT LEAST 2 PIPE DIAMETERS DOWNSTREAM OF METERS.
9. AS DIRECTED BY COLUMBUS CITY UTILITIES, ADDITIONAL PIPE SUPPORTS MAY BE REQUIRED.
10. ABOVE GROUND BACKFLOW PREVENTER APPROVED BY INDIANA DEPARTMENT OF ENVIRONMENTAL MANAGEMENT SHALL BE INSTALLED ON IRRIGATION SERVICE OUTSIDE OF VAULT.
11. RPZ BACKFLOW PREVENTER APPROVED BY INDIANA DEPARTMENT OF ENVIRONMENTAL MANAGEMENT SHALL BE INSTALLED ON DOMESTIC SERVICE INSIDE OF BUILDING.
12. FOR DOMESTIC/IRRIGATION SERVICE 2" AND SMALLER, METER(S) MAY BE IN SEPARATE METER PIT(S) AT RIGHT-OF WAY.
13. UNLESS OTHERWISE NOTED, ALL PIPE SHALL BE RESTRAINED JOINT DUCTILE IRON OUTSIDE OF VAULT AND FLANGED JOINT DUCTILE IRON INSIDE OF VAULT.

LEGEND:

- (A) RJDI BEND
- (B) RJDI TEE
- (C) ALUM. LADDER W/SAFETY UP POST
- (D) DOUBLE CHECK DETECTOR ASSEMBLY
- (E) FLANGED OS&Y VALVE
- (F) FIRE LINE
- (G) DOMESTIC SERVICE (MIN. 4" DIAMETER INSIDE VAULT; SEE NOTE 8)
- (H) 2" TEST PLUG (SEE NOTE 8)
- (I) TAPPING SLEEVE W/TAPPING VALVE & BOX (COORDINATE W/ CCU)
- (J) RLDI GATE VALVE
- (K) DOMESTIC SERVICE METER (SEE NOTE 8)
- (L) FLANGED TEE
- (M) DETECTOR METER (SEE NOTE 8)
- (N) SUMP PUMP (18"x12" DEEP)
- (O) FLANGED OS&Y VALVE WITH PIT TYPE POST INDICATION
- (P) SUMP PUMP LID (METER PIT LID WITH TRANSMITTERS)
- (Q) ACCESS HATCH (SEE NOTE 7)
- (R) CHECK VALVE W/ BALL DRIP VALVE
- (S) RESTRAINED FLANGE COUPLING ADAPTOR EBAA IRON MEGA FLANGE SERIES 2100
- (T) IRRIGATION SERVICE METER (SEE NOTE 8)
- (U) IRRIGATION SERVICE (MIN. 4" DIAMETER INSIDE VAULT; SEE NOTE 8)

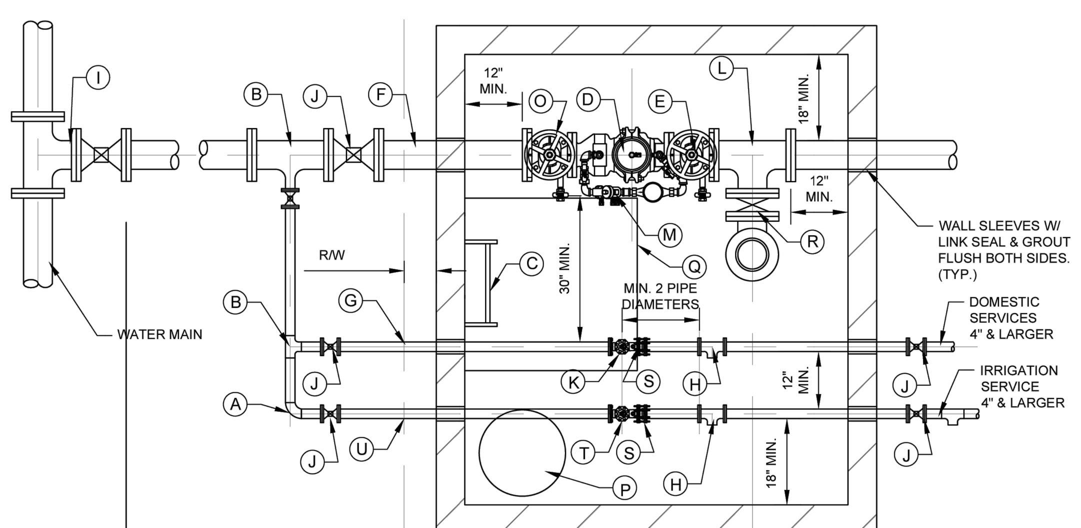

PLAN VIEW

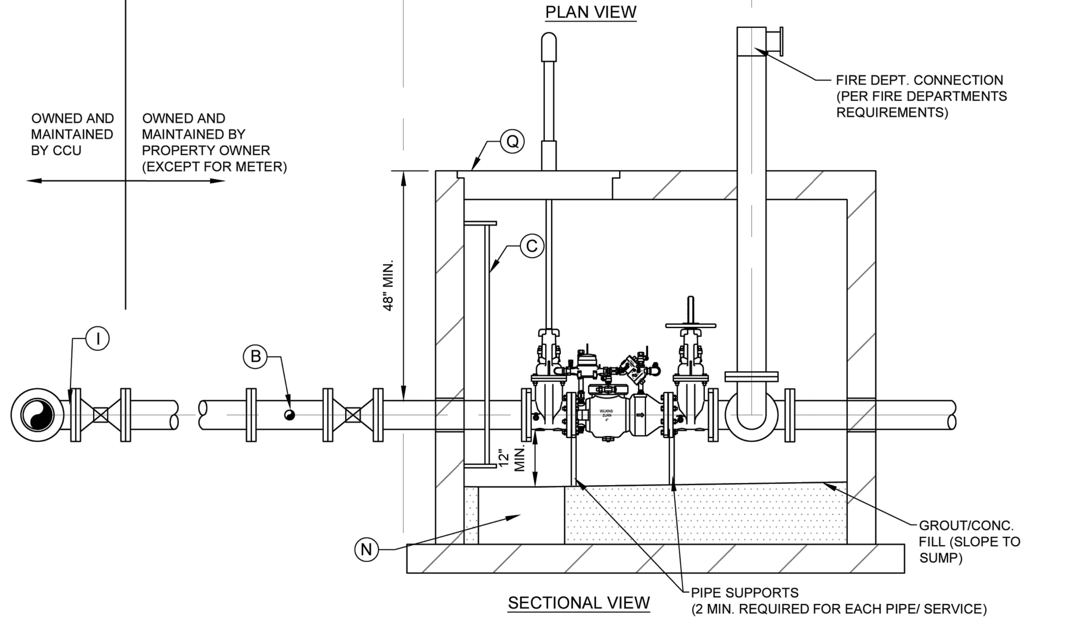

SECTIONAL VIEW

REVISIONS			
NO.	DESCRIPTION	DATE	BY

FIRE LINE DOUBLE DETECTOR ASSEMBLY WITH DOMESTIC/IRRIGATION METER(S)

STANDARD DETAILS
COLUMBUS CITY UTILITIES

DATE: 10/13/21 SCALE: NTS SHEET NO. 10

*NOTE: CONTRACTOR TO PROVIDE BACKFLOW PREVENTION THAT MEETS INDIANA CROSS CONNECTION CONTROL MANUAL.

2

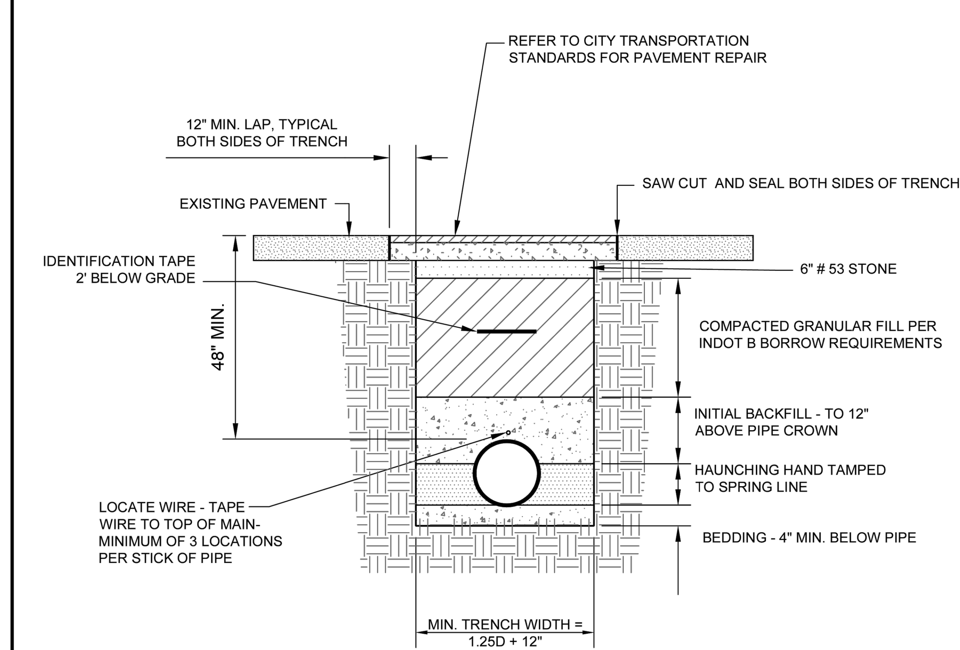

BEDDING, HAUNCHING AND INITIAL BACKFILL SHALL BE (INDOT #8 STONE OR CLASS II CLEAN SAND PER ASTM C12)

NOTES:
1. EXISTING PAVEMENT IS TO BE SAW CUT FOR A CLEAN BREAK.
2. TRENCH SPOIL IS TO BE REMOVED FROM THE WORK SITE.
3. NEW SURFACE TO BE SLOPED AT SAME RATE AS THE EXISTING SURFACE.
4. GRANULAR FILL SHALL BE PROVIDED WITHIN 5' OF PAVED SURFACE.

REVISIONS			
NO.	DESCRIPTION	DATE	BY

WATERMAIN / FORCEMAIN TYPICAL TRENCH FOR D.I. OR PVC C900 PIPE IN PAVED AREAS

STANDARD DETAILS
COLUMBUS CITY UTILITIES

DATE: 10/13/21 SCALE: NTS SHEET NO. 12

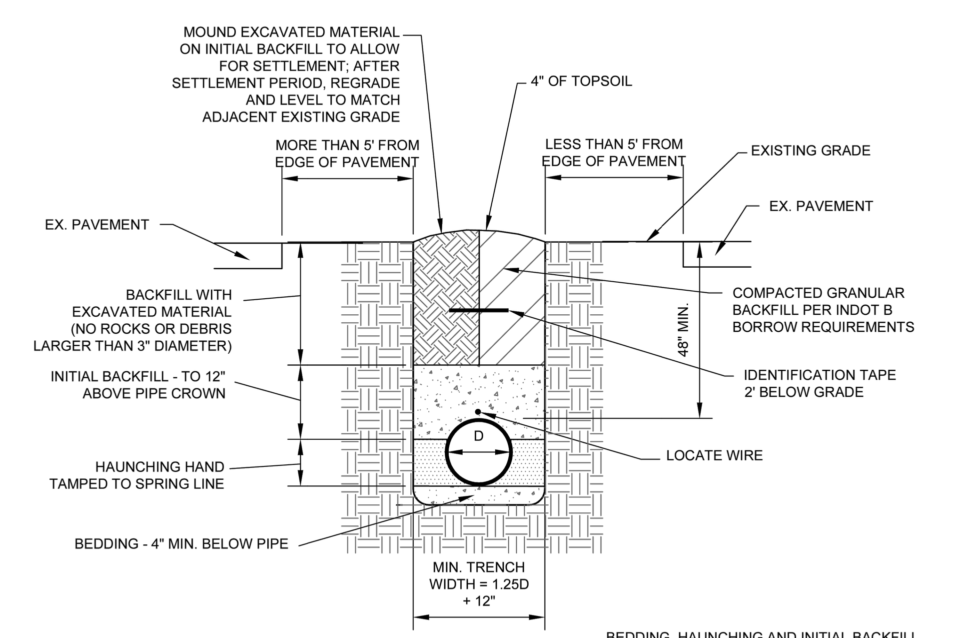

BEDDING, HAUNCHING AND INITIAL BACKFILL SHALL BE (INDOT #8 STONE OR CLASS II CLEAN SAND PER ASTM C12)

REVISIONS			
NO.	DESCRIPTION	DATE	BY

WATERMAIN / FORCEMAIN TYPICAL TRENCH FOR D.I. OR PVC C900 PIPE IN UNPAVED AREAS

STANDARD DETAILS
COLUMBUS CITY UTILITIES

DATE: 10/13/21 SCALE: NTS SHEET NO. 13

Indiana811 Know what's below. Call before you dig.

BCSC TOGETHER WE LEARN

CSO
8831 Keystone Crossing, Indianapolis, IN 46240
317.848.7800 | csoinc.net
© 2018 CSO Architects, Inc. All Rights Reserved

Höweler+Yoon Architecture
617.517.4101 howeleryoon.com

CEC
Civil & Environmental Consultants, Inc.
530 E. Ohio Street · Suite G
Indianapolis, IN 46204
317-655-7777 · 877-746-0749
www.cecinc.com

PROJECT:
BARTHOLOMEW CONSOLIDATED SCHOOL CORPORATION
MAPLE GROVE ELEMENTARY SCHOOL

SCOPE DRAWINGS:
These drawings indicate the general scope of the project in terms of architectural design concept, the dimensions of the building, the major architectural elements and the type of structural, mechanical and electrical systems.
The drawings do not necessarily indicate or describe all work required for full performance and completion of the requirements of the Contract.
On the basis of the general scope indicated or described, the trade contractors shall furnish all items required for the proper execution and completion of the work.

REVISIONS:
2 06/17/2025 - ADDENDUM #02

ISSUE DATE	DRAWN BY	CHECKED BY
05/30/25	BEB	JMP

DRAWING TITLE:
WATER DETAILS

CERTIFIED BY:
JONATHAN M. PASYK REGISTERED No. PE12100829 STATE OF INDIANA PROFESSIONAL ENGINEER
05/30/2025

DRAWING NUMBER
C801

PROJECT NUMBER
2024022

DIMENSIONS (INCHES)		
A (MAX.)	B (I.D.)	C (MIN.)
18	48	25
21	48	28
24	48	31
27	60	34
30	60	38
33	60	41
36	60	44
42	60	50

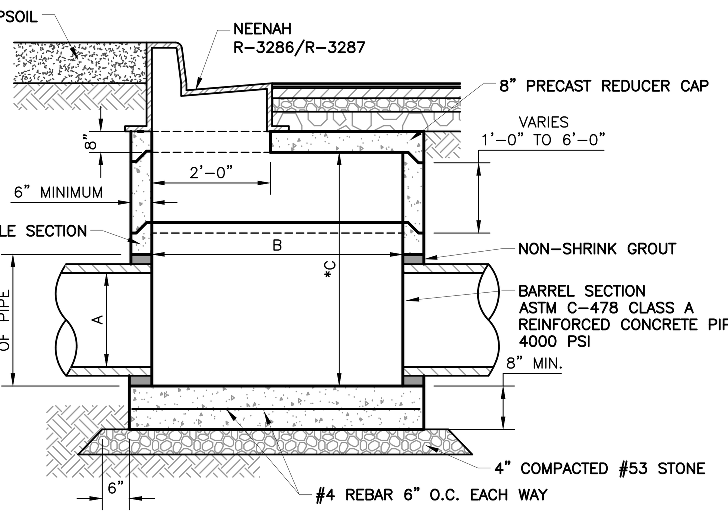

* MANHOLE STEPS REQUIRED
IF DEPTH EXCEEDS 4'-0"
(AT 16" MAX. ON CENTERS)

DETAIL 427 - CURB MANHOLE
NOT TO SCALE

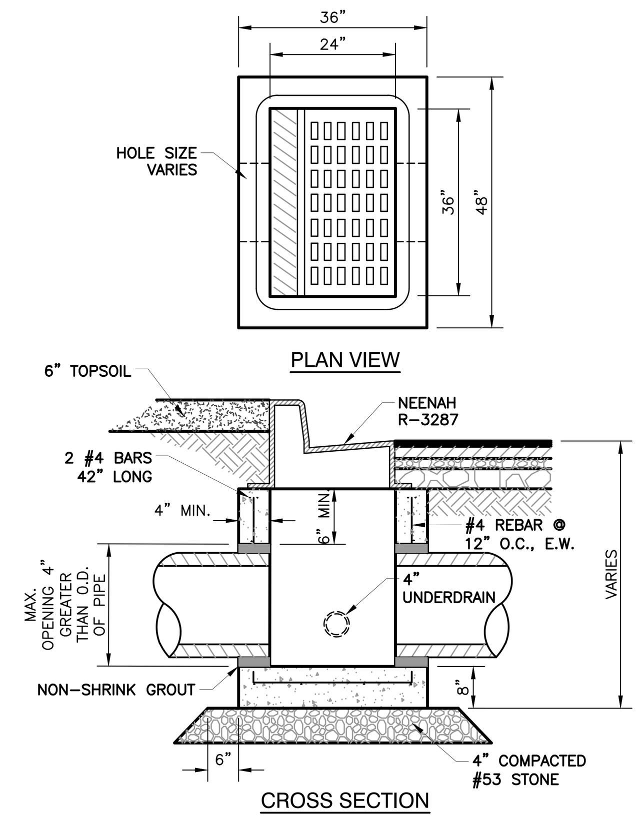

DETAIL 424 - CURB INLET TYPE "M"
NOT TO SCALE

NYLOPLAST INLINE DRAIN: 27 _ _ AG _ _ X

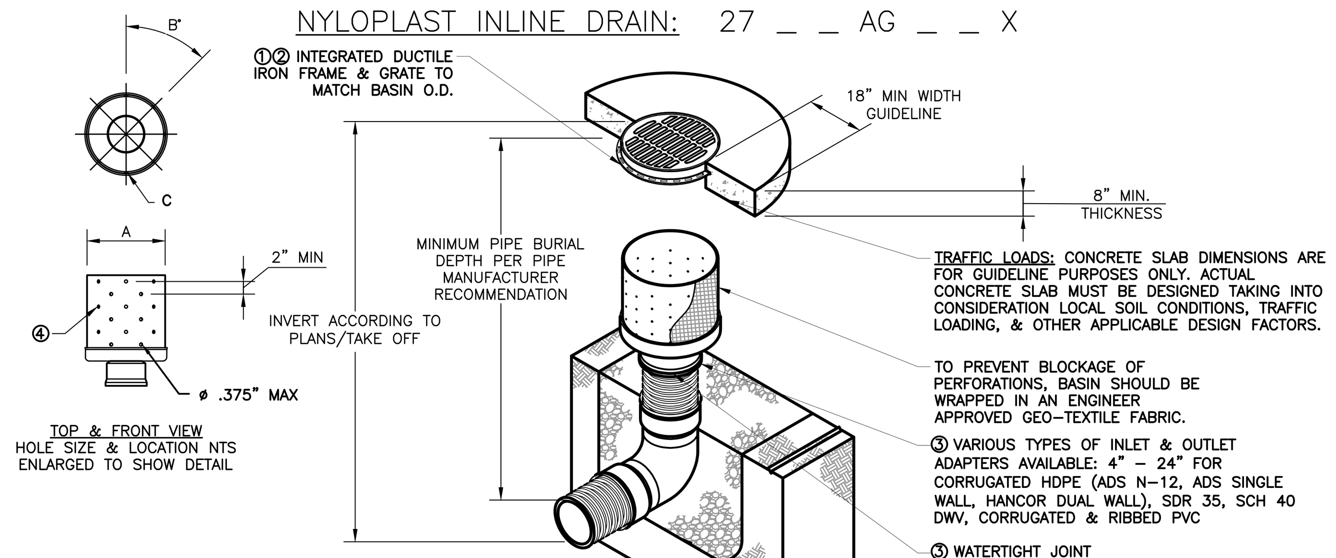

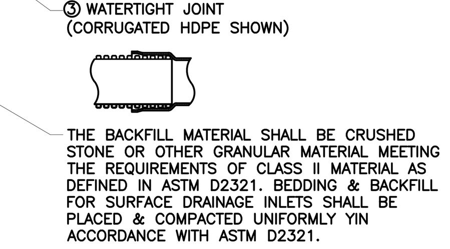

A	B°	C	PART #	GRATE OPTIONS				
8"	90°	4	2808AG	PEDESTRIAN/STANDARD		SOLID	BRONZE	DOME	DROP IN
10"	90°	4	2810AG	PEDESTRIAN/STANDARD		SOLID	BRONZE	DOME	DROP IN
12"	60°	6	2812AG	PEDESTRIAN	STANDARD	SOLID	BRONZE	DOME	DROP IN
15"	60°	6	2815AG	PEDESTRIAN	STANDARD	SOLID	BRONZE	DOME	DROP IN
18"	45°	8	2818AG	PEDESTRIAN	STANDARD	SOLID	N/A	DOME	DROP IN
24"	45°	8	2824AG	PEDESTRIAN	STANDARD	SOLID	N/A	DOME	DROP IN
30"	36°	10	2830AG	PEDESTRIAN	STANDARD	SOLID	N/A	DOME	N/A

A - BASIN SIZE, B° - ANGLE BETWEEN HOLES, C - NUMBER OF HOLES

① – GRATES/SOLID COVERS SHALL BE DUCTILE IRON PER ASTM A536 GRADE 70-50-05, WITH THE EXCEPTION OF THE BRONZE GRATES
② – FRAMES SHALL BE DUCTILE IRON PER ASTM A536 GRADE 70-50-05
③ – DRAINAGE CONNECTION STUB JOINT TIGHTNESS SHALL CONFORM TO ASTM D3212 FOR CORRUGATED HDPE (ADS & HANCOR DUAL WALL) & SDR 35 PVC
④ – PERFORATIONS SHOULD NOT BE ON OR WITHIN 1" OF ADAPTERS.
5 – HOLES SHOULD BE STAGGERED EVERY OTHER ROW, AS SHOWN.
6 – GRATES SHALL MEET H-10 LOAD RATING FOR 12" – 24" PED
7 – GRATES SHALL MEET H-20 LOAD RATING FOR 30" PED & 12" – 30" STD & SOLID
8 – ALL BRONZE GRATES, DROP IN GRATES, & 8" & 10" PED/STD GRATES & SOLID COVERS ARE RATED FOR LIGHT DUTY APPLICATIONS ONLY
8 – DOME GRATES HAVE NO LOAD RATING

DETAIL 421 - 8 IN - 30 IN PERFORATED INLINE DRAIN WITH STANDARD GRATE QUICK SPEC INSTALLATION DETAIL
NOT TO SCALE

INSTALLATION REQUIRED

1. EXTENDING 20' FROM STORM INLETS OR MANHOLE WHERE SHOWN ON THE UTILITY & GRADING PLAN.
2. PIPE MATERIAL PER INDIANA DEPT. OF TRANSPORTATION SPECS. No. 218.02

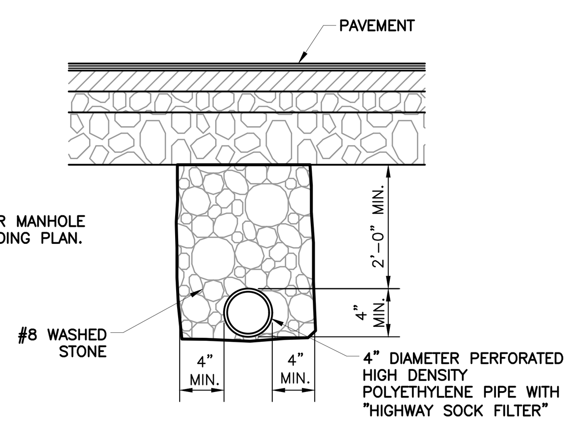

DETAIL 428 - 4" PIPE UNDERDRAIN UNDER PAVEMENT
NOT TO SCALE

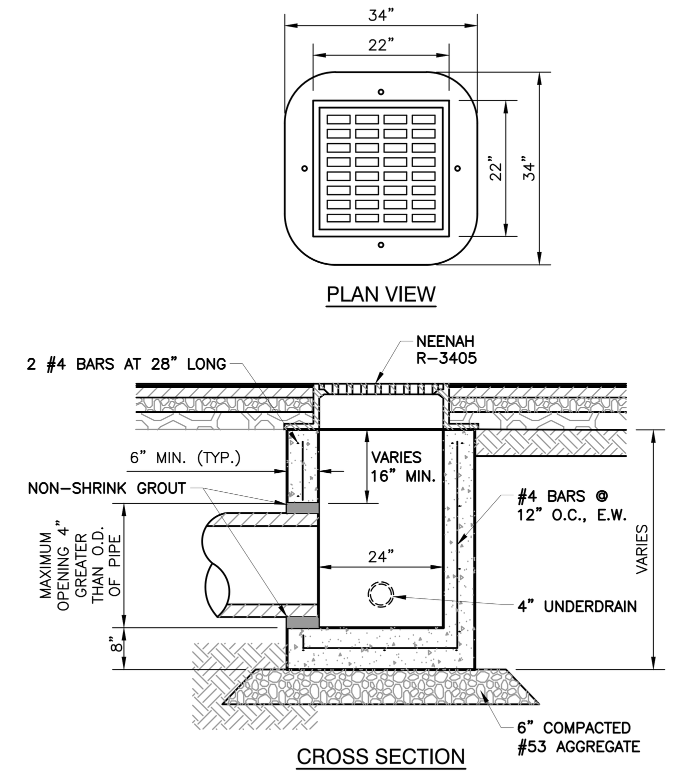

DETAIL 425 - PAVEMENT INLET TYPE "A"
NOT TO SCALE

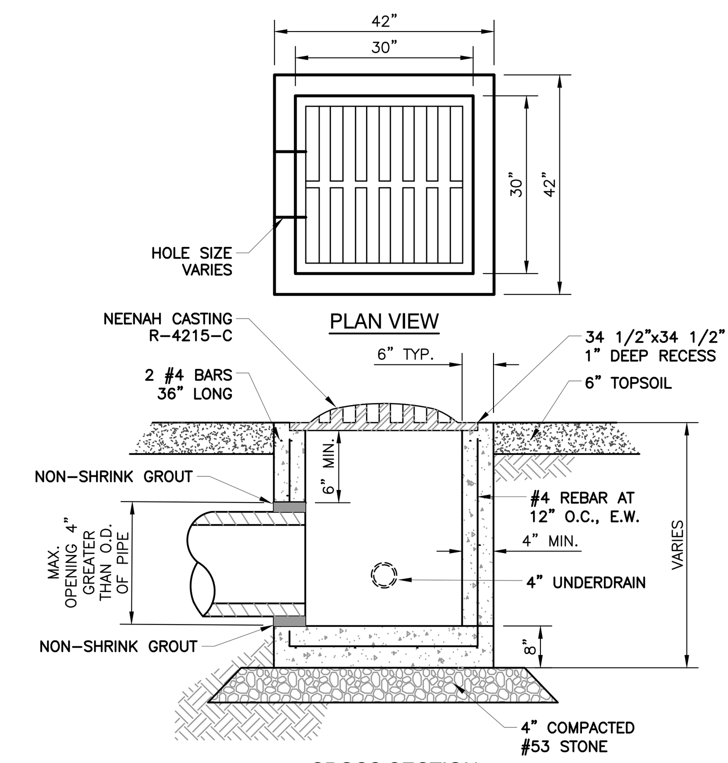

DETAIL 422 - INLET TYPE "E"
NOT TO SCALE

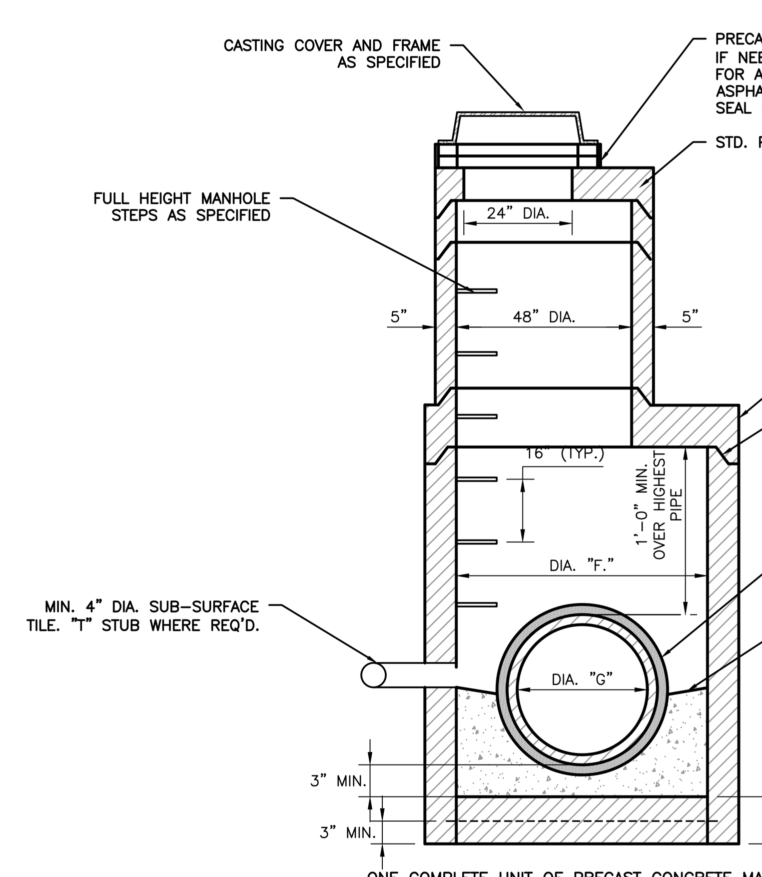

MANHOLE	PIPE	PIPE TURNS
DIA. "F"	DIA. "G"	
96"	48"	GREATER THAN 45° TO 90°
96"	54"–66"	UP TO 60°
84"	42"	GREATER THAN 45" TO 90"
84"	48"	UP TO 45°
72"	42"–48"	UP TO 45°
60"	33"–36"	STRAIGHT THRU
60"	27"–33"	GREATER THAN 45" TO 90"

NOTE:

1. MANHOLE CONFORMS TO ASTM C478
2. NO BRICK OR BLOCK WILL BE ALLOWED IN MANHOLE N.

ONE COMPLETE UNIT OF PRECAST CONCRETE MANHOLE BASE & RISER OR APPROVED ALTERNATIVE.
SEPARATE BASE & RISER SECTION IS OPTIONAL.

DETAIL 426 - MANHOLE BASE, RISER & REDUCER CAP FOR PIPE 27" thru 48"
NOT TO SCALE

2

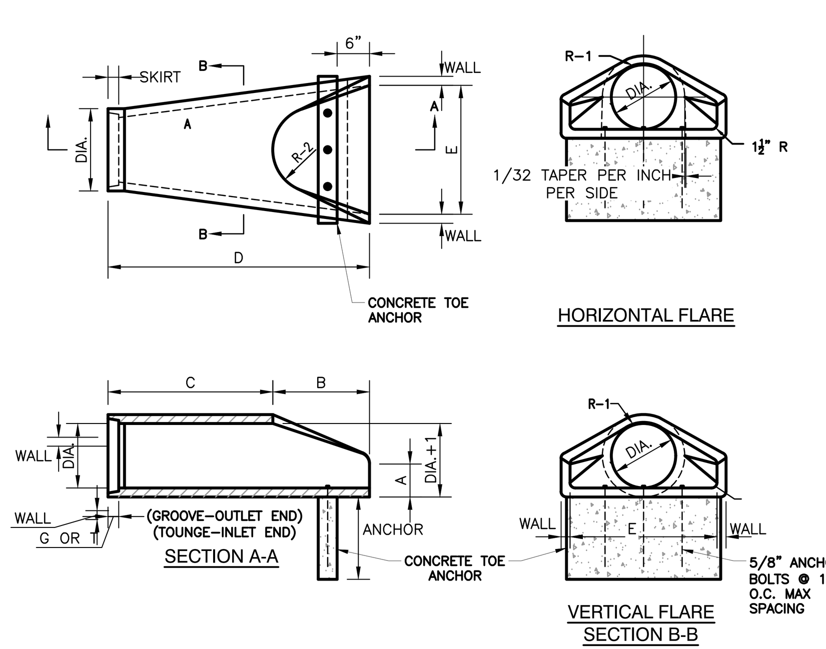

Dia.	Wall	G or T	Wt. Sec.	A	B	C	D	E	Dia.+1	R-1	R-2	Skirt	Anchor
12	2	1½	530	4	24	48⅞	72⅞	24	13	10 1/16	9	3½	24
15	21/4	2	740	6	27	46	73	30	16	12½	11	3½	24
18	2½	2½	990	9	27	46	73	36	19	15½	12	4	24
21	2¾	2¼	1280	9	35	38	73	42	22	16⅛	13	4	24
24	3	2½	1520	9½	43½	30	73½	48	25	16 11/16	14	4½	24
27	3¼	2½	1930	10½	48	25½	73½	54	28	17¾	14½	4½	24
30	3½	3	2190	12	54	19¾	73¾	60	31	18 5/16	15	5	24
33	3¾	3⅜	3150	13½	58½	39¼	97¾	66	34	23¾	17½	5½	24
36	4	3½	4100	15	63	34¾	97¾	72	37	24 1/16	20	5½	24
42	4½	3¾	5380	21	63	35	98	78	43	27¼	22	5½	24
48	5	4¼	6550	24	72	26	98	84	49	28⅛	22	5¾	36
54	5½	4¾	8040	27	65	35	100	90	55	32⅞	24	6¼	36
60	6	5	8750	30	60	39	99	96	61	36¾	24	6¾	36
66	6½	5½	10630	24	78	21	99	102	67	35 11/16	24	7¼	36
72	7	6	12520	34	78	21	99	108	73	38⅝	24	7¾	36
78	7½	6½	14430	24	78	21	99	114	79	41 15/16	24	8½	36
84	8	7	16350	24	78	21	99	120	85	44 13/16	24	9	36

NOTE:
1. MANUFACTURE OF END SECTION IS IN ACCORDANCE WITH APPLICABLE PORTIONS OF A.S.T.M. SPECIFICATION C76.

DETAIL 423 - PRECAST CONCRETE FLARED HEADWALLS
NOT TO SCALE

BCSC
TOGETHER WE LEARN

CSO
8831 Keystone Crossing, Indianapolis, IN 46240
317.848.7800 | csoinc.net

© 2018 CSO Architects, Inc. All Rights Reserved

Höweler+Yoon Architecture
617.517.4101 howeleryoon.com

CEC
Civil & Environmental Consultants, Inc.
530 E. Ohio Street · Suite G
Indianapolis, IN 46204
317-655-7777 · 877-746-0749
www.cecinc.com

PROJECT:
BARTHOLOMEW CONSOLIDATED SCHOOL CORPORATION
MAPLE GROVE ELEMENTARY SCHOOL

SCOPE DRAWINGS:
These drawings indicate the general scope of the project in terms of architectural design concept, the dimensions of the building, the major architectural elements and the type of structural, mechanical and electrical systems.
The drawings do not necessarily indicate or describe all work required for full performance and completion of the requirements of the Contract.
On the basis of the general scope indicated or described the trade contractors shall furnish all items required for the proper execution and completion of the work.

REVISIONS:
2 06/17/2025 - ADDENDUM #02

ISSUE DATE	DRAWN BY	CHECKED BY
05/30/25	BEB	JMP

DRAWING TITLE:
STORM DETAILS

CERTIFIED BY:
JONATHAN M. PASYK REGISTERED No. PE12100829 STATE OF INDIANA PROFESSIONAL ENGINEER
05/30/2025

Indiana 811
Know what's below. Call before you dig.

DRAWING NUMBER
C803

PROJECT NUMBER
2024022

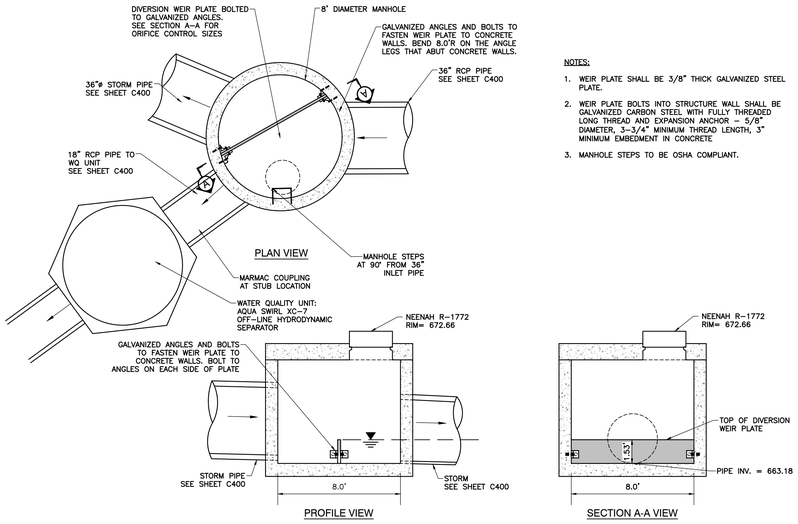

NOTES:

1. WEIR PLATE SHALL BE 3/8" THICK GALVANIZED STEEL PLATE.
2. WEIR PLATE BOLTS INTO STRUCTURE WALL SHALL BE GALVANIZED CARBON STEEL WITH FULLY THREADED LONG THREAD AND EXPANSION ANCHOR – 5/8" DIAMETER, 3–3/4" MINIMUM THREAD LENGTH, 3" MINIMUM EMBEDMENT IN CONCRETE
3. MANHOLE STEPS TO BE OSHA COMPLIANT.

DETAIL 431 - DIVERSION WEIR STR. 402

NOT TO SCALE

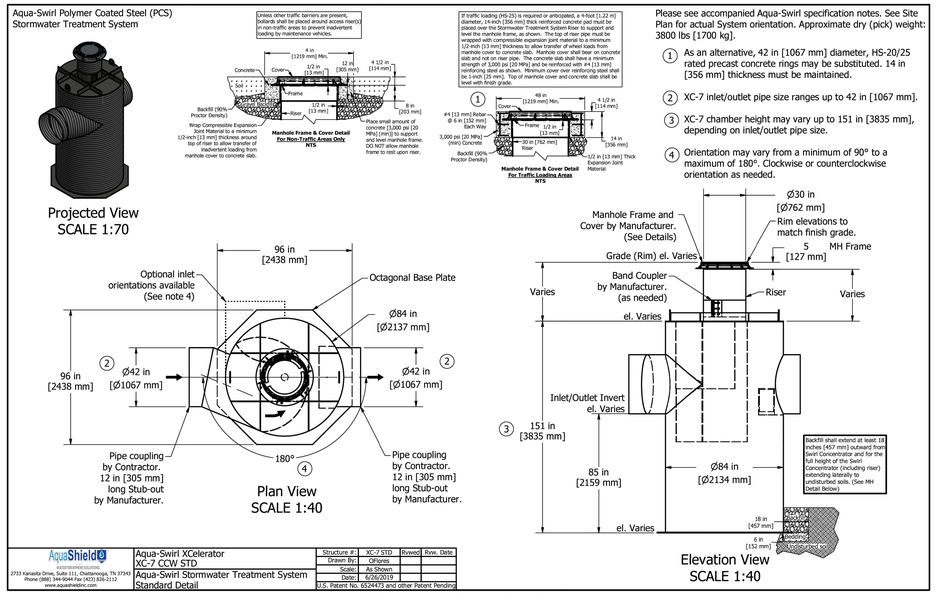

DETAIL 429 - AQUA SWIRL XC-7

NOT TO SCALE

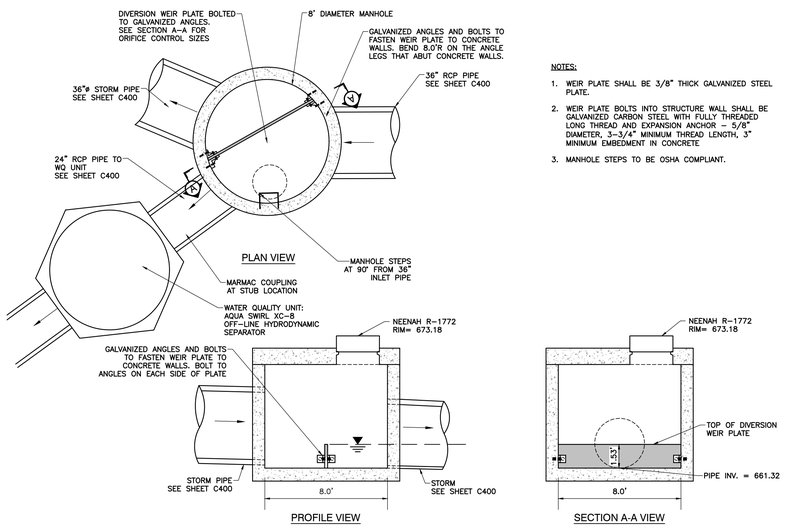

NOTES:

1. WEIR PLATE SHALL BE 3/8" THICK GALVANIZED STEEL PLATE.
2. WEIR PLATE BOLTS INTO STRUCTURE WALL SHALL BE GALVANIZED CARBON STEEL WITH FULLY THREADED LONG THREAD AND EXPANSION ANCHOR – 5/8" DIAMETER, 3–3/4" MINIMUM THREAD LENGTH, 3" MINIMUM EMBEDMENT IN CONCRETE
3. MANHOLE STEPS TO BE OSHA COMPLIANT.

DETAIL 432 - DIVERSION WEIR STR. 240

NOT TO SCALE

2

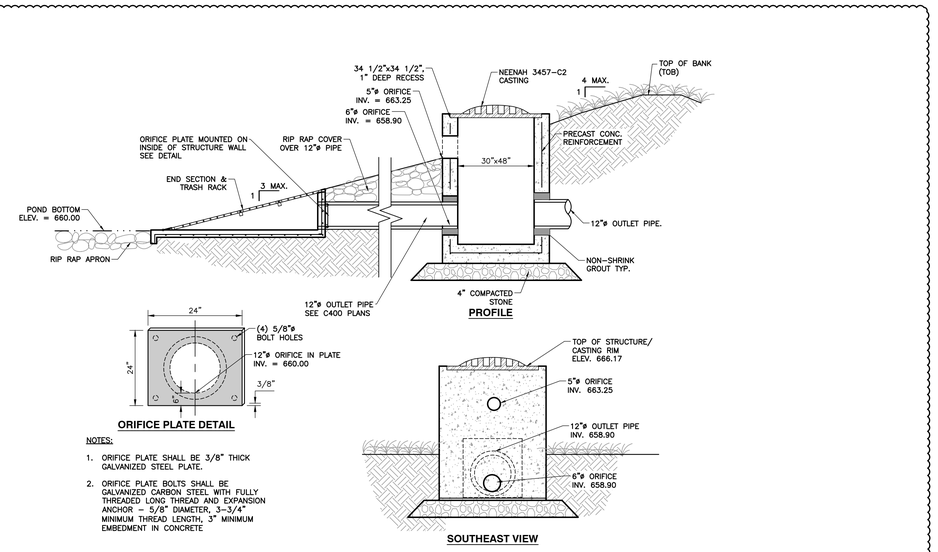

NOTES:

1. ORIFICE PLATE SHALL BE 3/8" THICK GALVANIZED STEEL PLATE.
2. ORIFICE PLATE BOLTS SHALL BE GALVANIZED CARBON STEEL WITH FULLY THREADED LONG THREAD AND EXPANSION ANCHOR – 5/8" DIAMETER, 3–3/4" MINIMUM THREAD LENGTH, 3" MINIMUM EMBEDMENT IN CONCRETE

DETAIL 433 - OUTLET CONTROL STRUCTURE STR.101

NOT TO SCALE

2

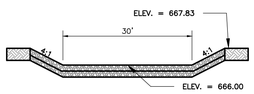

DETAIL 434 - EMERGENCY OVERFLOW WEIR

NOT TO SCALE

BCSC TOGETHER WE LEARN

CSO
8831 Keystone Crossing, Indianapolis, IN 46240
317.848.7800 | csoinc.net

© 2018 CSO Architects, Inc. All Rights Reserved

Höweler+Yoon Architecture
617.517.4101 howeleryoon.com

Civil & Environmental Consultants, Inc.
530 E. Ohio Street · Suite G
Indianapolis, IN 46204
317-655-7777 · 877-746-0749
www.ceciinc.com

PROJECT:
BARTHOLOMEW CONSOLIDATED SCHOOL CORPORATION
MAPLE GROVE ELEMENTARY SCHOOL

SCOPE DRAWINGS:
These drawings indicate the general scope of the project. In terms of architectural work, they indicate the general nature of the building, the major architectural elements and the type of structural, mechanical and electrical systems. They do not necessarily indicate or describe all work required for full performance and completion of the requirements of the Contract.
On the basis of the general scope indicated or described, the trade contractors shall furnish all items required for the proper execution and completion of the work.

REVISIONS:
2 06/17/2025 - ADDENDUM #02

ISSUE DATE	DRAWN BY	CHECKED BY
05/30/25	BEB	JMP

DRAWING TITLE:
STORM DETAILS

CERTIFIED BY:
JONATHAN M. PAYNE REGISTERED No. PE12100829 STATE OF INDIANA PROFESSIONAL ENGINEER
05/30/2025

DRAWING NUMBER
C804

PROJECT NUMBER
2024022

Indiana 811 Know what's below. Call before you dig.

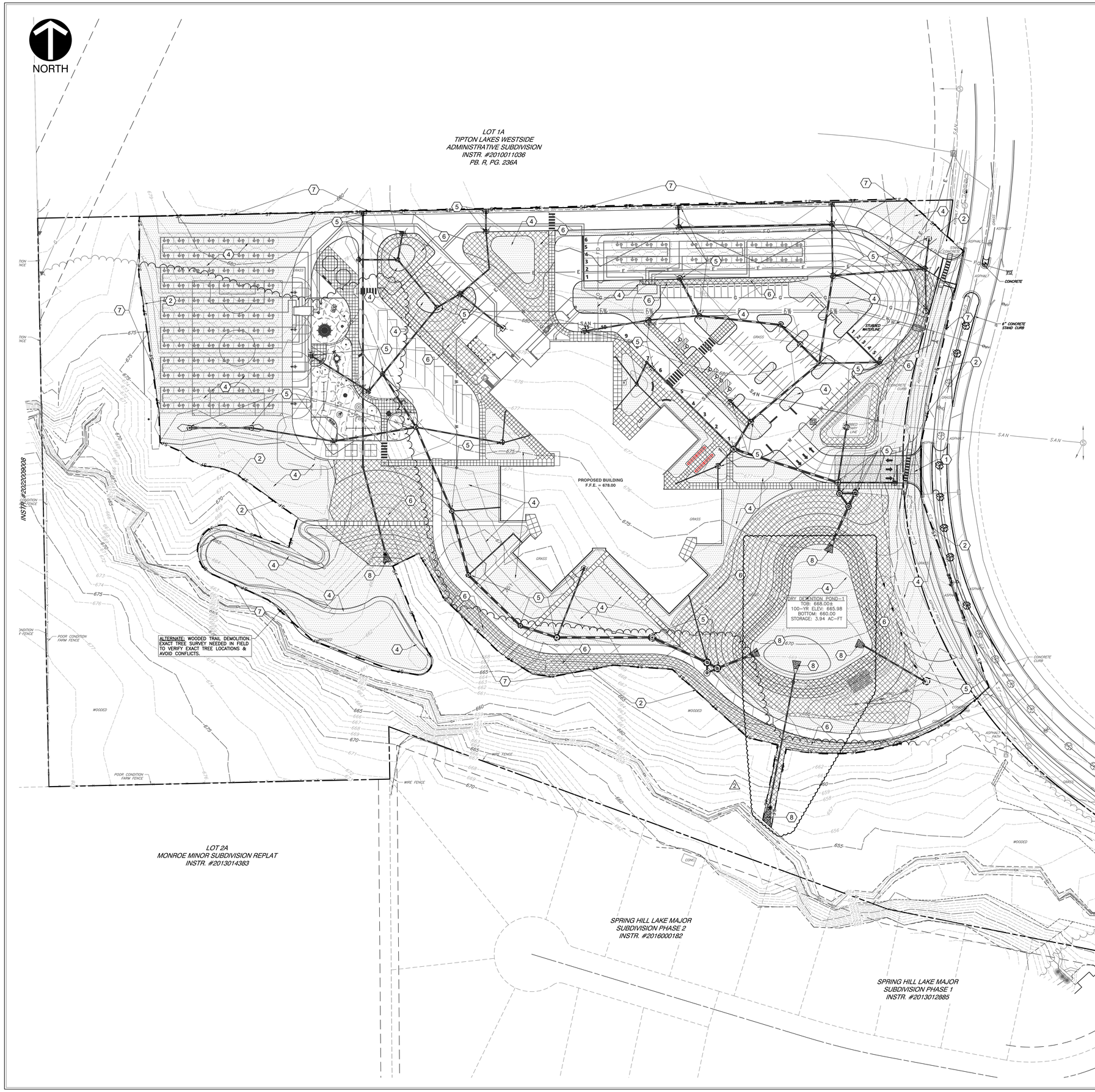

NOTE: ALL WORK WITHIN THE RIGHT-OF-WAY SHALL MEET CURRENT CITY OF COLUMBUS CONSTRUCTION STANDARDS.

NOTE: THE CONTRACTOR/DEVELOPER SHALL PROTECT EXISTING RIGHT-OF-WAY INFRASTRUCTURE AND BE RESPONSIBLE FOR RESTORATION, AS NECESSARY.

GENERAL EROSION CONTROL NOTES:

1. CONTRACTOR SHALL INSTALL ALL REQUIRED SILT FENCES, SILT TRAPS, TREE PROTECTION AND INLET PROTECTION FOR EXISTING INLETS PRIOR TO THE START OF ANY EARTH MOVING OR STRIPPING.
2. CONTRACTOR SHALL INSTALL A STONE CONSTRUCTION ENTRANCE OR SOME OTHER DEVICE PRIOR TO THE START OF EARTHWORK AS NECESSARY TO PREVENT SOIL FROM BEING TRACKED OR WASHED INTO EXISTING ROADWAYS.
3. LAND ALTERATIONS WHICH STRIP THE LAND OF VEGETATION, INCLUDING REGRADING, SHALL BE DONE IN A WAY THAT WILL MINIMIZE EROSION. WHENEVER FEASIBLE, NATURAL VEGETATION SHALL BE RETAINED AND PROTECTED. AS GRADING IS DONE, INSTALL SILT TRAPS, SILT FENCES, SLOPE DRAINS, TEMPORARY DIVERSIONS AND OTHER RUNOFF CONTROL MEASURES AT APPROPRIATE LOCATIONS TO KEEP SEDIMENT CONTAINED ON SITE.
4. ALL DISTURBED AREAS SHALL BE SEEDED AND STRAW MULCHED AS SHOWN ON THE PLANS IMMEDIATELY AFTER COMPLETION OF GROUND ACTIVITY. FOR LARGE PROJECTS, THIS SEEDING SHOULD BE COMPLETED IN PHASES AS THE DIFFERENT AREAS OF THE SITE ARE COMPLETED.
5. PERMANENT AND FINAL VEGETATION OR STRUCTURAL EROSION CONTROL DEVICES SHALL BE INSTALLED AS SOON AS PRACTICAL UNDER THE CIRCUMSTANCES.
6. THE DURATION OF TIME WHICH AN AREA REMAINS EXPOSED SHALL BE KEPT TO A PRACTICAL MINIMUM DEPENDING UPON THE WEATHER. IF CONSTRUCTION ACTIVITY IS TO CEASE FOR MORE THAN TWO WEEKS, THE DISTURBED AREAS SHALL BE TEMPORARILY SEEDED.
7. ALL STORM SEWER INLET PROTECTION DEVICES SHALL BE PUT IN PLACE AT THE TIME EACH INLET IS CONSTRUCTED.
8. THE CONTRACTOR SHALL MAINTAIN EROSION CONTROL MEASURES AND DEVICES DURING CONSTRUCTION AND UNTIL SILTATION OF THE STREETS AND STORM SEWERS WILL NO LONGER OCCUR.
9. ONCE ONSITE EROSION AND SILTATION OF THE STREETS AND STORM SEWERS WILL NO LONGER OCCUR, THE CONTRACTOR SHALL REMOVE AND DISPOSE OF THE TEMPORARY EROSION CONTROL DEVICES.
10. THESE GENERAL PROCEDURES MAY NOT COVER ALL SITUATIONS. REFER TO EROSION CONTROL PLANS FOR SPECIFIC NOTES AND ADDITIONAL DETAILS
11. EROSION CONTROL TO COMPLY WITH THE INDIANA CONSTRUCTION STORMWATER GENERAL PERMIT (CSGP), AND INDIANA STORMWATER QUALITY HANDBOOK.
12. ADDITIONAL EROSION CONTROL MEASURES MAY BE REQUIRED IN THE FIELD BY THE INSPECTOR.
13. ALL EROSION CONTROL PRACTICES SHALL BE IN ACCORDANCE WITH THE IDNR INDIANA HANDBOOK FOR EROSION CONTROL IN DEVELOPING AREAS: DATED OCTOBER 1992 AND THE SCS FIELD OFFICE TECHNICAL GUIDE.
14. STABILIZATION SHALL BE INITIATED BY THE END OF THE SEVENTH (7TH) DAY THE AREA WAS LEFT IDLE. STABILIZATION MUST BE COMPLETED WITHIN FOURTEEN (14) DAYS AFTER INITIATION.

PROPOSED LEGEND:

- PROPOSED GRAVEL CONSTRUCTION ENTRANCE
- PROPOSED EROSION CONTROL BLANKET
- PROPOSED RIPRAP
- PERMANENT/TEMPORARY SEEDING AREAS
- PROPOSED LIMITS OF DISTURBANCE
- SF — PROPOSED SILT FENCE
- PROPOSED DITCH
- PROPOSED INLET PROTECTION
- MAJOR STORMWATER DISCHARGE POINT
- PROPOSED CONCRETE WASHOUT
- ROCK DOUGHNUT INLET PROTECTION

EROSION CONTROL ITEMS:

1. CONSTRUCTION ENTRANCE; REFER TO DETAIL 901 ON SHEET C904.
2. TEMPORARY SILT FENCE; REFER TO DETAIL903 ON SHEET C904.
3. CONCRETE WASHOUT STATION; REFER TO DETAIL 902 ON SHEET C904.
4. PERMANENT/TEMPORARY SEEDING AREAS; REFER TO DETAIL ON SHEET C904.
5. INLET PROTECTION; REFER TO DETAIL 905 ON SHEET C904.
6. EROSION CONTROL BLANKET AND SEEDING; REFER TO DETAIL 904 ON SHEET C904.
7. LIMITS OF CONSTRUCTION.
8. RIPRAP APRON; REFER TO DETAIL 909 ON SHEET C904. (2)

EROSION CONTROL RESPONSIBLE PERSON

THE PERSON RESPONSIBLE FOR THE INSTALLATION AND MAINTENANCE OF THE EROSION CONTROL IS LISTED BELOW.

RESPONSIBLE REPRESENTATIVE:
BARTHOLOMEW CONSOLIDATED SCHOOL CORPORATION
BRETT BOEZEMAN, DIRECTOR OF OPERATIONS
1260 N. MARR ROAD
COLUMBUS, IN 47201
PH: (812) 376-4231
boezemanb@bcsc.k12.in.us

SCALE IN FEET
0 50' 100'

Indiana811
Know what's below. Call before you dig.

BCSC TOGETHER WE LEARN

CSO
8831 Keystone Crossing, Indianapolis, IN 46240
317.848.7800 | csoinc.net
© 2018 CSO Architects, Inc. All Rights Reserved

Höweler+Yoon Architecture
617.517.4101 howelleryoon.com

CEC
Civil & Environmental Consultants, Inc.
530 E. Ohio Street · Suite G
Indianapolis, IN 46204
317-655-7777 · 877-746-0749
www.ceciinc.com

PROJECT:
BARTHOLOMEW CONSOLIDATED SCHOOL CORPORATION
MAPLE GROVE ELEMENTARY SCHOOL

SCOPE DRAWINGS:
These drawings indicate the general scope of the project in terms of architectural design concept; the dimensions of the building, the major architectural elements and the type of structural, mechanical and electrical systems. The Contract Documents are intended to describe all work required for full performance and completion of the requirements of the Contract.
On the basis of the general scope indicated or described the trade contractors shall furnish all items required for the proper execution and completion of the work.

REVISIONS:
1 06/10/2025 - ADDENDUM #01
2 06/17/2025 - ADDENDUM #02

ISSUE DATE	DRAWN BY	CHECKED BY
05/30/25	BEB	JMP

DRAWING TITLE:
STORMWATER POLLUTION PREVENTION PLAN - OVERALL

CERTIFIED BY:
JONATHAN M. PAPE REGISTERED No. PE12100829 STATE OF INDIANA PROFESSIONAL ENGINEER
05/30/2025

DRAWING NUMBER
C900

PROJECT NUMBER
2024022

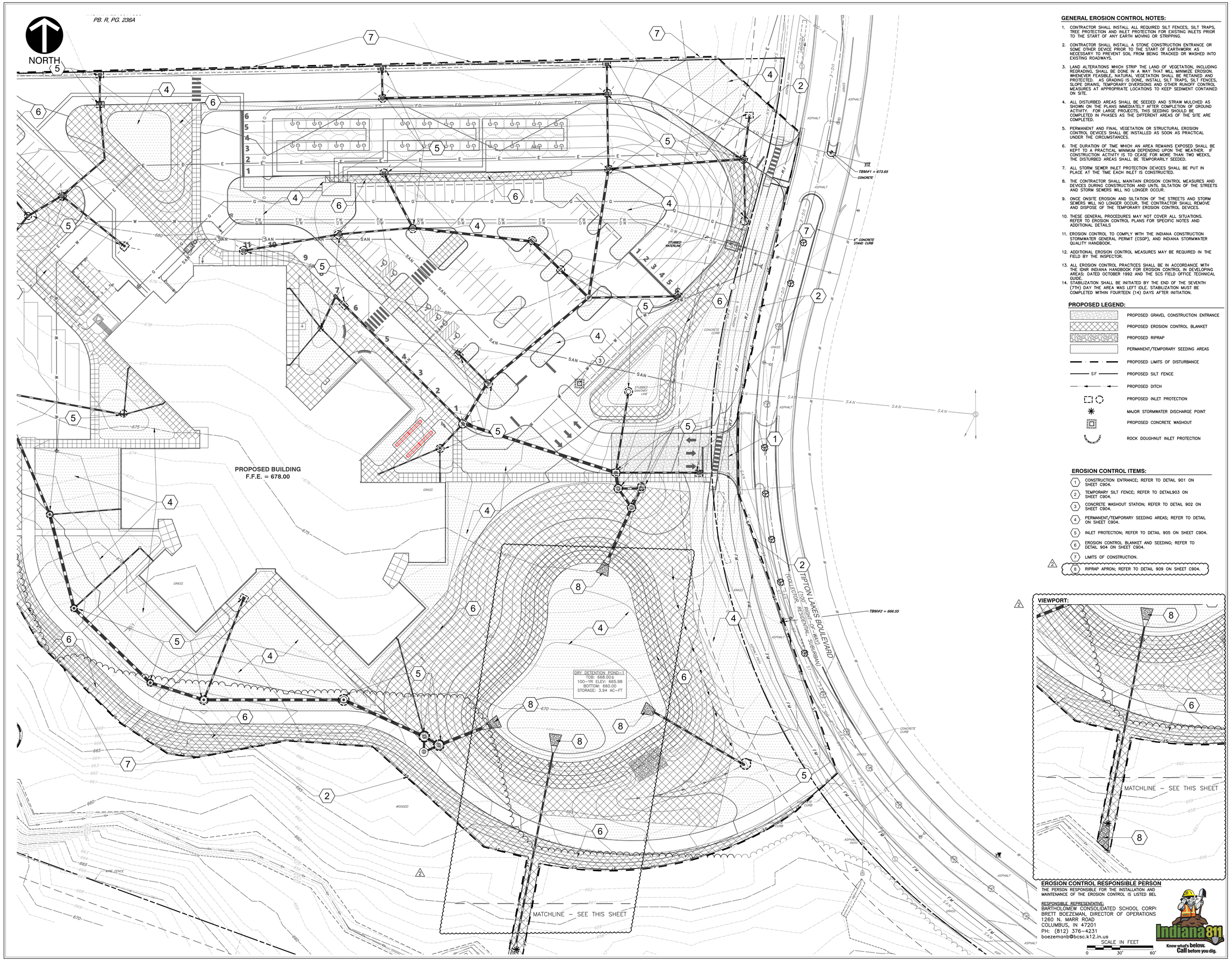

GENERAL EROSION CONTROL NOTES:

1. CONTRACTOR SHALL INSTALL ALL REQUIRED SILT FENCES, SILT TRAPS, TREE PROTECTION AND INLET PROTECTION FOR EXISTING INLETS PRIOR TO THE START OF ANY EARTH MOVING OR STRIPPING.
2. CONTRACTOR SHALL INSTALL A STONE CONSTRUCTION ENTRANCE OR SOME OTHER DEVICE PRIOR TO THE START OF EARTHWORK AS NECESSARY TO PREVENT SOIL FROM BEING TRACKED OR WASHED INTO EXISTING ROADWAYS.
3. LAND ALTERATIONS WHICH STRIP THE LAND OF VEGETATION, INCLUDING REGRADING, SHALL BE DONE IN A WAY THAT WILL MINIMIZE EROSION. WHENEVER FEASIBLE, NATURAL VEGETATION SHALL BE RETAINED AND PROTECTED. AS GRADING IS DONE, INSTALL SILT TRAPS, SILT FENCES, SLOPE DRAINS, TEMPORARY DIVERSIONS AND OTHER RUNOFF CONTROL MEASURES AT APPROPRIATE LOCATIONS TO KEEP SEDIMENT CONTAINED ON SITE.
4. ALL DISTURBED AREAS SHALL BE SEEDED AND STRAW MULCHED AS SHOWN ON THE PLANS IMMEDIATELY AFTER COMPLETION OF GROUND ACTIVITY. FOR LARGE PROJECTS, THIS SEEDING SHOULD BE COMPLETED IN PHASES AS THE DIFFERENT AREAS OF THE SITE ARE COMPLETED.
5. PERMANENT AND FINAL VEGETATION OR STRUCTURAL EROSION CONTROL DEVICES SHALL BE INSTALLED AS SOON AS PRACTICAL UNDER THE CIRCUMSTANCES.
6. THE DURATION OF TIME WHICH AN AREA REMAINS EXPOSED SHALL BE KEPT TO A PRACTICAL MINIMUM DEPENDING UPON THE WEATHER. IF CONSTRUCTION ACTIVITY IS TO CEASE FOR MORE THAN TWO WEEKS, THE DISTURBED AREAS SHALL BE TEMPORARILY SEEDED.
7. ALL STORM SEWER INLET PROTECTION DEVICES SHALL BE PUT IN PLACE AT THE TIME EACH INLET IS CONSTRUCTED.
8. THE CONTRACTOR SHALL MAINTAIN EROSION CONTROL MEASURES AND DEVICES DURING CONSTRUCTION AND UNTIL SILTATION OF THE STREETS AND STORM SEWERS WILL NO LONGER OCCUR.
9. ONCE ONSITE EROSION AND SILTATION OF THE STREETS AND STORM SEWERS WILL NO LONGER OCCUR, THE CONTRACTOR SHALL REMOVE AND DISPOSE OF THE TEMPORARY EROSION CONTROL DEVICES.
10. THESE GENERAL PROCEDURES MAY NOT COVER ALL SITUATIONS. REFER TO EROSION CONTROL PLANS FOR SPECIFIC NOTES AND ADDITIONAL DETAILS
11. EROSION CONTROL TO COMPLY WITH THE INDIANA CONSTRUCTION STORMWATER GENERAL PERMIT (CSGP), AND INDIANA STORMWATER QUALITY HANDBOOK.
12. ADDITIONAL EROSION CONTROL MEASURES MAY BE REQUIRED IN THE FIELD BY THE INSPECTOR.
13. ALL EROSION CONTROL PRACTICES SHALL BE IN ACCORDANCE WITH THE IDNR INDIANA HANDBOOK FOR EROSION CONTROL IN DEVELOPING AREAS: DATED OCTOBER 1992 AND THE SCS FIELD OFFICE TECHNICAL GUIDE.
14. STABILIZATION SHALL BE INITIATED BY THE END OF THE SEVENTH (7TH) DAY THE AREA WAS LEFT IDLE. STABILIZATION MUST BE COMPLETED WITHIN FOURTEEN (14) DAYS AFTER INITIATION.

PROPOSED LEGEND:

- PROPOSED GRAVEL CONSTRUCTION ENTRANCE
- PROPOSED EROSION CONTROL BLANKET
- PROPOSED RIPRAP
- PERMANENT/TEMPORARY SEEDING AREAS
- PROPOSED LIMITS OF DISTURBANCE
- SF — PROPOSED SILT FENCE
- PROPOSED DITCH
- PROPOSED INLET PROTECTION
- MAJOR STORMWATER DISCHARGE POINT
- PROPOSED CONCRETE WASHOUT
- ROCK DOUGHNUT INLET PROTECTION

EROSION CONTROL ITEMS:

1. CONSTRUCTION ENTRANCE; REFER TO DETAIL 901 ON SHEET C904.
2. TEMPORARY SILT FENCE; REFER TO DETAIL903 ON SHEET C904.
3. CONCRETE WASHOUT STATION; REFER TO DETAIL 902 ON SHEET C904.
4. PERMANENT/TEMPORARY SEEDING AREAS; REFER TO DETAIL ON SHEET C904.
5. INLET PROTECTION; REFER TO DETAIL 905 ON SHEET C904.
6. EROSION CONTROL BLANKET AND SEEDING; REFER TO DETAIL 904 ON SHEET C904.
7. LIMITS OF CONSTRUCTION.
8. RIPRAP APRON; REFER TO DETAIL 909 ON SHEET C904.

EROSION CONTROL RESPONSIBLE PERSON

THE PERSON RESPONSIBLE FOR THE INSTALLATION AND MAINTENANCE OF THE EROSION CONTROL IS LISTED BEL

RESPONSIBLE REPRESENTATIVE:
BARTHOLOMEW CONSOLIDATED SCHOOL CORPO
BRETT BOEZEMAN, DIRECTOR OF OPERATIONS
1260 N. MARR ROAD
COLUMBUS, IN 47201
PH: (812) 376-4231
boezemanb@bcsc.k12.in.us

SCALE IN FEET
0 30' 60'

Indiana 811
Know what's below. Call before you dig.

BCSC TOGETHER WE LEARN

CSO
8831 Keystone Crossing, Indianapolis, IN 46240
317.848.7800 | csoinc.net
© 2018 CSO Architects, Inc. All Rights Reserved

Höweler+Yoon Architecture
617.517.4101 howelleryoon.com

CEC
Civil & Environmental Consultants, Inc.
530 E. Ohio Street · Suite G
Indianapolis, IN 46204
317-655-7777 · 877-746-0749
www.cecinc.com

PROJECT:
BARTHOLOMEW CONSOLIDATED SCHOOL CORPORATION
MAPLE GROVE ELEMENTARY SCHOOL

SCOPE DRAWINGS:
These drawings are a pictorial representation of the project in terms of architectural design concept, the dimensions of the building, the major architectural elements and the type of structural, mechanical and electrical systems.
The drawings do not necessarily indicate or describe all materials, labor, equipment, incidentals and completion of the requirements of the Contract.
On the basis of the general scope indicated or described, the trade contractors shall furnish all items required for the proper execution and completion of the work.

REVISIONS:
2 06/17/2025 - ADDENDUM #02

ISSUE DATE	DRAWN BY	CHECKED BY
05/30/25	BEB	JMP

DRAWING TITLE:
STORMWATER POLLUTION PREVENTION PLAN - EAST

CERTIFIED BY:
JONATHAN M. JASYK
REGISTERED
No. PE12100829
STATE OF INDIANA
PROFESSIONAL ENGINEER
05/30/2025

DRAWING NUMBER
C901

PROJECT NUMBER
2024022

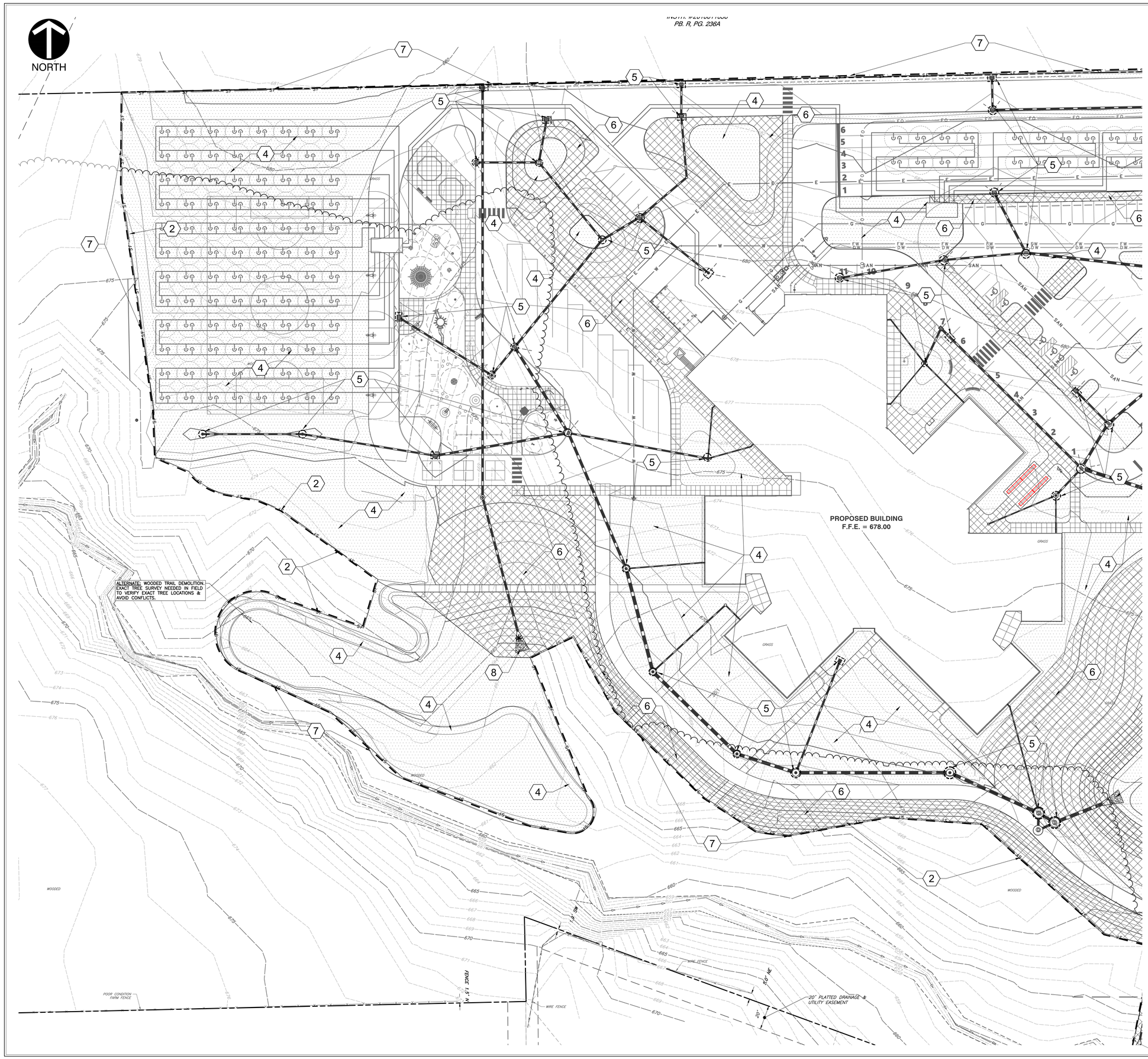

GENERAL EROSION CONTROL NOTES:

1. CONTRACTOR SHALL INSTALL ALL REQUIRED SILT FENCES, SILT TRAPS, TREE PROTECTION AND INLET PROTECTION FOR EXISTING INLETS PRIOR TO THE START OF ANY EARTH MOVING OR STRIPPING.
2. CONTRACTOR SHALL INSTALL A STONE CONSTRUCTION ENTRANCE OR SOME OTHER DEVICE PRIOR TO THE START OF EARTHWORK AS NECESSARY TO PREVENT SOIL FROM BEING TRACKED OR WASHED INTO EXISTING ROADWAYS.
3. LAND ALTERATIONS WHICH STRIP THE LAND OF VEGETATION, INCLUDING REGRADING, SHALL BE DONE IN A WAY THAT WILL MINIMIZE EROSION. WHENEVER FEASIBLE, NATURAL VEGETATION SHALL BE RETAINED AND PROTECTED. AS GRADING IS DONE, INSTALL SILT TRAPS, SILT FENCES, SLOPE DRAINS, TEMPORARY DIVERSIONS AND OTHER RUNOFF CONTROL MEASURES AT APPROPRIATE LOCATIONS TO KEEP SEDIMENT CONTAINED ON SITE.
4. ALL DISTURBED AREAS SHALL BE SEEDED AND STRAW MULCHED AS SHOWN ON THE PLANS IMMEDIATELY AFTER COMPLETION OF GROUND ACTIVITY. FOR LARGE PROJECTS, THIS SEEDING SHOULD BE COMPLETED IN PHASES AS THE DIFFERENT AREAS OF THE SITE ARE COMPLETED.
5. PERMANENT AND FINAL VEGETATION OR STRUCTURAL EROSION CONTROL DEVICES SHALL BE INSTALLED AS SOON AS PRACTICAL UNDER THE CIRCUMSTANCES.
6. THE DURATION OF TIME WHICH AN AREA REMAINS EXPOSED SHALL BE KEPT TO A PRACTICAL MINIMUM DEPENDING UPON THE WEATHER. IF CONSTRUCTION ACTIVITY IS TO CEASE FOR MORE THAN TWO WEEKS, THE DISTURBED AREAS SHALL BE TEMPORARILY SEEDED.
7. ALL STORM SEWER INLET PROTECTION DEVICES SHALL BE PUT IN PLACE AT THE TIME EACH INLET IS CONSTRUCTED.
8. THE CONTRACTOR SHALL MAINTAIN EROSION CONTROL MEASURES AND DEVICES DURING CONSTRUCTION AND UNTIL SILTATION OF THE STREETS AND STORM SEWERS WILL NO LONGER OCCUR.
9. ONCE ONSITE EROSION AND SILTATION OF THE STREETS AND STORM SEWERS WILL NO LONGER OCCUR, THE CONTRACTOR SHALL REMOVE AND DISPOSE OF THE TEMPORARY EROSION CONTROL DEVICES.
10. THESE GENERAL PROCEDURES MAY NOT COVER ALL SITUATIONS. REFER TO EROSION CONTROL PLANS FOR SPECIFIC NOTES AND ADDITIONAL DETAILS
11. EROSION CONTROL TO COMPLY WITH THE INDIANA CONSTRUCTION STORMWATER GENERAL PERMIT (CSGP), AND INDIANA STORMWATER QUALITY HANDBOOK.
12. ADDITIONAL EROSION CONTROL MEASURES MAY BE REQUIRED IN THE FIELD BY THE INSPECTOR.
13. ALL EROSION CONTROL PRACTICES SHALL BE IN ACCORDANCE WITH THE IDNR INDIANA HANDBOOK FOR EROSION CONTROL IN DEVELOPING AREAS: DATED OCTOBER 1992 AND THE SCS FIELD OFFICE TECHNICAL GUIDE.
14. STABILIZATION SHALL BE INITIATED BY THE END OF THE SEVENTH (7TH) DAY THE AREA WAS LEFT IDLE. STABILIZATION MUST BE COMPLETED WITHIN FOURTEEN (14) DAYS AFTER INITIATION.

PROPOSED LEGEND:

- PROPOSED GRAVEL CONSTRUCTION ENTRANCE
- PROPOSED EROSION CONTROL BLANKET
- PROPOSED RIPRAP
- PERMANENT/TEMPORARY SEEDING AREAS
- PROPOSED LIMITS OF DISTURBANCE
- SF — PROPOSED SILT FENCE
- PROPOSED DITCH
- PROPOSED INLET PROTECTION
- MAJOR STORMWATER DISCHARGE POINT
- PROPOSED CONCRETE WASHOUT
- ROCK DOUGHNUT INLET PROTECTION

EROSION CONTROL ITEMS:

1. CONSTRUCTION ENTRANCE; REFER TO DETAIL 901 ON SHEET C904.
2. TEMPORARY SILT FENCE; REFER TO DETAIL903 ON SHEET C904.
3. CONCRETE WASHOUT STATION; REFER TO DETAIL 902 ON SHEET C904.
4. PERMANENT/TEMPORARY SEEDING AREAS; REFER TO DETAIL ON SHEET C904.
5. INLET PROTECTION; REFER TO DETAIL 905 ON SHEET C904.
6. EROSION CONTROL BLANKET AND SEEDING; REFER TO DETAIL 904 ON SHEET C904.
7. LIMITS OF CONSTRUCTION.
8. RIPRAP APRON; REFER TO DETAIL 909 ON SHEET C904. (2)

EROSION CONTROL RESPONSIBLE PERSON

THE PERSON RESPONSIBLE FOR THE INSTALLATION AND MAINTENANCE OF THE EROSION CONTROL IS LISTED BELOW.

RESPONSIBLE REPRESENTATIVE:
BARTHOLOMEW CONSOLIDATED SCHOOL CORPORATION
BRETT BOEZEMAN, DIRECTOR OF OPERATIONS
1260 N. MARR ROAD
COLUMBUS, IN 47201
PH: (812) 376-4231
boezemanb@bcsc.k12.in.us

SCALE IN FEET
0 30' 60'

Indiana 811
Know what's below. Call before you dig.

BCSC TOGETHER WE LEARN

CSO
8831 Keystone Crossing, Indianapolis, IN 46240
317.848.7800 | csoinc.net
© 2018 CSO Architects, Inc. All Rights Reserved

Höweler+Yoon Architecture
617.517.4101 howeleryoon.com

Civil & Environmental Consultants, Inc.
530 E. Ohio Street · Suite G
Indianapolis, IN 46204
317-655-7777 · 877-746-0749
www.ceciinc.com

PROJECT:
BARTHOLOMEW CONSOLIDATED SCHOOL CORPORATION
MAPLE GROVE ELEMENTARY SCHOOL

SCOPE DRAWINGS:
These drawings indicate the general scope of the project in terms of architectural design concept, the dimensions of the building, the major architectural elements and the type of structural, mechanical and electrical systems. The specifications and these drawings shall describe all work required for full performance and completion of the requirements of the Contract.
On the basis of the general scope indicated or described the trade contractors shall furnish all items required for the proper execution and completion of the work.

REVISIONS:
1 06/10/2025 - ADDENDUM #01
2 06/17/2025 - ADDENDUM #02

ISSUE DATE	DRAWN BY	CHECKED BY
05/30/25	BEB	JMP

DRAWING TITLE:
STORMWATER POLLUTION PREVENTION PLAN - WEST

CERTIFIED BY:
JONATHAN M. PARYS REGISTERED No. PE12100829 STATE OF INDIANA PROFESSIONAL ENGINEER
05/30/2025

DRAWING NUMBER
C902

PROJECT NUMBER
2024022

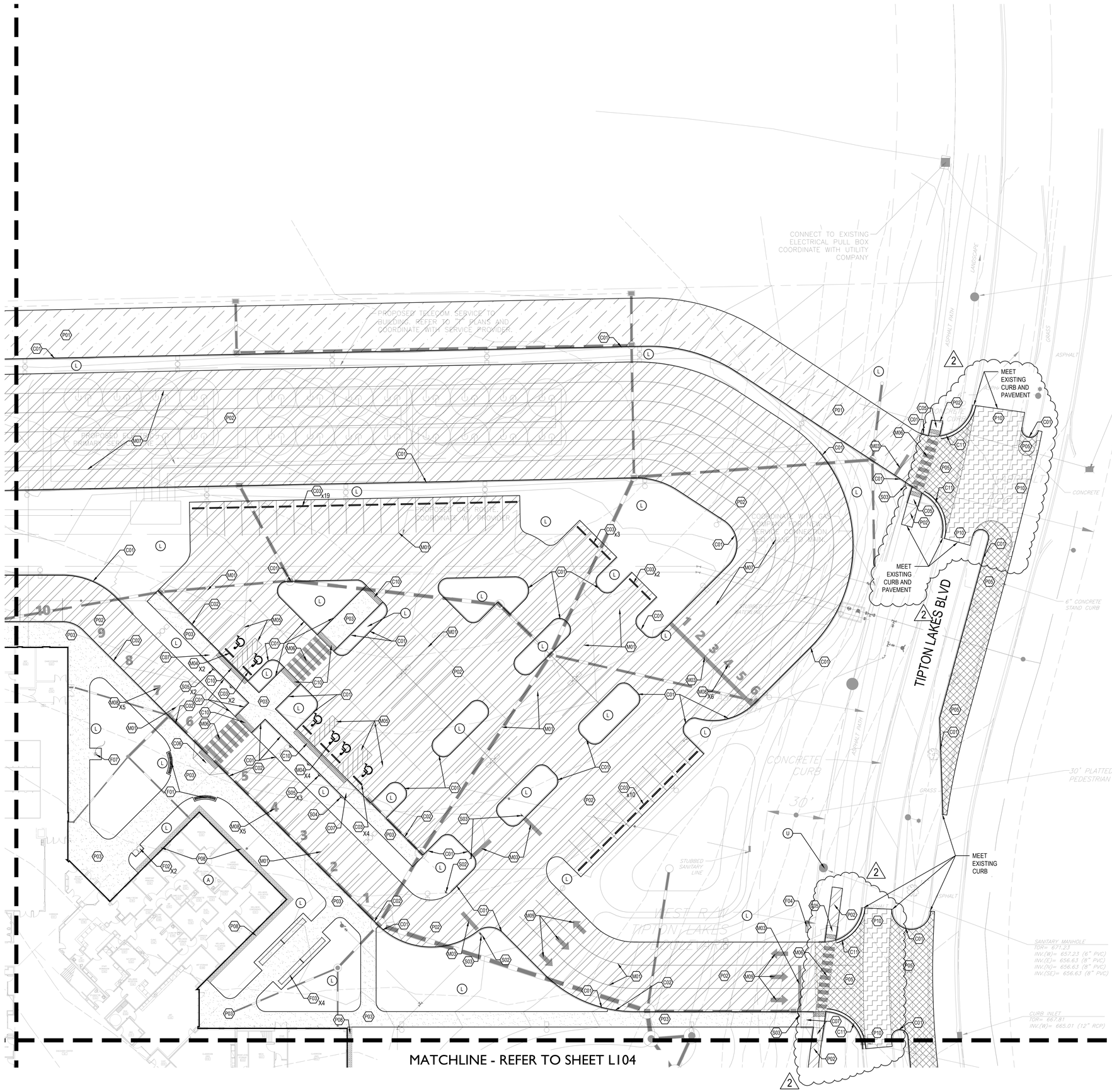

	REFERENCE KEYNOTES
KEY	DESCRIPTION / REFERENCE
A	ARCHITECTURAL FEATURE REFER TO ARCHITECTURAL SHEETS
L	LANDSCAPE OR PLANTED AREA REFER TO L400 SERIES
U	UTILITY FEATURE REFER TO CIVIL SERIES

	CURB AND RAMP KEYNOTES
KEY	DESCRIPTION
C01	CONCRETE POST CURB REFER TO SITE DETAIL 8/L600
C02	INTEGRAL CONCRETE CURB & WALK REFER TO SITE DETAIL 7/L600
C03	WHEEL STOP REFER TO SITE DETAIL 9/L600
C04	CURB RAMP, PARALLEL REFER TO SITE DETAIL 1/L601
C05	CURB RAMP, STRAIGHT REFER TO SITE DETAIL 2/L601
C06	CURB RAMP, DOUBLE FLARE REFER TO SITE DETAIL 3/L601
C07	CURB RAMP, DEPRESSED REFER TO SITE DETAIL 4/L601
C08	PLAY SURFACING PERIMETER CURB REFER TO SITE DETAIL 4/L602
C09	PLAY SURFACING PERIMETER INTEGRAL CURB AND WALK, REFER TO SITE DETAIL 2/L602
C10	DETECTABLE WARNING SURFACE REFER TO SPECIFICATIONS
C11	COMBINED CURB AND GUTTER REFER TO CITY STANDARDS
C12	SLOPED CONCRETE CURB REFER TO SITE DETAIL 10/L600
C13	CURB TRANSITION REFER TO SITE DETAIL 11/L600

	SITE FURNISHINGS KEYNOTES
KEY	DESCRIPTION
F01	BENCH REFER TO SPECIFICATION 32 33 00
F02	TRASH RECEPTACLE REFER TO SPECIFICATION 32 33 00
F03	BIKE RACK REFER TO SPECIFICATION 32 33 00
F05	ENTRANCE SIGN BY OTHERS
F06	28' BARRIER GATE REFER TO SPECIFICATIONS
F07	HALF COURT BASKETBALL REFER TO SITE DETAIL 5/L602
F07	FLAG POLE REFER TO SPECIFICATIONS
F08	STEEL PIPE BOLLARD REFER TO SITE DETAIL 7/L602
F09	STEEL PIPE BOLLARD WITH SLIP-OVER COVER REFER TO SITE DETAIL 7/L602
F10	COLLAPSIBLE BOLLARD REFER TO SPECIFICATION 32 33 00

	STRIPING KEYNOTES REFER TO SPECIFICATION 32 17 23
KEY	DESCRIPTION / REFERENCE
M01	VEHICULAR STRIPING, WHITE REFER TO SPECIFICATIONS
M02	BUS STRIPING, WHITE REFER SPECIFICATIONS
M03	STOP BAR, WHITE REFER TO SPECIFICATIONS
M04	ADA PARKING SYMBOL, BLUE REFER TO SITE DETAIL 6/L601 AND SPECIFICATIONS
M05	ADA PARKING STRIPING, BLUE REFER TO SITE DETAIL 6/L601 AND SPECIFICATIONS
M06	CROSSWALK STRIPING, WHITE REFER TO SITE DETAIL 5/L601 AND SPECIFICATIONS
M07	PICK-UP / DROP-OFF STACKING LANES, WHITE REFER TO SPECIFICATIONS
M08	PICK-UP / DROP-OFF STACKING LANE NUMBERS, WHITE, REFER TO SPECIFICATIONS
M09	DIRECTIONAL ARROWS, WHITE, REFER TO SPECIFICATIONS

	PAVEMENT KEYNOTES
KEY	DESCRIPTION
P01	HEAVY DUTY ASPHALT PAVEMENT REFER TO SITE DETAIL 1/L600 AND SPECIFICATION 32 12 13
P02	STANDARD ASPHALT PAVEMENT REFER TO SITE DETAIL 2/L600 AND SPECIFICATION 32 12 13
P03	STANDARD DUTY CONCRETE PAVEMENT REFER TO SITE DETAIL 3,4 & 6/L600 AND SPECIFICATION 32 13 13
P04	HEAVY DUTY CONCRETE PAVEMENT REFER TO SITE DETAIL 4-6/L600 AND SPECIFICATION 32 13 13
P05	ASPHALT, R.O.W REFER TO CITY STANDARDS
P06	PLAYGROUND SURFACING, WOOD FIBER REFER TO SITE DETAIL 3/L602 **ADD ALTERNATE: SYNTHETIC TURF SURFACING**
P07	PLAYGROUND SURFACING, SYNTHETIC TURF REFER TO SITE DETAIL 1/L602
P08	AGGREGATE PAVEMENT DRIP EDGE REFER TO SITE DETAILS 6-7/L410 AND SPECIFICATION 32 05 16
P09	AGGREGATE PAVEMENT, REFER TO SITE DETAILS AND SPECIFICATIONS
P10	ASPHALT, R.O.W, MILL AND RESURFACE REFER TO CITY STANDARDS

	SIGNAGE KEYNOTES (COMPLY WITH MUTCD STANDARDS)(VIF REGULATORY SIGNS WITH CITY REPRESENTATIVE)
KEY	DESCRIPTION / REFERENCE
S01	BUS ONLY REFER TO SITE DETAIL 6/L602
S02	EMERGENCY ACCESS ONLY REFER TO SITE DETAIL 6/L602
S03	STOP SIGN REFER TO SITE DETAIL 6/L602
S04	VAN ACCESSIBLE ADA PARKING REFER TO SITE DETAIL 7/L601
S05	ACCESSIBLE ADA PARKING REFER TO SITE DETAIL 7/L601

	WALL KEYNOTES
KEY	DESCRIPTION
W01	CONCRETE SEAT WALL, TYPE 1 REFER TO SITE DETAIL 10/L602
W02	CONCRETE SEAT WALL, TYPE 2 REFER TO SITE DETAIL 11/L602

FOR PLAYGROUND EQUIPMENT - REFER TO SHEETS L110 & L210

BCSC TOGETHER WE LEARN

CSO
8831 Keystone Crossing, Indianapolis, IN 46240
317.848.7800 | csoinc.net

© 2018 CSO Architects, Inc. All Rights Reserved

Howeler+Yoon Architecture
617.517.4101 howeleryoon.com

context DESIGN

PROJECT:
BARTHOLOMEW CONSOLIDATED SCHOOL CORPORATION
MAPLE GROVE ELEMENTARY
TIPTON LAKES BLVD, COLUMBUS, IN 47201

SCOPE DRAWINGS:
These drawings indicate the general scope of the project in terms of demolition, new construction, the relationship of the building, the major architectural elements and the type of structural, mechanical and electrical systems.
The specifications are intended to indicate and describe all work required for full performance and completion of the requirements of the Contract.
On the basis of the general scope indicated or described, the trade contractors shall furnish all items required for the proper execution and completion of the work.

REVISIONS:

1	ADDENDUM 1	06/10/2025
2	ADDENDUM 2	06/17/2025

ISSUE DATE	DRAWN BY	CHECKED BY
05/30/25	MA / LM	AP

DRAWING TITLE:
SITE MATERIALS PLAN

CERTIFIED BY:
ALYSSA P. PRAZEAU
REGISTERED
No. 2020-0132
STATE OF INDIANA
LANDSCAPE ARCHITECT
EXPIRES 12-31-2025

DRAWING NUMBER
L102

PROJECT NUMBER
24-1815

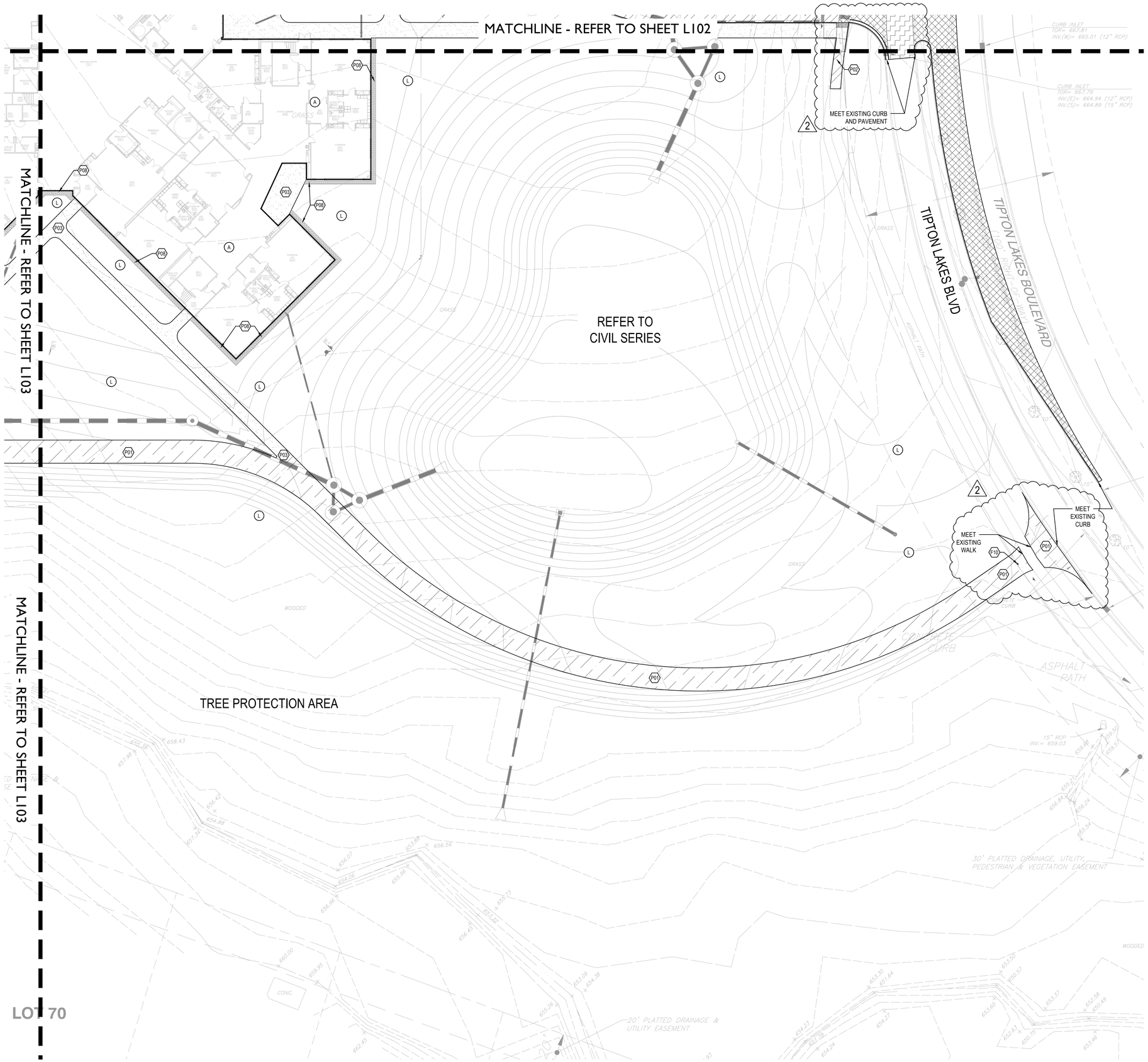

	REFERENCE KEYNOTES
KEY	DESCRIPTION / REFERENCE
A	ARCHITECTURAL FEATURE REFER TO ARCHITECTURAL SHEETS
L	LANDSCAPE OR PLANTED AREA REFER TO L400 SERIES
U	UTILITY FEATURE REFER TO CIVIL SERIES

	CURB AND RAMP KEYNOTES
KEY	DESCRIPTION
P01	CONCRETE POST CURB REFER TO SITE DETAIL 8/L600
P02	INTEGRAL CONCRETE CURB & WALK REFER TO SITE DETAIL 7/L600
P03	WHEEL STOP REFER TO SITE DETAIL 9/L600
P04	CURB RAMP, PARALLEL REFER TO SITE DETAIL 1/L601
P05	CURB RAMP, STRAIGHT REFER TO SITE DETAIL 2/L601
P06	CURB RAMP, DOUBLE FLARE REFER TO SITE DETAIL 3/L601
P07	CURB RAMP, DEPRESSED REFER TO SITE DETAIL 4/L601
P08	PLAY SURFACING PERIMETER CURB REFER TO SITE DETAIL 4/L602
P09	PLAY SURFACING PERIMETER INTEGRAL CURB AND WALK, REFER TO SITE DETAIL 2/L602
P10	DETECTABLE WARNING SURFACE REFER TO SPECIFICATIONS
P11	COMBINED CURB AND GUTTER REFER TO CITY STANDARDS
P12	SLOPED CONCRETE CURB REFER TO SITE DETAIL 10/L600
P13	CURB TRANSITION REFER TO SITE DETAIL 11/L600

	SITE FURNISHINGS KEYNOTES
KEY	DESCRIPTION
F01	BENCH REFER TO SPECIFICATION 32 33 00
F02	TRASH RECEPTACLE REFER TO SPECIFICATION 32 33 00
F03	BIKE RACK REFER TO SPECIFICATION 32 33 00
F04	ENTRANCE SIGN BY OTHERS
F05	28' BARRIER GATE REFER TO SPECIFICATIONS
F06	HALF COURT BASKETBALL REFER TO SITE DETAIL 5/L602
F07	FLAG POLE REFER TO SPECIFICATIONS
F08	STEEL PIPE BOLLARD REFER TO SITE DETAIL 7/L602
F09	STEEL PIPE BOLLARD WITH SLIP-OVER COVER REFER TO SITE DETAIL 7/L602
F10	COLLAPSIBLE BOLLARD REFER TO SPECIFICATION 32 33 00

	STRIPING KEYNOTES REFER TO SPECIFICATION 32 17 23
KEY	DESCRIPTION / REFERENCE
M01	VEHICULAR STRIPING, WHITE REFER TO SPECIFICATIONS
M02	BUS STRIPING, WHITE REFER SPECIFICATIONS
M03	STOP BAR, WHITE REFER TO SPECIFICATIONS
M04	ADA PARKING SYMBOL, BLUE REFER TO SITE DETAIL 6/L601 AND SPECIFICATIONS
M05	ADA PARKING STRIPING, BLUE REFER TO SITE DETAIL 6/L601 AND SPECIFICATIONS
M06	CROSSWALK STRIPING, WHITE REFER TO SITE DETAIL 5/L601 AND SPECIFICATIONS
M07	PICK-UP / DROP-OFF STACKING LANES, WHITE REFER TO SPECIFICATIONS
M08	PICK-UP / DROP-OFF STACKING LANE NUMBERS, WHITE, REFER TO SPECIFICATIONS
M09	DIRECTIONAL ARROWS, WHITE, REFER TO SPECIFICATIONS

	PAVEMENT KEYNOTES
KEY	DESCRIPTION
P01	HEAVY DUTY ASPHALT PAVEMENT REFER TO SITE DETAIL 1/L600 AND SPECIFICATION 32 12 13
P02	STANDARD ASPHALT PAVEMENT REFER TO SITE DETAIL 2/L600 AND SPECIFICATION 32 12 13
P03	STANDARD DUTY CONCRETE PAVEMENT REFER TO SITE DETAIL 3,4 & 6/L600 AND SPECIFICATION 32 13 13
P04	HEAVY DUTY CONCRETE PAVEMENT REFER TO SITE DETAIL 4-6/L600 AND SPECIFICATION 32 13 13
P05	ASPHALT, R.O.W. REFER TO CITY STANDARDS
P06	PLAYGROUND SURFACING, WOOD FIBER REFER TO SITE DETAIL 3/L602 **ADD ALTERNATE: SYNTHETIC TURF SURFACING**
P07	PLAYGROUND SURFACING, SYNTHETIC TURF REFER TO SITE DETAIL 1/L602
P08	AGGREGATE PAVEMENT DRIP EDGE REFER TO SITE DETAILS 6-7/L410 AND SPECIFICATION 32 05 16
P09	AGGREGATE PAVEMENT, REFER TO SITE DETAIL 8/L602
P10	ASPHALT, R.O.W, MILL AND RESURFACE REFER TO CITY STANDARDS

	SIGNAGE KEYNOTES (COMPLY WITH MUTCD STANDARDS)(VIF REGULATORY SIGNS WITH CITY REPRESENTATIVE)
KEY	DESCRIPTION / REFERENCE
S01	BUS ONLY REFER TO SITE DETAIL 6/L602
S02	EMERGENCY ACCESS ONLY REFER TO SITE DETAIL 6/L602
S03	STOP SIGN REFER TO SITE DETAIL 6/L602
S04	VAN ACCESSIBLE ADA PARKING REFER TO SITE DETAIL 7/L601
S05	ACCESSIBLE ADA PARKING REFER TO SITE DETAIL 7/L601

	WALL KEYNOTES
KEY	DESCRIPTION
W01	CONCRETE SEAT WALL, TYPE 1 REFER TO SITE DETAIL 10/L602
W02	CONCRETE SEAT WALL, TYPE 2 REFER TO SITE DETAIL 11/L602

FOR PLAYGROUND EQUIPMENT - REFER TO SHEETS L110 & L210

North

0 10' 20' 40'
Scale 1" = 20'-0"

BCSC TOGETHER WE LEARN

CSO
8831 Keystone Crossing, Indianapolis, IN 46240
317.848.7800 | csoinc.net

© 2018 CSO Architects, Inc. All Rights Reserved

Howeler+Yoon Architecture
617.517.4101 howelleryoon.com

context DESIGN

PROJECT:
BARTHOLOMEW CONSOLIDATED SCHOOL CORPORATION
MAPLE GROVE ELEMENTARY
TIPTON LAKES BLVD, COLUMBUS, IN 47201

SCOPE DRAWINGS:
These drawings indicate the general scope of the project in terms of architectural design concept, the dimensions of the building, the major architectural elements and the type of structural, mechanical and electrical systems. The contract documents (specifications) intend to describe all work required for full performance and completion of the requirements of the Contract.
On the basis of the general scope indicated or described the State contractors shall furnish all items required for the proper execution and completion of the work.

REVISIONS:

1	ADDENDUM 1	06/10/2025
2	ADDENDUM 2	06/17/2025

ISSUE DATE	DRAWN BY	CHECKED BY
05/30/25	MA / LM	AP

DRAWING TITLE:
SITE MATERIALS PLAN

CERTIFIED BY:
ALYSSA P. PRAZEAU
REGISTERED
No. 2020-0132
STATE OF INDIANA
LANDSCAPE ARCHITECT
EXPIRES 12-31-2025

DRAWING NUMBER
L104

PROJECT NUMBER
24-1815

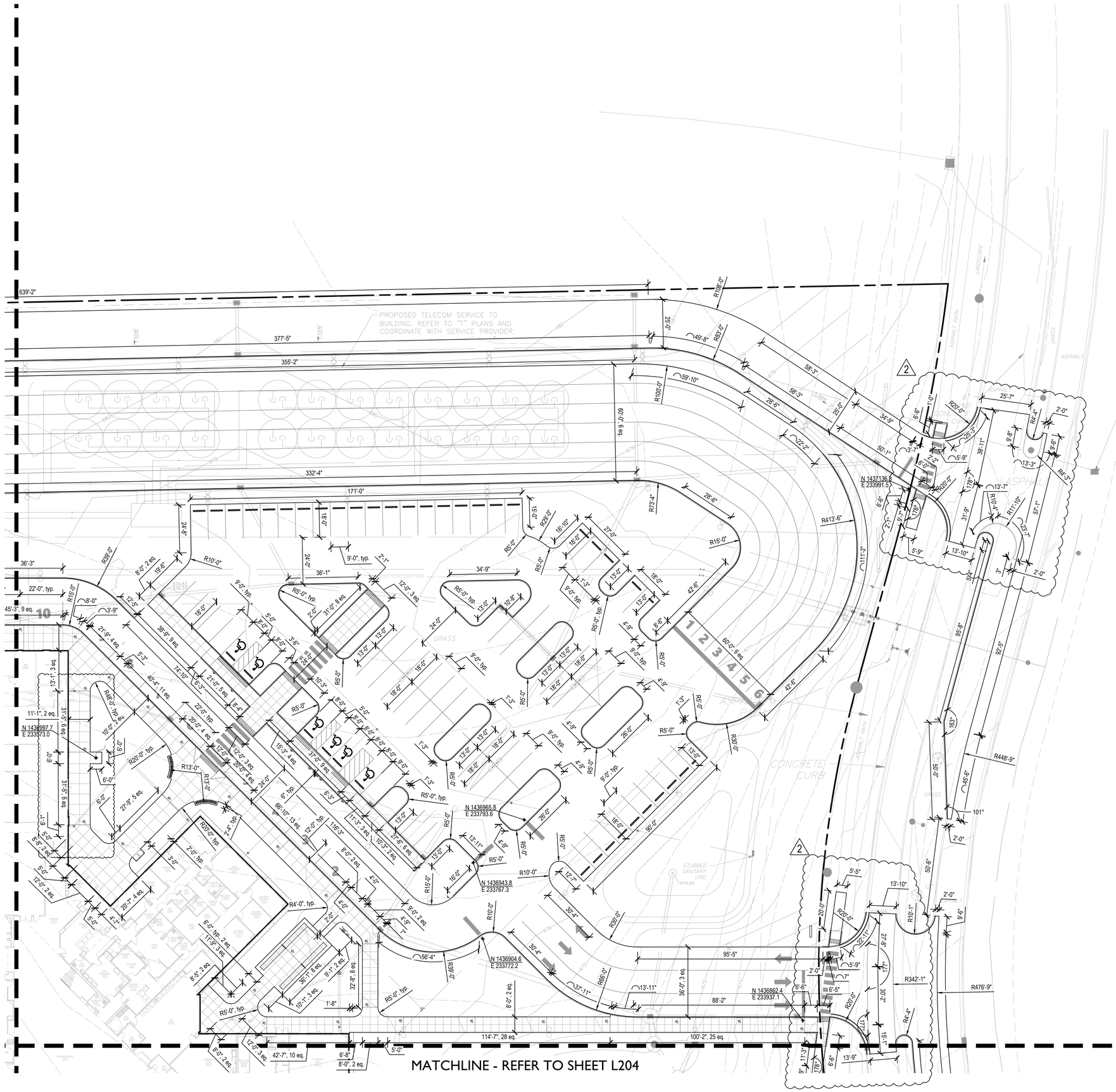

LAYOUT NOTES

1. Dimensions are shown to Face of Curb unless otherwise noted.
2. Contractor shall coordinate final joint locations in the field with the Landscape Architect. Align to existing conditions when practical, including at building and wall corners, connections to existing work, and to centerlines of doors.
3. Space control joints evenly between all bands and expansion joints as shown, unless otherwise dimensioned. Space interim joints equally whenever possible.
4. Digital AutoCAD files will be provided to the successful bidder as a courtesy to assist with field layout. The Contractor maintains all responsibility for the use, accuracy, and confirmation of such data.
5. All pavement striping shown shall adhere to Specifications. The Contractor shall include in their bid any miscellaneous copy, striping, or curb painting that may be requested by the Fire Marshal.
6. All disturbed areas not proposed to receive pavements shall be dressed with topsoil and seeded per Specifications.
7. Contractor shall provide and install One (1) Accessible Parking Sign per accessible parking space indicated in plans. Coordinate final location in the field with Landscape Architect.

ej. - Expansion Joint

BCSC
TOGETHER WE LEARN

CSO
8831 Keystone Crossing, Indianapolis, IN 46240
317.848.7800 | csoinc.net

© 2018 CSO Architects, Inc. All Rights Reserved

Höweler+Yoon Architecture
617.517.4101 howeleryoon.com

context DESIGN

PROJECT:
BARTHOLOMEW CONSOLIDATED SCHOOL CORPORATION
MAPLE GROVE ELEMENTARY
TIPTON LAKES BLVD, COLUMBUS, IN 47201

SCOPE DRAWINGS:
These drawings indicate the general scope of the project in terms of architectural design concept, the dimensions of the building, the major architectural elements and the type of structural, mechanical and electrical systems.
The drawings do not necessarily indicate or describe all work required for full performance and completion of the requirements of the Contract.
On the basis of the general scope indicated or described, the Contractor shall furnish all items required for the proper execution and completion of the work.

REVISIONS:

1	ADDENDUM 1	06/10/2025
2	ADDENDUM 2	06/17/2025

ISSUE DATE	DRAWN BY	CHECKED BY
05/30/25	MA / LM	AP

DRAWING TITLE:
SITE LAYOUT PLAN

CERTIFIED BY:
ALYSSA P. PRAZEAU
REGISTERED
No. 2020-0132
STATE OF INDIANA
LANDSCAPE ARCHITECT
EXPIRES 12-31-2025

DRAWING NUMBER
L202

PROJECT NUMBER
24-1815

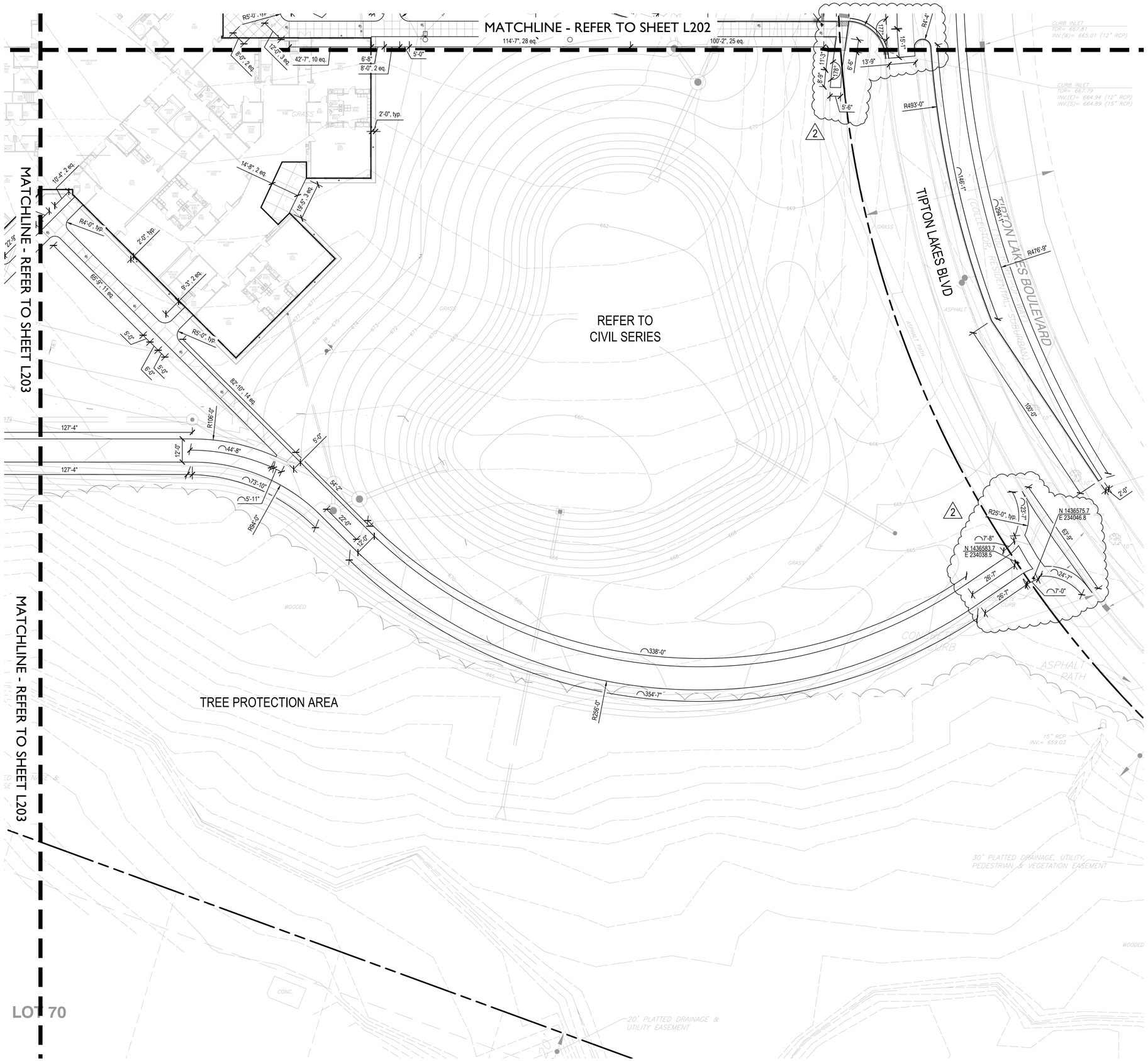

LAYOUT NOTES

1. Dimensions are shown to Face of Curb unless otherwise noted.
2. Contractor shall coordinate final joint locations in the field with the Landscape Architect. Align to existing conditions when practical, including at building and wall corners, connections to existing work, and to centerlines of doors.
3. Space control joints evenly between all bands and expansion joints as shown, unless otherwise dimensioned. Space interim joints equally whenever possible.
4. Digital AutoCAD files will be provided to the successful bidder as a courtesy to assist with field layout. The Contractor maintains all responsibility for the use, accuracy, and confirmation of such data.
5. All pavement striping shown shall adhere to Specifications. The Contractor shall include in their bid any miscellaneous copy, striping, or curb painting that may be requested by the Fire Marshal.
6. All disturbed areas not proposed to receive pavements shall be dressed with topsoil and seeded per Specifications.
7. Contractor shall provide and install One (1) Accessible Parking Sign per accessible parking space indicated in plans. Coordinate final location in the field with Landscape Architect.

ej. - Expansion Joint

BCSC
TOGETHER WE LEARN

CSO
8831 Keystone Crossing, Indianapolis, IN 46240
317.848.7800 | csoinc.net

© 2018 CSO Architects, Inc. All Rights Reserved

Höweler+Yoon Architecture
617.517.4101 howeleryoon.com

context DESIGN

PROJECT:
BARTHOLOMEW CONSOLIDATED SCHOOL CORPORATION
MAPLE GROVE ELEMENTARY
TIPTON LAKES BLVD, COLUMBUS, IN 47201

SCOPE DRAWINGS:
These drawings indicate the general scope of the project in terms of architectural design concept, the dimensions of the building, the major architectural elements and the type of structural, mechanical and electrical systems.
The drawings do not necessarily indicate or describe all work required for full performance and completion of the requirements of the Contract.
On the basis of the general scope indicated or described, the trade contractors shall furnish all items required for the proper execution and completion of the work.

REVISIONS:

1	ADDENDUM 1	06/10/2025
2	ADDENDUM 2	06/17/2025

ISSUE DATE	DRAWN BY	CHECKED BY
05/30/25	MA / LM	AP

DRAWING TITLE:
SITE LAYOUT PLAN

CERTIFIED BY:
ALYSSA P. PRAZEAU
REGISTERED
No. 2020-0132
STATE OF INDIANA
LANDSCAPE ARCHITECT
EXPIRES 12-31-2025

DRAWING NUMBER
L204

PROJECT NUMBER
24-1815

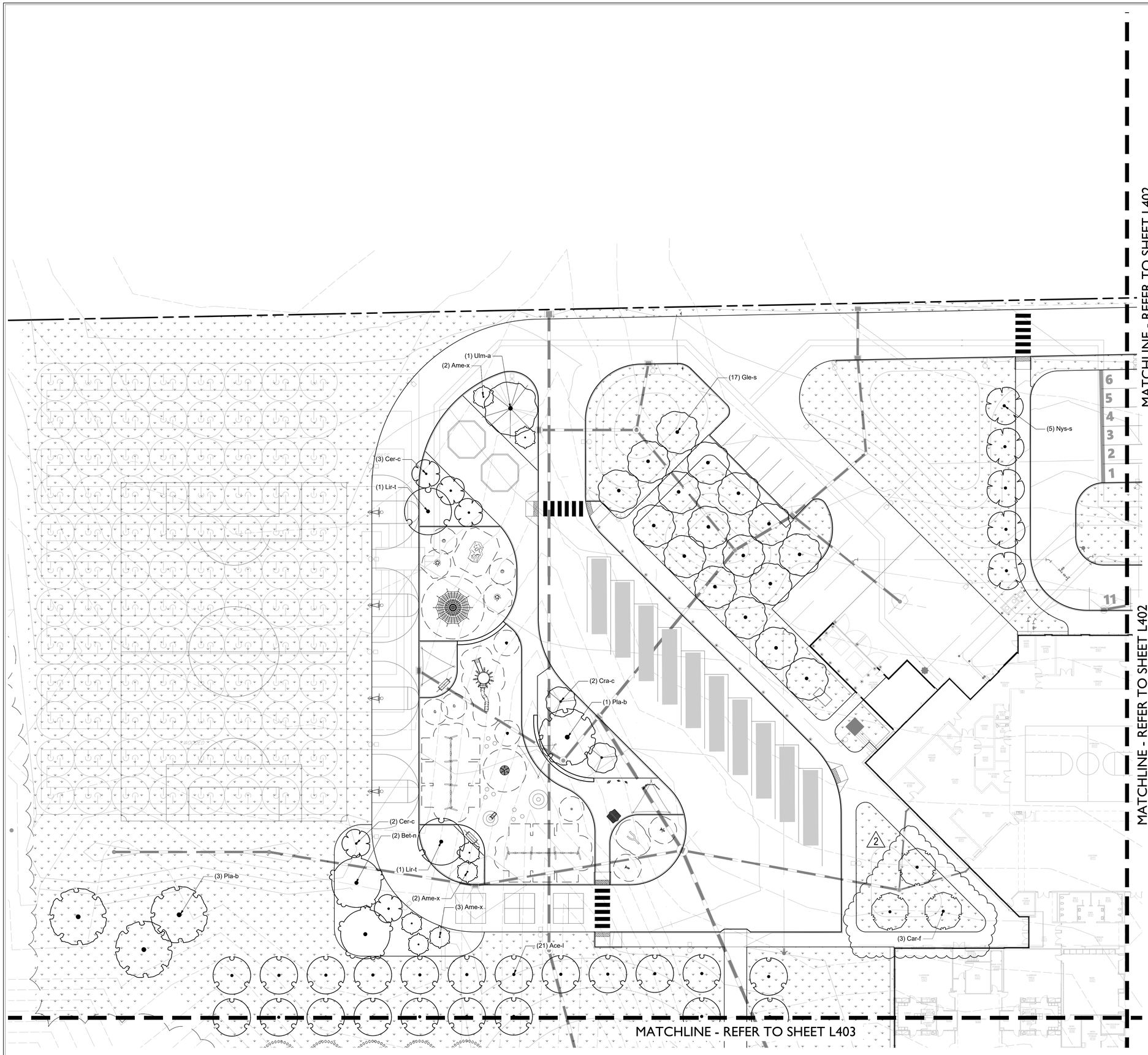

GENERAL LANDSCAPE AND PLANTING NOTES

1. Refer to Project Manual for Planting Specifications and Topsoil requirements. Refer to Plant Schedule and Planting Details for additional information.
2. All materials are subject to the approval of the Landscape Architect and Owner at any time. Landscape Architect to inspect all plant locations and plant bed conditions prior to installation. On-site adjustments may be required.
3. Rootballs shall meet or exceed size standards as set forth in 'American Standards for Nursery Stock'. MAIN LEADERS OF ALL TREES SHALL REMAIN INTACT.
4. Remove from the site any plant material that turns brown or defoliates within five (5) days after planting. Replace immediately with approved, specified material.
5. Plant counts indicated on drawings are for Landscape Architect's use only. Contractor shall make own plant quantity takeoffs using drawings, specifications, and plant schedule requirements (i.e., spacing), unless otherwise directed by Landscape Architect. Contractor to verify bed measurements and install appropriate quantities as governed by plant spacing per schedule. Plant material quantities shown on plan are minimum quantities. Additional material may be needed to meet spacing requirements and field conditions.
6. Seed all areas disturbed by construction activities that are not otherwise noted to receive pavement, planting bed, or sod treatment.
7. The Contractor shall install and/or amend topsoil in all proposed bed areas to meet Specifications. Contractor shall coordinate quantity and placement of topsoil. Landscaper shall verify depth of topsoil prior to plant installation. (Refer to specifications for topsoil source and placement requirements)
8. All tree locations shall be marked with 2x2" stakes prior to planting for review and approval by the Landscape Architect. Any plant material installed in an incorrect location, by the judgment of the Landscape Architect, shall be reinstalled at the Contractor's expense.
9. All plant beds shall receive 3" minimum of shredded hardwood bark mulch (unless otherwise noted).
10. Verify all utility locations in the field prior to beginning work. Repair all damaged utilities to Owner's satisfaction at no additional cost.
11. The Contractor shall maintain all plant material and lawns until the project is fully accepted by the Landscape Architect, unless otherwise noted.
12. All workmanship and materials shall be guaranteed by the Contractor for a period of one calendar year after Final Acceptance.
13. Install all plant material in accordance with all local codes and ordinances. Coordinate with the Owner to obtain any required permits necessary to complete work.
14. Contractor shall test all tree pits for drainage. Any tree pit that holds water for more than 24 hours shall be installed using tree pit drainage.
15. Tree Protection Fencing is the responsibility of the Contractor. Minimum protected area shall include the full drip line of the canopy. NO construction activities, material storage, etc. may occur within that area. The Contractor shall ensure that no soil compaction or tree damage occurs in any Protected areas, at any time during the construction process.
16. Trees shall be matched in groups unless otherwise noted.

North

0 10 20 40

Scale 1" = 20'-0"

BCSC
TOGETHER WE LEARN

CSO
8831 Keystone Crossing, Indianapolis, IN 46240
317.848.7800 | csoinc.net

© 2018 CSO Architects, Inc. All Rights Reserved

Howeler+Yoon Architecture
617.517.4101 howeleryoon.com

context DESIGN

PROJECT:
BARTHOLOMEW CONSOLIDATED SCHOOL CORPORATION
MAPLE GROVE ELEMENTARY
TIPTON LAKES BLVD, COLUMBUS, IN 47201

SCOPE DRAWINGS:
These drawings indicate the general scope of the project in terms of architectural design concept, the dimensions of the building, the major architectural elements and the type of structural and mechanical electrical systems.
The drawings do not necessarily indicate or describe all work required for full performance and completion of the requirements of the Contract.
On the basis of the general scope indicated or described, the Contractor shall furnish all labor and materials required for the proper execution and completion of the work.

REVISIONS:

1	ADDENDUM 1	06/10/2025
2	ADDENDUM 2	06/17/2025

ISSUE DATE	DRAWN BY	CHECKED BY
05/30/25	MA / LM	AP

DRAWING TITLE:
SITE PLANTING PLAN

CERTIFIED BY:
ALYSSA P. PRAZERAU
REGISTERED
No. 2020-0132
STATE OF INDIANA
LANDSCAPE ARCHITECT
EXPIRES 12-31-2025

DRAWING NUMBER
L401

PROJECT NUMBER
24-1815

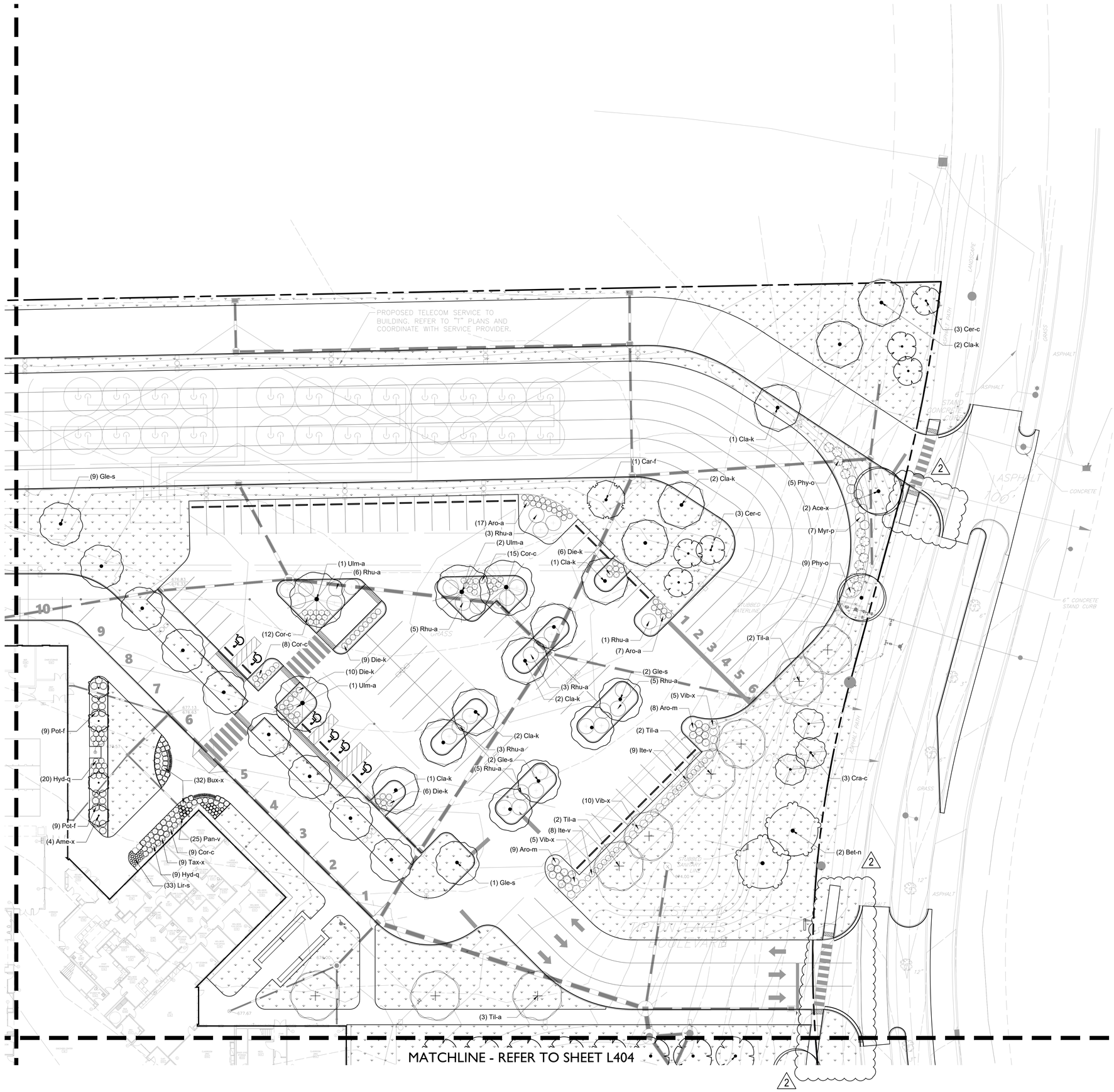

GENERAL LANDSCAPE AND PLANTING NOTES

1. Refer to Project Manual for Planting Specifications and Topsoil requirements. Refer to Plant Schedule and Planting Details for additional information.
2. All materials are subject to the approval of the Landscape Architect and Owner at any time. Landscape Architect to inspect all plant locations and plant bed conditions prior to installation. On-site adjustments may be required.
3. Rootballs shall meet or exceed size standards as set forth in 'American Standards for Nursery Stock'. MAIN LEADERS OF ALL TREES SHALL REMAIN INTACT.
4. Remove from the site any plant material that turns brown or defoliates within five (5) days after planting. Replace immediately with approved, specified material.
5. Plant counts indicated on drawings are for Landscape Architect's use only. Contractor shall make own plant quantity takeoffs using drawings, specifications, and plant schedule requirements (i.e., spacing), unless otherwise directed by Landscape Architect. Contractor to verify bed measurements and install appropriate quantities as governed by plant spacing per schedule. Plant material quantities shown on plan are minimum quantities. Additional material may be needed to meet spacing requirements and field conditions.
6. Seed all areas disturbed by construction activities that are not otherwise noted to receive pavement, planting bed, or sod treatment.
7. The Contractor shall install and/or amend topsoil in all proposed bed areas to meet Specifications. Contractor shall coordinate quantity and placement of topsoil. Landscaper shall verify depth of topsoil prior to plant installation. (Refer to specifications for topsoil source and placement requirements)
8. All tree locations shall be marked with 2x2" stakes prior to planting for review and approval by the Landscape Architect. Any plant material installed in an incorrect location, by the judgment of the Landscape Architect, shall be reinstalled at the Contractor's expense.
9. All plant beds shall receive 3" minimum of shredded hardwood bark mulch (unless otherwise noted).
10. Verify all utility locations in the field prior to beginning work. Repair all damaged utilities to Owner's satisfaction at no additional cost.
11. The Contractor shall maintain all plant material and lawns until the project is fully accepted by the Landscape Architect, unless otherwise noted.
12. All workmanship and materials shall be guaranteed by the Contractor for a period of one calendar year after Final Acceptance.
13. Install all plant material in accordance with all local codes and ordinances. Coordinate with the Owner to obtain any required permits necessary to complete work.
14. Contractor shall test all tree pits for drainage. Any tree pit that holds water for more than 24 hours shall be installed using tree pit drainage.
15. Tree Protection Fencing is the responsibility of the Contractor. Minimum protected area shall include the full drip line of the canopy. NO construction activities, material storage, etc. may occur within that area. The Contractor shall ensure that no soil compaction or tree damage occurs in any Protected areas, at any time during the construction process.
16. Trees shall be matched in groups unless otherwise noted.

BCSC TOGETHER WE LEARN

CSO
8831 Keystone Crossing, Indianapolis, IN 46240
317.848.7800 | csoinc.net
© 2018 CSO Architects, Inc. All Rights Reserved

Howeler+Yoon Architecture
617.517.4101 howeleryoon.com

context DESIGN

PROJECT:
BARTHOLOMEW CONSOLIDATED SCHOOL CORPORATION
MAPLE GROVE ELEMENTARY
TIPTON LAKES BLVD, COLUMBUS, IN 47201

SCOPE DRAWINGS:
These drawings indicate the general scope of the project in terms of architectural design concept, the dimensions of the building, the major architectural elements and the type of construction and mechanical systems required.
The drawings do not necessarily indicate or describe all work required for full performance and completion of the requirements of the Contract.
On the basis of the general scope indicated or described, the Contractor shall furnish all labor and materials required for the proper execution and completion of the work.

REVISIONS:

1	ADDENDUM 1	06/10/2025
2	ADDENDUM 2	06/17/2025

ISSUE DATE	DRAWN BY	CHECKED BY
05/30/25	MA / LM	AP

DRAWING TITLE:
SITE PLANTING PLAN

CERTIFIED BY:
ALYSSA P. PRAZEAU
REGISTERED
No. 2020-0132
STATE OF INDIANA
LANDSCAPE ARCHITECT
EXPIRES 12-31-2025

DRAWING NUMBER
L402

PROJECT NUMBER
24-1815

GENERAL LANDSCAPE AND PLANTING NOTES

1. Refer to Project Manual for Planting Specifications and Topsoil requirements. Refer to Plant Schedule and Planting Details for additional information.
2. All materials are subject to the approval of the Landscape Architect and Owner at any time. Landscape Architect to inspect all plant locations and plant bed conditions prior to installation. On-site adjustments may be required.
3. Rootballs shall meet or exceed size standards as set forth in 'American Standards for Nursery Stock'. MAIN LEADERS OF ALL TREES SHALL REMAIN INTACT.
4. Remove from the site any plant material that turns brown or defoliates within five (5) days after planting. Replace immediately with approved, specified material.
5. Plant counts indicated on drawings are for Landscape Architect's use only. Contractor shall make own plant quantity takeoffs using drawings, specifications, and plant schedule requirements (i.e., spacing), unless otherwise directed by Landscape Architect. Contractor to verify bed measurements and install appropriate quantities as governed by plant spacing per schedule. Plant material quantities shown on plan are minimum quantities. Additional material may be needed to meet spacing requirements and field conditions.
6. Seed all areas disturbed by construction activities that are not otherwise noted to receive pavement, planting bed, or sod treatment.
7. The Contractor shall install and/or amend topsoil in all proposed bed areas to meet Specifications. Contractor shall coordinate quantity and placement of topsoil. Landscaper shall verify depth of topsoil prior to plant installation. (Refer to specifications for topsoil source and placement requirements)
8. All tree locations shall be marked with 2x2" stakes prior to planting for review and approval by the Landscape Architect. Any plant material installed in an incorrect location, by the judgment of the Landscape Architect, shall be reinstalled at the Contractor's expense.
9. All plant beds shall receive 3" minimum of shredded hardwood bark mulch (unless otherwise noted).
10. Verify all utility locations in the field prior to beginning work. Repair all damaged utilities to Owner's satisfaction at no additional cost.
11. The Contractor shall maintain all plant material and lawns until the project is fully accepted by the Landscape Architect, unless otherwise noted.
12. All workmanship and materials shall be guaranteed by the Contractor for a period of one calendar year after Final Acceptance.
13. Install all plant material in accordance with all local codes and ordinances. Coordinate with the Owner to obtain any required permits necessary to complete work.
14. Contractor shall test all tree pits for drainage. Any tree pit that holds water for more than 24 hours shall be installed using tree pit drainage.
15. Tree Protection Fencing is the responsibility of the Contractor. Minimum protected area shall include the full drip line of the canopy. NO construction activities, material storage, etc. may occur within that area. The Contractor shall ensure that no soil compaction or tree damage occurs in any Protected areas, at any time during the construction process.
16. Trees shall be matched in groups unless otherwise noted.

BCSC
TOGETHER WE LEARN

CSO
8831 Keystone Crossing, Indianapolis, IN 46240
317.848.7800 | csoinc.net

© 2018 CSO Architects, Inc. All Rights Reserved

Howeler+Yoon Architecture
617.517.4101 howelieryoon.com

context DESIGN

PROJECT:
BARTHOLOMEW CONSOLIDATED SCHOOL CORPORATION
MAPLE GROVE ELEMENTARY
TIPTON LAKES BLVD, COLUMBUS, IN 47201

SCOPE DRAWINGS:
These drawings indicate the general scope of the project in terms of architectural design concept, the dimensions of the building, the major architectural elements and the type of construction, and the general quality of materials.
The drawings do not necessarily indicate or describe all work required for full performance and completion of the requirements of the Contract.
On the basis of the general scope indicated or described, the Contractor shall furnish all labor and materials required for the proper execution and completion of the work.

REVISIONS:

1	ADDENDUM 1	06/10/2025
2	ADDENDUM 2	06/17/2025

ISSUE DATE	DRAWN BY	CHECKED BY
05/30/25	MA / LM	AP

DRAWING TITLE:
SITE PLANTING PLAN

CERTIFIED BY:
ALYSSA P. PRAZEAU
REGISTERED
No. 2020-0132
STATE OF INDIANA
LANDSCAPE ARCHITECT
EXPIRES 12-31-2025

DRAWING NUMBER
L404

PROJECT NUMBER
24-1815

COORDINATION WITH OTHER TRADES

1. The Contractor shall coordinate and check all dimensions relating to Architectural finishes, mechanical equipment and openings, elevator shafts and overrides, etc. and notify the Architect/Engineer of any discrepancies before proceeding with any work in the area under question.
2. The Structural Drawings shall be used in conjunction with the Drawings of all other disciplines and the Specifications. The Contractor shall verify the requirements of other trades as to sleeves, chases, hangers, inserts, anchors, holes, and other items to be placed or set in the Structural Work.
3. There shall be no vertical or horizontal sleeves set, or holes cut or drilled in any beam or column unless shown on the Structural Drawings or approved in writing by the SER.
4. Mechanical and electrical openings through supported slabs and walls, 8" diameter or larger not shown on the Structural Drawings must be approved by the SER. Openings less than 8" diameter shall have at least 1'-0" clear between openings, unless approved in writing by the SER.
5. Verify locations and dimensions of mechanical and electrical openings through supported slabs and walls shown on the Structural Drawings with the Mechanical and Electrical Contractors.
6. Do not install conduit in supported slabs, slabs on grade, or concrete walls unless explicitly shown or noted on the Structural Drawings.
7. Do not suspend any items, such as ductwork, mechanical or electrical fixtures, ceilings, etc. from steel roof deck or wood roof sheathing.
8. The Mechanical Contractor shall verify that mechanical units supported by steel framing are capable of spanning the distance between the supporting members indicated on the Structural Drawings. The Mechanical Contractor shall supply additional support framing as required.
9. If the Drawings and Specifications are in conflict, the most stringent restrictions and requirements shall govern.

GENERAL NOTES

1. The Contractor shall be responsible for complying with all safety precautions and regulations during the work. The SER will not advise on, nor issue direction as to safety precautions and programs.
2. The Structural Drawings herein represent the finished structure. The Contractor shall provide all temporary guying and bracing required to erect and hold the structure in proper alignment until all Structural Work and connections have been completed. The investigation, design, safety, adequacy and inspection of the bracing, shoring, temporary supports, etc. is the sole responsibility of the Contractor.
3. The SER shall not be responsible for the methods, techniques and sequences of procedures to perform the Work. The supervision of the Work is the sole responsibility of the Contractor.
4. The Drawings indicate general and typical details of construction. Where conditions are not specifically shown, similar details of construction shall be used, subject to approval of the SER.
5. All structural systems which are to be composed of components to be field erected shall be supervised by the Supplier during manufacturing, delivery, handling, storage, and erection in accordance with the Supplier's instructions and requirements.
6. Loading applied to the structure during the process of construction shall not exceed the safe load-carrying capacity of the structural members. The live loads used in the design of this structure are indicated in the "Design Criteria Notes." Do not apply any construction loads until structural framing is properly connected together and until all permanent bracing is in place.
7. All ASTM and other referenced standards and codes are for the latest editions of these publications, unless noted otherwise.
8. Shop drawings and other items shall be submitted to the SER for review prior to fabrication. All Shop Drawings shall be reviewed by the Contractor before submittal. The SER's review is to be for conformance with the design concept and general compliance with the relevant Contract Documents. The SER's review does not relieve the Contractor of the sole responsibility to review, check, and coordinate the Shop Drawings prior to submission. The Contractor remains solely responsible for errors and omissions assocated with the preparation of Shop Drawings as they pertain to member sizes, details, dimensions, etc.
9. Submit Shop Drawings electronically. In no case shall reproductions of the Contract Documents be used as Shop Drawings. As a minimum, submit the following items for review.
   A. Concrete Mix Design(s).
   B. Reinforcing Steel Shop Drawings.
   C. Masonry Wall Reinforcing Steel Shop Drawings.
   D. Structural Steel Shop Drawings.
   E. Steel Joist Shop Drawings.
   F. Steel Deck Shop Drawings.
   G. Cold-Formed Steel Framing Systems.
   H. Prefabricated Wood Truss and Wall Panel Systems.
10. Resubmitted Shop Drawings: Resubmitted shop drawings are reviewed only for responses to comments made in the previous submittal.
11. When calculations are included in the submittals for components of work designed and certified by a Specialty Structural Engineer, the review by the Structural Engineer of Record (SER) shall be for conformance with the relevant Contract Documents. The SER's review does not relieve the Specialty Structural Engineer from responsiblity for the design of the system(s) and the coordination with the elements of the structure under the certification of the Engineer of Record, or other Specialty Structural Engineer. The SER's review does not constitute a warranty of the accuracy or completeness of the Specialty Structural Engineer's design.
12. Contractors shall visit the site prior to bid to ascertain conditions which may adversely affect the work or cost thereof.
13. No structural member may be cut, notched, or otherwise reduced in strength without written direction from the SER.
14. When modifications are proposed to structural elements under the design and certification of a Specialty Engineer, written authorization by the Specialty Engineer must be obtained and submitted to the SER for review, prior to performing the proposed modifications.

FOUNDATIONS

1. Proofroll slab on grade areas with a medium-weight roller or other suitable equipment to check for pockets of soft material hidden beneath a thin crust of better soil. Any unsuitable materials thus exposed should be removed and replaced with compacted, engineered fill as outlined in the specifications. Proofrolling operations shall be monitored by the Geotechnical Testing Agency.
2. All engineered fill beneath slabs and over footings should be compacted to a dry density of at least 95% of the Standard Proctor maximum dry density (ASTM D698). All fill which shall be stressed by foundation loads shall be approved granular materials compacted to a dry density of at least 100% (ASTM D698). Coordinate all fill and compaction operations with the Specifications and the Subsurface Investigation.
3. Compaction shall be accomplished by placing fill in approx. 8" lifts and mechanically compacting each lift to at least the specified minimum dry density. For large areas of fill, field density tests shall be performed for each 3,000 square feet of building area for each lift as necessary to insure adequate compaction is being achieved.
4. Column footings and wall footings to bear on firm natural soils or well-compacted engineered fill with allowable bearing pressures of 3,000 PSF and 2,500 PSF for column and wall footings respectively, as outlined in the Subsurface Investigation Report.
   It is essential that the foundations be inspected to ensure that all loose, soft or otherwise undesirable material (such as organics, existing fill, etc.) is removed and that the foundation will bear on satisfactory material. The Geotechnical Testing Agency shall inspect the subgade and perform any necessary tests to insure that the actual bearing capacities meet or exceed the design capacities. The Testing Agency shall verify the bearing capacity at each spread column footing and every 10 feet on center for strip footings prior to placement of concrete.
5. Place footings the same day the excavation is performed. If this is not possible, the footings shall be adequately protected against any detrimental change in condition, such as from disturbance, rain and freezing.
6. It is the responsibility of the Contractor and each Sub-Contractor to verify the location of all utilities and services shown, or not shown, and establish safe working conditions before commencing work.
7. The Contractor shall lay out the entire building and field verify all dimensions prior to excavation.
8. For information regarding subsurface conditions, refer to the Report of Geotechnical Engineering Exploration prepared by Patriot Engineering and Environmental, Inc., Patriot Project No. 25-0241-11G, dated May 19, 2025.

POST-INSTALLED DOWELS & ANCHOR RODS

1. All reinforcing steel and threaded rod anchors to be installed in 2-part chemical anchoring system shall be treated as follows:
   A. Drill holes larger than bar or rod to be embedded. Coordinate hole diameter with Manufacturer's requirements.
   B. Holes must be cleaned and prepared in accordance with Manufacturer's requirements.
   C. When reinforcing steel is encountered during drilling for installation of anchors, stop drilling and use a sensor to locate the reinforcing in the surrounding area and install anchor(s) as close as possible to the original location. Contact the Structural Engineer of Record for direction when the revised location is more than 2" from the original location, or when the original function of the anchorage is significantly altered. When in doubt, contact the SER for direction.
   D. Drill the hole a minimum of 15 bar diameters or as shown on the Drawings.
   E. Use a 2-part adhesive anchoring system, Hilti HIT-HY 200, or approved equal.
   F. For anchorage into hollow substrate, use Hilti HIT-HY 270, or approved equal.
   G. Reinforcing steel dowels shall be ASTM A615, Grade 60, unless noted.
   H. Anchor rods shall be ISO 898 5.8 (Hilti HAS-E), unless noted. Provide finish as noted on the Drawings. If not noted, provide hot-dip galvanized finish for interior applications. Provide stainless steel finish for exterior applications, unless noted.
2. When column anchor bolts/rods have been omitted, or damaged by construction operations, the Contractor must obtain the written approval of the SER prior to repair and/or replacement.
   A. As a precaution, the affected column must be guyed and braced after repair for the balance of the erection period.
   B. As an alternate to guying and bracing, the Contractor may at his option, employ a testing agency to perform a tensile pull test to confirm the strength of the repaired or replaced anchor bolt/rod. The tensile proof load must exceed 1.33 x the design load of the original anchor without causing distress of the anchor bolt/rod or the surrounding concrete. Reference the following table for the minimum proof loads:
      3/4" diameter: 11.6 kips
      7/8" diameter: 16.0 kips
      1" diameter: 20.9 kips
      Note: Values listed above are for ASTM F1554, Grade 36 material. When higher grade or strength materials are specified, refer to the AISC Manual of Steel Construction for minimum allowable loads to be multiplied by 1.33.
   C. When affected anchor bolts/rods are part of a fixed moment-resisting column base, such as those in moment-resisting space frames, canopies, or fixed-base installations, the repaired anchor bolts/rods must be proof-loaded, or the affected column footing and/or pier replaced in its entirety.
   D. When affected anchor bolts/rods are 1-1/8" diameter or larger, the affected column footing and/or pier must be replaced in its entirety.
   E. When affected anchor bolts/rods are part of a braced frame, the affected column footing and/or pier must be replaced in its entirety.
   F. Prior to erection, the controlling Contractor must provide written notification to the Steel Erector if there has been a repair, replacement or modification of the anchor bolts/rods for that column.

DESIGN CRITERIA

1. DESIGN STANDARDS: The intended design standards and/or criteria are as follows:

General	The 2014 Indiana Building Code (2012 International Building Code [IBC] with Indiana Amendments)
Concrete	ACI318
Masonry	ACI 530 / TMS 402
Steel	AISC Manual, Allowable Stress Design (ASD)
Steel Joists/Girders	Steel Joist Institute
Steel Deck	Steel Deck Institute
Cold-Formed Metal	AISI-ASD

   All referenced standards and codes, as well as ASTM numbers are for the latest editions of these publications, unless otherwise noted.
2. DEAD LOADS: Gravity Dead Loads used in the design of the structure are as computed for the materials of construction incorporated into the building, including but not limited to walls, floors, ceilings, stairways, fixed partitions, finishes, cladding and other similar architectural and structural items, as well as mechanical, electrical and plumbing equipment and fixtures, and material handling and fixed service equipment, including the weight of cranes.
3. LIVE LOADS: Gravity Live Loads used in the design of the structure meet or exceed the following table (IBC 2012, 1607.1):

OCCUPANCY OR USE:	Uniform (PSF):	Concentrated (LBS): [Note #1]
A. Schools		
1. Classrooms	40	1000
2. Corridors above First Floor	80	1000
3. First-floor Corridors	100	1000
B. Recreational Uses		
1. Gymnasiums / Exercise Rooms	100	---
2. Running Track	100	---
3. Reviewing Stands, Grandstands & Bleachers	100	Note "a"
C. Assembly Areas		
1. Fixed Seats	60	---
2. Projection & Control Rooms	50	---
3. Lobbies	100	---
4. Movable Seats	100	---
5. Stage Floors	150	---
D. Libraries		
1. Reading Rooms	60	1000
2. Stack Rooms	150	1000
E. Offices	50	2000
F. Light Storage	125	---
G. Mechanical Rooms	150	---
H. Stairs & Exits	100	300 on A = 4 in²

   Note #1: Unless otherwise noted, the indicated concentrated load has been assumed to be uniformly distributed over an area of 30" x 30".
   Note "a": In addition to the vertical live loads, horizontal swaying forces parallel and normal to the length of the seats shall also be considered by the Specialty Engineer, where appropriate. Design in accordance with ICC "Standard on Bleachers, Folding and Telescoping Seating and Grandstands".
4. LIVE LOAD REDUCTION: Live load reductions in accordance with IBC 1607.9 have been used with the following exceptions:
   A. Heavy live loads in excess of 100 PSF have not been reduced except for members supporting 2 or more floors have been reduced by a max. of 20%.
   B. Live loads for roof members have not been reduced.
5. IMPACT DESIGN: The live loads listed in the table above include allowance for impact. Impact has been considered in the design of the following elements:
   A. Members supporting elevator loads have been increased by 100% for impact.
6. PARTITION ALLOWANCE: A uniform partition allowance of 20 PSF has been used to account for the load of all floors where partition locations are subject to change, unless the specified live load exceeds 80 PSF.
7. COLLATERAL LOAD: Unless otherwise noted, a minimum uniform collateral load of 10 PSF has been used to account for ductwork, ceilings, sprinklers, lighting, etc. The collateral load is in addition to the weight of mechanical units, larger piping (greater than 4" diameter) and suspended fixtures or equipment that have been specifically accounted for in the design.
8. ROOF LIVE / SNOW LOADS: Gravity Live Loads used in the design of the roof structure meet or exceed the following table:
   A. Snow Load
      Ground Snow Load, p_g — 20 PSF
      Flat Roof Snow Load, p_f — 15.4 PSF
      Low-Slope Minimum Roof Snow Load, p_m — 22 PSF
      Snow Exposure Factor, C_e — 1.0
      Risk Category (IBC 2012, Table 1604.5) — III
      Snow Importance Factor, I_s — 1.1
      Thermal Factor, C_t — 1.0
   B. Minimum Roof Live Load — 20 PSF
   C. Overhanging Eaves, Canopies & Projections — 30 PSF
      1. Drift loads calculated in accordance with Section 7.7, ASCE 7. Specialty Engineers must consider snow drift loads in the design of pre-engineered trusses, frames, skylights, curtain walls, cold-formed metal framing, canopies, etc.
9. HANDRAILS AND GUARDS:
   A. Handrail Assemblies and Guards — 50 PLF applied in any direction; 200 LB concentrated load applied in any direction (non-concurrent with 50 PLF load).
   B. Components, Intermediate Rails, Balusters, Fillers, Etc. — 50 LBS horizontally applied normal load on an area not to exceed 1 SF, not superimposed with those of handrail assemblies.
10. LATERAL LOADS: Lateral loads were computed using the following criteria:
   A. Wind Load
      Ultimate Design Wind Speed, V_{ult} — 120 MPH
      Nominal Design Wind Speed, V_{asd} — 93 MPH
      Wind Exposure Category — C
      Risk Category (IBC 2012, Table 1604.5) — III
      Internal Pressure Coefficient, GC_{pi} — +/- 0.18
   B. Seismic Load
      Site Class — C
      Risk Category (IBC 2012, Table 1604.5) — III
      Seismic Importance Factor, I_e — 1.25
      Mapped Spectral Response Acceleration Parameter, S_S — 0.178g
      Mapped Spectral Response Acceleration Parameter, S_1 — 0.094g
      Design Spectral Response Acceleration Parameter, S_{DS} — 0.142g
      Design Spectral Response Acceleration Parameter, S_{D1} — 0.107g
      Seismic Design Category, SDC — B
      Analysis Procedure — Equivalent Lateral Force
      Seismic Force-Resisting System — Steel Systems not Specifically Detailed for Seismic Resistance
         Response Modification Coefficient, R — 3
         Seismic Response Coefficient, C_s — 0.0483
         Design Base Shear, V — 0.0483W
      Seismic Force-Resisting System — Intermediate Reinforced Masonry Shear Walls (Building Frame Systems)
         Response Modification Coefficient, R — 4
         Seismic Response Coefficient, C_s — 0.0363
         Design Base Shear, V — 0.0363W
11. SAFETY FACTORS: This structure has been designed with 'Safety Factors' in accordance with accepted principles of structural engineering. The fundamental nature of the 'Safety Factor' is to compensate for uncertainties in the design, fabrication, and erection of structural building components. It is intended that 'Safety Factors' be used such that the load-carrying capacity of the structure does not fall below the design load and that the building will perform under design load without distress. While the use of 'Safety Factors' implies some excess capacity beyond design load, such excess capacity cannot be adequately predicted and SHALL NOT BE RELIED UPON.

LINTEL SCHEDULE

1. Where lintels are not specifically shown or noted on the Structural or Architectural Drawings, provide the following lintels over all openings and recesses in both interior and exterior non-load-bearing walls.
   A) Brick:

Masonry Opening	Angle Size
Up to 5'-0"	L4x4x5/16
5'-1" to 7'-0"	L6x4x5/16
7'-1" to 12'-0"	L7x4x3/8

   All angles are LLV (long leg vertical) unless noted otherwise. Provide 1" bearing length per foot of span each end with minimum 8".
   B) Block: For openings up to 8'-0" long exposed in the finished room, use lintel block filled with grout. Grout all exposed joints and reinforce as follows:
      1. For 6" thick block: 1 - #5 bar.
      2. For 8" thick block: 2 - #5 bars.
      3. For 10" thick block: 2 - #6 bars.
      4. For 12" thick block: 2 - #6 bars.
   C) Block: For openings between 8'-1" & 12'-0" long exposed in the finished room, use lintel block filled with grout. Grout all exposed joints and reinforce per the "Long Masonry Lintel Detail" on the Typical Detail Drawings.
   D) Shore all block and steel angle lintels over 8'-0" in length until masonry has attained its specified design strength.

CAST IN PLACE CONCRETE

1. Details of fabrication of reinforcement, handling and placing of the concrete, construction of forms and placement of reinforcement not otherwise covered by the Plans and Specifications, shall comply with the ACI Code requirements of the latest revised date.
2. Cold weather concreting shall be in accordance with ACI 306. Cold weather is defined as a period when for more than 3 successive days the average daily air temperature drops below 40F and stays below 50F. The Contractor shall maintain a copy of this publication on site.
3. Hot weather concreting shall be in accordance with ACI 305. Hot weather is defined as any combination of the following conditions that tends to impair the quality of the freshly mixed or hardened concrete: high ambient temperature, high concrete temperature, low relative humidity, wind speed, or solar radiation. The Contractor shall maintain a copy of this publication on site.
4. A certified Testing Agency shall be retained to perform industry standard testing including measurement of slump, air temperature, concrete cylinder testing, etc. to ensure conformance with the Contract Documents. Submit reports to the Architect/Engineer.
5. FINISHING OF SLABS: After screeding, bull floating and floating operations have been completed, apply final finish as indicated below, and as described in the Division 3 Cast In Place Concrete Specification of the Project Manual.
   A. Floor Slabs — Hard Trowel Finish, unless noted otherwise
   B. Ramps, Stairs & Sidewalks — Broom Finish
   C. Surfaces to Recieve Topping Slabs — None - Float Finish
   D. Surfaces to recieve thick-set mortar beds or similar cementitious materials — None - Float Finish
   Sample Finishes: See the Specifications for sample and mockup requirements, if any. Coordinate floor finishes with the architectural Finish Plan.
   Floor Tolerances: See the Specifications for specified Ff and Fl tolerances. Ff and Fl testing shall be performed by the Testing Agency in accordance with ASTM E1155. Results, including acceptance or rejection of the work will be provided to the Contractor and the Architect/Engineer within 48 hours after data collection. Remedies for out-of-tolerance work shall be in accordance with the Specifications. When approved by the SER, measurement of the gaps beneath a 10-foot straight edge may be used in lieu of Ff and Fl testing. Approval must be obtained in writing prior to the beginning of concrete operations.
6. FINISHING OF FORMED SURFACES: Finish formed surfaces as indicated below, and as described in the Division 3 Cast In Place Concrete Specification of the Project Manual.
   A. Sides of Footings & Pile Caps — Rough Form Finish
   B. Sides of Grade Beams — Rough Form Finish
   C. Surfaces not exposed to public view — Rough Form Finish
   D. Surfaces exposed to public view — Smooth Form Finish
7. The Contractor shall consult with the Engineer before starting concrete work to establish a satisfactory placing schedule and to determine the location of construction joints so as to minimize the effects of shrinkage in the floor system.
8. Sawn or tooled control/contraction joints shall be provided in all slabs on grade. For a framed structure, joints shall be located on all column lines. Provide intermediate joints spaced at a maximum of 36 times the nominal slab thickness. Exterior slabs, and interior slabs without columns, shall also have a maximum joint spacing of 36 times the nominal slab thickness. Lay out joints so that maximum aspect ratio (ratio of long side to short side) does not exceed 1.5.
9. Where vinyl composition tile, vinyl sheet goods, thin-set epoxy terrazzo, or other similar material is the specified finish floor material, the Contractor shall coordinate the locations of control/contraction and construction joints with the Finish Flooring Contractor. Submit a dimensioned plan showing joint locations and proposed sequence of floor pours.
10. Unless specifically noted on the Plans, do not provide sawn control joints in composite and non-composite supported slabs on metal deck or in supported cast-in-place concrete slabs.
11. Joints in slabs to receive a finish floor may remain unfilled, unless required by the Finish Flooring Contractor. All exposed slabs shall be filled with sealant specified in Division 7, or as follows: All slabs in industrial, manufacturing, or warehouse applications subject to wheeled traffic shall be filled with specified epoxy resin sealant, all other joints shall be filled with specified elastometric sealant. Defer filling of joints as long as possible, preferably a minimum of 4 to 6 weeks after the slab has been cured. Prior to filling, remove all debris from the slab joints, the fill in accordance with the manufacturer's recommendations.
12. Refer to the Architectural Drawings for locations and details of reveals (1" maximum depth) in exposed walls.
13. Refer to the Architectural Drawings for chamfer requirements for corners of concrete. Where not indicated, provide 3/4" chamfers on exposed corners of concrete, except those abutting masonry.
14. Refer to the Architectural Drawings for exact locations and dimensions of recessed slabs, ramps, stairs, thickened slabs, etc. Slope slabs to drains where shown on the Architectural and Plumbing Drawings.
15. Sidewalks, stoops, aprons, drives, exterior retaining walls, and other site concrete are not indicated on the Structural Drawings. Refer to the Site/Civil and Architectural Drawings for locations, dimensions, elevations, jointing, and finishing details.

CONCRETE MIX CLASSES

FOOTINGS	
COMPRESSIVE STRENGTH	4000 PSI
MAXIMUM WATER/CEMENT RATIO	0.58
AIR CONTENT	0 - 3 PERCENT
WATER-REDUCING ADMIXTURE	OPTIONAL
SLUMP	4" +/- 1"
FOUNDATION WALLS, RETAINING WALLS, PIERS, GRADE BEAMS & TIE BEAMS	
COMPRESSIVE STRENGTH	4000 PSI
MAXIMUM WATER/CEMENT RATIO	0.50
AIR CONTENT	0 - 3 PERCENT
WATER-REDUCING ADMIXTURE	REQUIRED
SLUMP	4" +/- 1"
INTERIOR CONCRETE SLABS ON GRADE & SUSPENDED SLABS	
COMPRESSIVE STRENGTH	4000 PSI
MINIMUM CEMENTITIOUS MATERIAL CONTENT	517 LB/CU YD
AIR CONTENT	0 - 3 PERCENT
SLUMP	4" +/- 1"
WATER-REDUCING ADMIXTURE	REQUIRED
E5 INTERNAL CURE ADMIXTURE	REQUIRED
EXTERIOR CONCRETE SUBJECT TO FREEZE-THAW	
COMPRESSIVE STRENGTH	4000 PSI
MINIMUM CEMENTITIOUS MATERIAL CONTENT	564 LB/CU YD
AIR CONTENT	6 +/- 1 PERCENT
WATER-REDUCING ADMIXTURE	REQUIRED
SLUMP	5" +/- 1"
COARSE AGGREGATE	CRUSHED STONE
INCREASE COMPRESSIVE STRENGTH TO 4500 PSI FOR EXTERIOR REINFORCED CONCRETE SUBJECT TO THE USE OF DEICERS.	
LEAN CONCRETE FILL	
COMPRESSIVE STRENGTH	2000 PSI
MAXIMUM WATER/CEMENT RATIO	0.65
AIR CONTENT	OPTIONAL
WATER-REDUCING ADMIXTURE	OPTIONAL
SLUMP	4" +/- 1"
STAIR PAN FILL	
COMPRESSIVE STRENGTH	4000 PSI
MINIMUM CEMENTITIOUS MATERIAL CONTENT	564 LB/CU YD
AIR CONTENT	0 - 3 PERCENT
WATER-REDUCING ADMIXTURE	REQUIRED
SLUMP	4" +/- 1"
CLASS 'C' FLYASH	MIN. 10% / MAX 20%

1. SLUMP:
   MIXES CONTAINING TYPE A WRDA — 5" MAXIMUM
   MIXES CONTAINING MID-RANGE WRDA — 5 - 6½"
   MIXES CONTAINING HIGH-RANGE WRDA — 5 - 8"
2. SPECIFIED MINIMUM CEMENTITIOUS MATERIAL CONTENTS ARE BASED ON THE USE OF WATER REDUCING ADMIXTURES.
3. INCLUDE AN AIR-ENTRAINING ADMIXTURE FOR ALL CONCRETE EXPOSED TO FREEZING AND THAWING IN SERVICE AND FOR ALL CONCRETE EXPOSED TO COLD WEATHER DURING CONSTRUCTION, BEFORE ATTAINING ITS SPECIFIED DESIGN COMPRESSIVE STRENGTH. REF. ACI 306 FOR DEFINITION OF COLD WEATHER.
4. CLASS C FLY ASH MAY BE USED AS A CEMENT SUBSTITUTE WITH A MAXIMUM 20% SUBSTITUTION RATE ON A POUND-PER-POUND BASIS.
5. PROPORTION CONCRETE MIXES TO PROVIDE WORKABILITY AND CONSISTENCY TO PERMIT CONCRETE TO BE WORKED READILY INTO THE CORNERS AND ANGLES OF THE FORMS AND AROUND REINFORCEMENT BY THE METHODS OF PLACEMENT AND CONSOLIDATION TO BE EMPLOYED, WITHOUT SEGREGATION AND EXCESSIVE BLEEDING.
6. ADJUSTMENTS TO THE APPROVED MIX DESIGNS MAY BE REQUESTED BY THE CONTRACTOR WHEN JOB CONDITIONS, WEATHER, TEST RESULTS, OR OTHER CIRCUMSTANCES WARRANT. THESE REVISED MIX DESIGNS SHALL BE SUBMITTED TO THE ARCHITECT/ENGINEER FOR APPROVAL PRIOR TO USE.

CONCRETE REINFORCING

1. Reinforcement, other than cold drawn wire for spirals and welded wire fabric, shall have deformed surfaces in accordance with ASTM A305.
2. Reinforcing steel shall conform to ASTM A615, Grade 60, unless noted.
3. Welded wire fabric shall conform to ASTM A1064, unless noted.
4. Where hooks are indicated, provide standard hooks per ACI and CRSI for all bars unless other hook dimensions are shown on the plans or details.
5. Reinforcement in footings, walls and beams shall be continuous. Lap bars a minimum of 36 diameters, unless noted otherwise.
6. Reinforcement shall be supported and secured against displacement in accordance with the Concrete Reinforcing Steel Institute's "Manual of Standard Practice."
7. Details of reinforcing steel fabrication and placement shall conform to ACI 315 'Details and Detailing of Concrete Reinforcement' and ACI 315R 'Manual of Engineering and Placing Drawings for Reinforced Concrete Structures', unless otherwise indicated.
8. Spread reinforcing steel around small openings and sleeves in slabs and walls, where possible, and where bar spacing will not exceed 1.5 times the normal spacing. Discontinue bars at all large openings where necessary, and provide an area or reinforcement, equal to the interrupted reinforcement, in full length bars, distributing one-half each side of the opening. Where shrinkage and temperature reinforcement is interrupted, add (2) #5 x *opening dimension +4'-0"* on each side of the opening. Provide #5 x 4'-0" diagonal bars in both faces, at each corner of openings larger than 12" in any direction.
9. Provide standees for the support of top reinforcement for footings, pile caps, and mat foundations.
10. Provide individual high chairs, with support bars, as required for the support of top reinforcement for supported slabs. Do NOT provide standees.
11. Provide snap-on plastic space wheels to maintain required concrete cover for vertical wall reinforcement.
12. Where walls sit on column footings, provide dowels for the wall. Dowels shall be the same size and spacing as the vertical wall reinforcement, unless noted otherwise, with lab splices as shown on the application sections. Install dowels in the footing forms before concrete is placed. Do NOT stick dowels into footings after concrete is placed.
13. Field bending of reinforcing steel is prohibited, unless noted on the drawings.
14. Minimum concrete cover over reinforcing steel shall be as follows, unless noted otherwise on plan, section or note:

MINIMUM COVER FOR REINFORCEMENT

	MINIMUM COVER
SLABS AND JOISTS	
TOP & BOTTOM BARS FOR DRY CONDITIONS:	
#11 BARS & SMALLER	3/4"
#14 & #18 BARS	1 1/2"
FORMED CONCRETE SURFACES EXPOSED TO EARTH, WATER, OR WEATHER, AND OVER OR IN CONTACT WITH SEWAGE AND FOR BOTTOMS BEARING ON WORK MAT, OR SLABS SUPPORTING EARTH COVER:	
#5 BARS & SMALLER	1 1/2"
#6 THROUGH #18 BARS	2"
BEAMS & COLUMNS, FORMED	
FOR DRY CONDITIONS:	
STIRRUPS, SPIRALS & TIES	1 1/2"
PRINCIPAL REINFORCEMENT	2"
EXPOSED TO EARTH, WATER, SEWAGE, OR WEATHER:	
STIRRUPS & TIES	2"
PRINCIPAL REINFORCEMENT	2 1/2"
WALLS	
FOR DRY CONDITIONS:	
#11 BARS & SMALLER	3/4"
#14 & #18 BARS	1 1/2"
FORMED CONCRETE SURFACES EXPOSED TO EARTH, WATER, SEWAGE, WEATHER, OR IN CONTACT WITH GROUND	2"
FOOTINGS & BASE SLABS	
AT FORMED SURFACES & BOTTOMS BEARING ON CONCRETE WORK MAT	2"
AT UNFORMED SURFACES & BOTTOMS IN CONTACT WITH EARTH	3"
TOP OF FOOTINGS	SAME AS SLABS
OVER TOP OF PILES	2"

STRUCTURAL STEEL NOTES

1. Structural steel construction shall conform to the American Institute of Steel Construction "Specification for Structural Steel Bulidings".
2. All structural wide flange members and channels shall be ASTM A992, Fy = 50 ksi.
3. All plates, bars, angles, and rods shall be ASTM A572, Grade 50 unless noted.
4. All rectangular, square, and round structural tube members shall be ASTM A500, Grade C, Fy = 50 ksi unless noted.
5. Details for design, fabrication and erection of all structural steel shall be in accordance with the latest AISC Standards, unless otherwise noted or specified.
6. Provide temporary erection guying and bracing as required.
7. Unless otherwise shown or noted on the Drawings, provide 8" minimum bearing each end for all loose lintels and beams.
8. For loose lintels, masonry shelf angles and other such items generally not shown on the Structural Drawings, refer to the Architectural Drawings. See general notes on lintels this sheet for sizes, reinforcing, etc.
9. Steel columns below grade shall be encased in a minimum of 4" concrete or painted with 2 coats of asphaltum paint, unless otherwise shown.
10. Fabricate simple span beams not specifically noted to receive camber so that after erection, any minor camber due to rolling or shop assembly be upward.
11. Refer to the Division 5 Structural Steel Specification of the Project Manual for structural steel surface preparations and prime painting requirements.
12. The Erector shall shim between parallel roof beams and joists with differential mill and induced cambers for level deck bearing.
13. Provide cap plates/end plates to close off exposed, open ends of all tubular members, unless noted. Seal weld with partial penetration square groove welds for watertight condition.

STEEL JOIST NOTES

1. All steel joists shall be designed, fabricated and erected in accordance with the SJI Standard Specifications.
2. Joist bridging (if shown) is schematically indicated. Provide all bridging necessary to conform to SJI Specifications.
3. The ends of all bridging lines terminating at walls or beams shall be anchored to the wall or beam.
4. Joist bridging and connections shall be completely installed prior to placing any construction loads on the joists. Construction loading shall not exceed the joist design load.
5. All roof joists shall be capable of resisting the net uplift as noted on the Structural Drawings (min. 15 psf net). Provide an additional row of continuous horizontal bottom chord bridging at the first panel point location at each end of all roof joists.
6. Special joists (SP) shall be designed for the load designations specified on the Structural Drawings. Designs shall properly account for the distribution of concentrated loads, live loads and for the effect of openings. Designs are to meet the requirements of SJI.
7. Joists shall meet the following deflection criteria per SJI. Maximum live load deflection shall not exceed:
   A) Roofs: L/360
   B) Floors: L/360
8. The Joist Manufacturer shall submit calculations for all special joists to the SER for record purposes, prior to fabrication. These calculations shall bear the seal and signature of a Professional Engineer registered in the State of Indiana.
9. Joists on column centerlines shall have extended bottom chord connections for erection stability, unless otherwise noted. Do not connect bottom chord extensions, unless otherwise noted or shown.
10. Joists on or near column centerlines shall have field-bolted connections for erection stability, unless otherwise noted.
11. The Joist Manufacturer shall coordinate with the Structural Steel Fabricator for the design of all connections to supporting columns, beams, bearing seats, etc. prior to submittal of shop drawings.
12. All steel joists shall be furnished with standard SJI camber, unless noted otherwise.
13. All items suspended from joists such as catwalks, basketball goals, operable partitions, etc. should be installed after all dead loads of roofing, flooring, ceilings, etc. are installed.
14. All joists shall be shop primed in accordance with SJI requirements, unless noted otherwise. Color to match structural steel primer, unless approved in writing by the SER.
15. Provide sloped bearing ends where joist slope exceeds 1/4" per foot.
16. Do not field cut or alter joists without the written approval of the Joist Manufacturer.

STEEL STAIRS

1. Refer to the Design Criteria notes for live load and handrail requirements.
2. All stair designs shall be provided by the Stair Manufacturer/Fabricator's SSE and shall be stamped by a Professional Engineer registered in the State of Indiana. Stair designs shall be in accordance with all applicable code provisions of the IBC.
3. The Stair Manufacturer/Fabricator's SSE shall provide the SER with drawings showing location, direction and magnitudes of all stair load reactions on the building structure for approval, prior to fabrication.
4. The Stair Manufacturer/Fabricator shall coordinate the transition between the supported structural floor slab and the stair structure with the Structural Steel Fabricator, prior to fabrication.
5. Refer to the Architectural Drawings for stair width, rise, run, tread and riser geometry, handrail and guardrail design, shaft wall construction, etc.

STEEL CONNECTION NOTES

1. Typical beam-to-beam and beam-to-column connections shall be bearing type using A325 bolts, unless noted otherwise.
2. Shop connections, unless otherwise shown, may be either bolted or welded. All field connections shall be bolted unless otherwise shown on the Structural Drawings.
3. Connections shall be designed by the Steel Fabricator to support the reactions shown on the framing plan(s). Simple span connections without reactions listed on the Structural Drawings shall be designed by the Steel Fabricator's SSE in accordance with Table 3-6 of the AISC "Manual of Steel Construction, 14th Edition". For composite beams where reactions are not indicated, design connections for 75% of the Maximum Total Uniform Load ASD value for the applicable beam size and span given in Table 3-6. For non-composite beams, design connections for 50% of the tabulated ASD value. The minimum shear connection design load shall be 15 kips.
4. Submit calculations for connections not detailed on the Structural Drawings and not covered by the AISC Tables, including but not limited to:
   A. Moment Connections.
   B. Bracing Connections including Collectors and Drag Struts
   C. Skewed Shear Connections.
   D. Girder and Truss Splices.
   E. Truss-to-Column and Truss-to-Truss Connections.
   F. Truss Web-to-Chord and Web-to-Gusset Connections.
5. All beam-to-beam connections shall be double angle, unless shown or noted otherwise.
6. All beam-to-column connections shall be at the column centerline, unless shown or noted otherwise. Shear tab connections to tube columns are permitted unless otherwise noted or detailed.
7. Typical bearing-type beam-to-beam, and beam-to-column field-bolted connections may be tightened to the snug-tight condition, unless otherwise shown or noted.
8. Bolted connections in moment frames, bracing connections, hangers and stub columns, crane connections, and those designated PT (pretensioned) on the Drawings shall be pretensioned joints utilizing tension-control (TC) bolts or direct tension indicators. Holes for bolts in pretensioned joints shall be 1/16" larger than the bolt diameter. All pretensioned joints must be inspected by the Testing Agency.
9. Connect bracing members for two components of stress unless otherwise approved by the SER. Provide a minimum 2-bolt or welded field connection.
10. Locate centerlines of all vertical bracing members on column centerlines in vertical plane and on column and beam centerlines in horizontal plane, unless otherwise shown on the Structural Drawings.
11. All welding shall be in conformance with AWS D1.1, using E70XX electrodes, unless shown or noted otherwise. Welding, both shop and field, shall be performed by welders certified for the weld types and positions involved according to the current edition of AWS D1.1. Perform all AESS welds with care to provide a clean, uniform appearance.
12. Backup bars required for welded connections shall be continuous.
13. Holes in steel shall be drilled or punched. All slotted holes shall be provided with smooth edges. Burning of holes in structural steel shall not be allowed without approval of the SER.
14. The minimum thickness of all connection material shall be 5/16", unless noted.
15. Continuous bent plate and angle slab closures, roof edges, diaphragm chords, etc. around perimeter of the floor and roof, as well as around openings shall be welded with a minimum 1/4" fillet weld x 3" long at 12" o.c., top & bottom, unless noted otherwise. Butt weld joints in continuous diaphragm chords for continuity. For continuous perimeter angles and bent plates perpendicular to and connected to the top chords of joists, provide a minimum 3" of 1/4" weld at each joist. Continuous angle and bent plate closures may be shop-applied to the supporting structural members only when requested and approved in writing by the SER.
16. A qualified independent Testing Agency shall be retained to perform inspection and testing of structural steel field weldments as follows:

WELD INSPECTION SCHEDULE

WELD TYPE	VT	MT	UT	PT	RT	COMMENTS
FILLET (SINGLE PASS)	25%	--	--	--	--	ROOT PASS AND FINISHED WELD
FILLET (MULTIPLE PASS)	50%	25%	--	--	--	
FLARE BEVEL/ FLARE V	25%	--	--	--	--	
GROOVE (PARTIAL PENETRATION)	100%	--	100%	--	--	REFERENCE NOTE 'E' BELOW
GROOVE (FULL PENETRATION)	100%	--	100%	--	--	ALL FULL PENETRATION WELDS

A) Test procedures:
   VT = Visual Test (inspection)
   MT = Magnetic Particle Test: ASTM E109, cracks or incomplete fusion or penetration not acceptable.
   UT = Ultrasonic Test: ASTM E164.
   PT = Penetrant Test: ASTM E165.
   RT = Radiographic Test: ASTM E94 and ASTM E142, min. quality level 2-21.
B) Acceptance standards in AWS D1.1 shall be followed for each test procedure.
C) Test procedures may be substituted to meet feasibility requirements of test based upon weld geometry or other factors with the approval of the SER.
D) Samples shall occur at random locations; additional tests may be required at locations noted on the Drawings.
E) Groove welds include square, bevel, V, U, and J grooves including single and double pass types.
F) Partial penetration square groove welds at end seal plates of tubular members do not require inspection.
G) Weld Procedure Specifications (WPS) shall be produced and maintained in accordance with AWS D1.1. The independent Testing Agency shall have access to all WPS's during the course of testing and inspection.
H) For highly-restrained welded joints, especially in thick plates and/or heavy structural shapes, detail the welds so that shrinkage occurs as much as possible in the direction the steel was rolled. Refer to the AISC Manual for preferred welded-joint arrangements that reduce the possibility for lamellar tearing. Members scheduled to receive highly-restrained connections shall be tested by the independent Testing Agency by Ultrasonic Testing prior to commencing welding.
I) In addition to inspection requirements for fillet welds in Table above, 100% of field welding of diagonal bracing members to gusset plates shall be visually inspected (VT).

STEEL DECK NOTES

1. All steel deck material, fabrication and installation shall conform to the Steel Deck Institute "SDI SPECIFICATIONS AND COMMENTARY" and "CODE OF RECOMMENDED STANDARD PRACTICE," current edition, unless noted otherwise.
2. Provide members for deck support at all deck span changes. Provide L3x3x3/16 deck support at all columns where required.
3. All deck shall be provided in a minimum of 3-span lengths where possible.
4. All welding of steel deck shall be in conformance with AWS Specification D1.3. Provide welding washers for all floor decks less than 22 gauge in thickness. All roof decks shall be fastened with mechanical fasteners. Submit fastener design data to the SER for review.
5. Mechanical fasteners may be used in lieu of welding floor decks, provided that fasteners meet or exceed the strength of specified welds. Submit fastener design data to the SER for review.
6. Substitution of fiber secondary reinforcement for welded wire fabric on supported slabs is prohibited.
7. Do not suspend any items, such as ductwork, mechanical and electrical fixtures, ceilings, etc. from steel deck.
8. Roof deck sidelaps shall be attached at ends of cantilevers and at a maximum spacing of 12" o.c. from cantilevered deck ends. The roof deck must be completely fastened to the supports and at sidelaps before any load is applied to the cantilever.
9. Submit shop drawings for review of general conformance to the design concept in accordance with the Specifications in the Project Manual. Erection drawings shall show type of deck, shop finish, accessories, method of attachment, edge details, deck openings and reinforcement, and sequence of installation.
10. Installation holes shall be sealed with a closure plate 2 gauges thicker than deck and mechanically fastened to the deck. Steel deck holes visible from below will be rejected. Deck units that are bent, warped, or damaged in any way which would impair the strength and appearance of the deck shall be removed from the site.
11. Where gauge metal pourstops are indicated, supply pourstops designed to meet or exceed the gauges listed in the SDI Pourstop Selection Table (min. 18 ga.) as required for slab depth, concrete weight, and cantilever distance, unless noted otherwise.
12. The Erector shall shim between parallel roof beams and joists with differential mill and induced cambers for level deck bearing.

COLD-FORMED (LIGHT GAUGE) METAL FRAMING NOTES

1. All cold-formed steel framing members, their design, fabrication, and erection shall conform to the "SPECIFICATION FOR THE DESIGN OF COLD-FORMED STEEL STRUCTURAL MEMBERS" of the latest edition of the AISI.
2. All framing members shall be formed from steel conforming to ASTM A653, with a minimum yield strength as follows:
   A. 12, 14 & 16 gauge members: Fy = 50ksi
   B. 18, 20 gauge members: Fy = 36ksi
3. All framing members shall be galvanized with a G60 coating meeting the requirements of ASTM A653, unless otherwise indicated.
4. Members shall be the Manufacturer's standard 'C'-Shaped studs/joists of the size, flange width, and gauge indicated. All members shall have a minimum flange lip return of 1/2" and satisfy the minimum properties in accordance with the Steel Stud Manufacturers Association (SSMA).
5. The gauge of all tracks shall match the gauge of the associated stud or joist, unless otherwise noted.
6. All welding shall be in accordance with AWS Specification D1.3. No welding of members less than 14 gauge in thickness is permitted without the approval of the SER. All welding shall be performed by certified welders. All welds shall be touched up with zinc rich paint in accordance with ASTM A780.
7. Provide bridging for all load-bearing studs at a maximum spacing of 48" o.c.
8. Provide bridging for all non-load-bearing curtain wall studs at a maximum spacing of 54" o.c. Locate one row of bridging within 18" of the top track when a single deep-leg deflection track is utilized.
9. Provide bridging for joists and rafters at midspan and at a maximum spacing of 6'-0" o.c., unless noted otherwise. All bridging shall be installed prior to the application of any loading. Connect bridging to each member by clip angles, or other approved method per the Manufacturer's requirements.
10. Provide web stiffeners at joist and rafter bearings in accordance with the Manufacturer's requirements.
11. All axially loaded studs shall have full bearing against the track web, prior to stud and track alignment. Splices in axially loaded studs are not permitted.
12. Provide the Manufacturer's standard track, clip angles, bracing, reinforcement, fasteners, and accessories as recommended by the Manufacturer for the application indicated and as needed to provide a complete framing system. Unless otherwise indicated, install the metal framing system in accordance with the Manufacturer's shop drawings, written instructions and recommendations.
13. Install supplementary framing, blocking, and bracing in metal framing system wherever walls or partitions are indicated to support fixtures, equipment, services, casework, heavy trim and furnishings, and similar work requiring attachment to the wall or partition. Where type of supplementary support is not otherwise indicated, comply with the stud manufacturer's recommendations and industry standards in each case, considering weight or loading resulting from the item supported.
14. All field-cutting of studs must be done by sawing or shearing. Torch cutting of cold-formed members is not allowed.
15. No notching or coping of studs is allowed, unless explicitly shown on the design or shop drawings. All field-cut holes must be reinforced.
16. The Framing Contractor is to ensure punch out alignment when assembling lateral bracing/bridging and field-cutting studs to length. Lateral bracing/bridging must be installed at the time the wall is erected.
17. Temporary bracing shall be provided and remain in place until work is completely stabilized.
18. Use a minimum of three studs at the corners of all exterior walls.
19. Use a minimum of three studs at the corners and intersections of all load-bearing walls.
20. All headers and built-up beams must be constructed of UNPUNCHED material only. Install insulation in built-up exterior framing members, such as headers, sills, boxed joists, and multiple stud jambs at openings, that are inaccessible upon completion of framing work.
21. Shop Drawings: Show layout, spacings, sizes, thicknesses, and types of cold-formed metal framing; show fastening and anchorage details, including mechanical fasteners. Show reinforcing channels, opening framing, supplemental framing, strapping, bracing, bridging, splices, accessories, connection details, and attachment to adjoining work.
22. For cold-formed metal framing indicated to comply with design loads, include structural analysis data signed and sealed by the qualified professional engineer (SSE) responsible for their preparation.
23. Structural Performance: Provide cold-formed metal framing capable of withstanding design loads within limits and under conditions indicated.
   A. Design Loads: Reference the Design Criteria Notes.
   B. Deflection Limits: Design framing systems to withstand the design loads without deflections greater than the following:
      1. Wall Framing: Horizontal deflection of 1/240 of the wall height for walls with flexible finishes, e.g. metal siding, wood siding, EIFS, etc.
      2. Wall Framing: Horizontal deflection of 1/360 of the wall height for walls with cementitious finishes, e.g. cement plaster.
      3. Wall Framing: Horizontal deflection of 1/600 of the wall height for walls with masonry veneer finishes.
      4. Floor Joist Framing: Vertical deflection of 1/480 of the span under live load. Limit deflection under total load (dead + live) to 1/360 of the span.
      5. Roof Framing: Vertical deflection of 1/360 of the span under live/snow load. Limit deflection under total load (dead + live) to 1/240 of the span.
24. Design framing systems to provide for movement of framing members without damage or overstressing, sheathing failure, undue strain on fasteners and anchors, or other detrimental effects when subject to an ambient temperature change of not less than 120 degrees F.
25. Design framing system to maintain clearances at openings, to allow for construction tolerances, and to accommodate live and/or snow load deflection of primary building structure as follows: Upward and downward movement of 3/4 inch.
26. Design exterior non load-bearing curtain wall framing to accommodate horizontal deflection without regard for contribution or sheathing materials.

SPECIALTY STRUCTURAL ENGINEERING (SSE)

1. A Specialty Structurally Engineer (SSE) is defined as a Professional Engineer licensed in the State of Indiana, not the Structural Engineer of Record (SER), who performs Structural Engineering functions necessary for the structure to be completed and who has shown experience and/or training in the specific speciality.
2. It is the SSE's responsibility to review the Construction Drawings and Specifications to determine the appropriate scope of engineering.
3. It is the intent of the Drawings and Specifications to provide sufficient information for the SSE to perform his design and analysis. If the SSE determines there are details, features, or unanticipated project limits which conflict with the engineering requirements as described in the project documents, the SSE shall in a timely manner contact the SER for resolution of conflicts.
4. The SSE shall forward documents to the SER for review. Such documents shall bear the stamp of the SSE and include:
   A. Drawings introducing engineering input, such as defining the configuration or structural capacity of structural components and/or their assembly into structural systems.
   B. Calculations.
   C. Computer printouts which are an acceptable substitute for manual calculations provided they are accompanied by sufficient design assumptions and identified input and output information to permit their proper evaluation. Such information shall bear the stamp of the SSE as an indication that said SSE has accepted responsibility for the results.
5. Contractors are referred to the specific technical specification sections and the structural drawings for those elements requiring Specialty Structural Engineering. Examples of components requiring Specialty Structural Engineering include, but are not limited to the following:
   A. Temporary and Permanent Retention Systems, if required.
   B. Shoring and Bracing Systems, if required.
   C. Structural Steel Connections.
   D. Steel Joist Systems.
   E. Steel Stairs.
   F. Handrails and Guards.
   G. Cold-Formed Steel Framing.
   H. Curtain Wall Systems.
   I. Prefabricated Wood Trusses.
   J. Prefabricated Wood Wall Panels.
6. When modifications are proposed to elements under the design and certification of the SSE, written authorization by the SSE must be obtained and submitted to the SER for review prior to performing the proposed modification.

⚠1 REINFORCED MASONRY NOTES

1. All construction of reinforced masonry walls to be in accordance with the Building Code Requirements For Concrete Masonry Structures (ACI 530 / TMS 402) and Commentary.
   A. f'_m = 2000 PSI
   B. Maximum height of masonry lift: 5'-0"
   C. Maximum height of grout lift: 5'-0"
   D. See the Specifications for additional masonry wall information.
2. CONCRETE BLOCK: Minimum compressive test strength on the net cross-sectional area: 2800 PSI.
3. MORTAR: Type S required.
4. GROUT: ASTM C476, 2500 PSI with a slump of 8" min. and 10" max.
5. REINFORCING: f_y = 60,000 PSI with a min. lap of 48 bar diameters.
6. WEIGHT CLASSIFICATION: Use Normal Weight CMU below grade. Use Lightweight CMU above grade, unless otherwise noted or approved.

BCSC TOGETHER WE LEARN

CSO
8831 Keystone Crossing, Indianapolis, IN 46240
317.848.7800 | csoinc.net
© 2018 CSO Architects, Inc. All Rights Reserved
Lynch, Harrison & Brumleve, Inc.

PROJECT:
BARTHOLOMEW CONSOLIDATED SCHOOL CORPORATION
MAPLE GROVE ELEMENTARY
TIPTON LAKES BLVD, COLUMBUS, IN 47201

SCOPE DRAWINGS:
These drawings indicate the general scope of the project in terms of architectural design concept, the dimensions of the building, the major architectural elements and the type of structural, mechanical and electrical systems.
The drawings do not necessarily indicate or describe all work required for full performance and completion of the requirements of the Contract.
On the basis of the general scope indicated or described, the trade contractors shall furnish all items required for the proper execution and completion of the work.

REVISIONS:

1	ADD #2	06/17/25

ISSUE DATE	DRAWN BY	CHECKED BY
05/30/2025	NMA/JRO/MDL	MDL

DRAWING TITLE:
GENERAL STRUCTURAL NOTES

CERTIFIED BY:
MARK D. LAVIER
REGISTERED
PE19400114
STATE OF INDIANA
PROFESSIONAL ENGINEER

DRAWING NUMBER
S001

PROJECT NUMBER
2024022

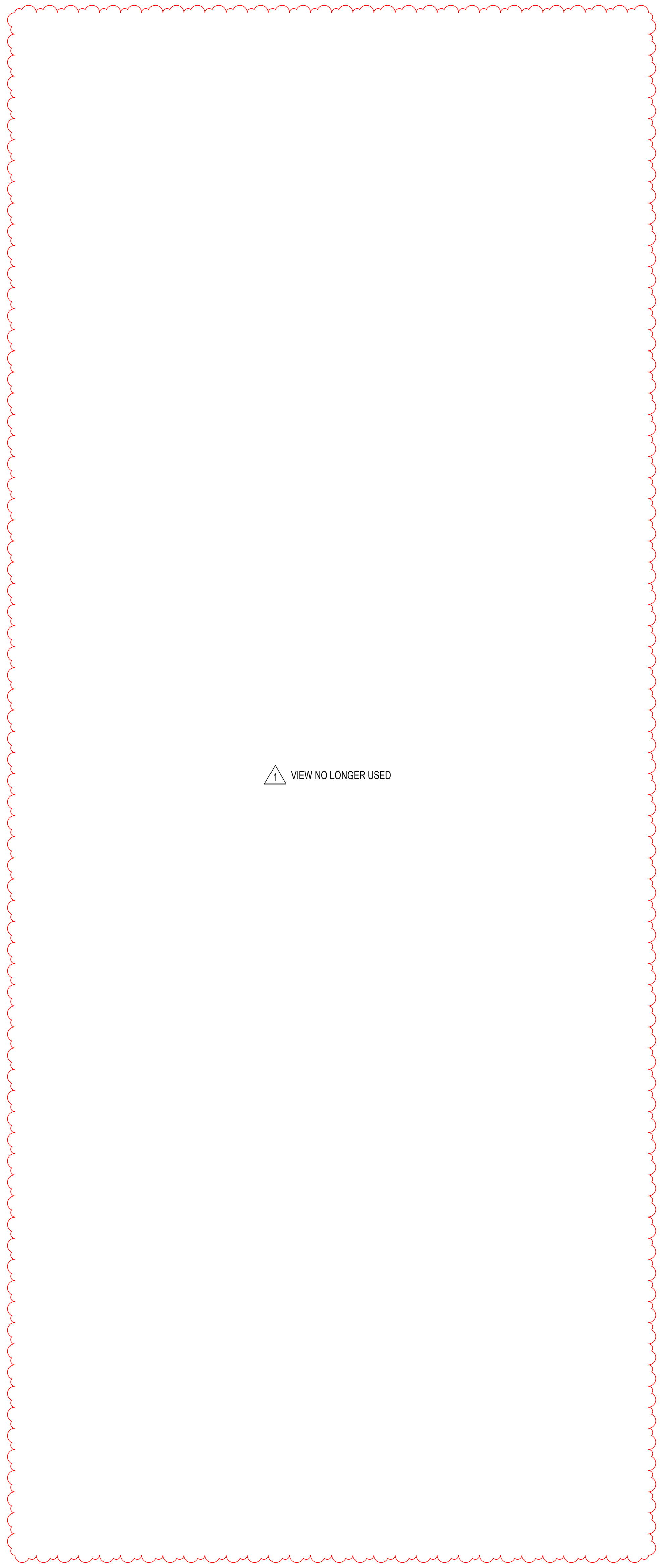

COLUMN FOOTING SCHEDULE

FOOTING MARK	FOOTING SIZE WIDTH	x LENGTH	x DEPTH	REINFORCING (EACH WAY, U.N.O.)
F3.0	3'-0"	3'-0"	1'-8"	(4) #5 x 2'-6"
F4.0	4'-0"	4'-0"	1'-8"	(5) #5 x 3'-6"
F5.0	5'-0"	5'-0"	1'-8"	(6) #5 x 4'-6"
F6.0	6'-0"	6'-0"	1'-8"	(8) #5 x 5'-6"
F6.0T	6'-0"	6'-0"	2'-0"	(7) #5 x 5'-6" T&B
F7.0	7'-0"	7'-0"	1'-8"	(7) #6 x 6'-6"
F7.0T	7'-0"	7'-0"	2'-0"	(6) #6 x 6'-6" T&B
F8.0	8'-0"	8'-0"	1'-8"	(9) #6 x 7'-6"
F8.0T	8'-0"	8'-0"	2'-0"	(8) #6 x 7'-6" T&B
F9.0	9'-0"	9'-0"	1'-10"	(8) #7 x 8'-6"
F9.0T	9'-0"	9'-0"	2'-0"	(8) #7 x 8'-6" T&B
F10.0	10'-0"	10'-0"	2'-0"	(9) #7 x 9'-6"
F10.0T	10'-0"	10'-0"	2'-0"	(9) #7 x 9'-6" T&B
F11.0	11'-0"	11'-0"	2'-2"	(11) #7 x 10'-6"
F11.0T	11'-0"	11'-0"	2'-2"	(11) #7 x 10'-6" T&B
F12.0	12'-0"	12'-0"	2'-4"	(10) #8 x 11'-6"
F12.0T	12'-0"	12'-0"	2'-4"	(10) #8 x 11'-6" T&B

NOTES:
1. CENTER FOOTINGS BENEATH COLUMNS, U.N.O.
2. ALL FOOTINGS MUST BE BOARD-FORMED, UNLESS APPROVED.
3. INCREASE FOOTING DEPTH WHERE REQ'D TO ENCASE COLUMN ANCHOR RODS.
4. PROVIDE BOTH TOP & BOTTOM REINF. AT FOOTINGS WITH SUFFIX 'T' OR 'SP'.

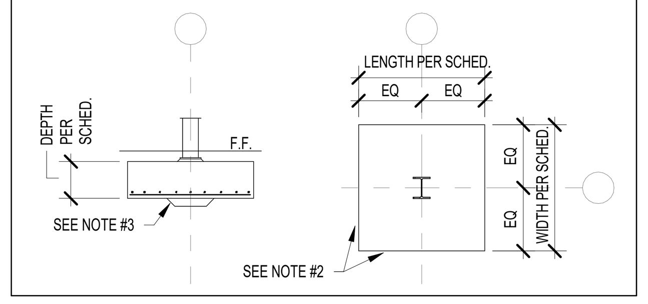

WALL FOOTING SCHEDULE

FTG. MARK	FOOTING SIZE WIDTH	DEPTH	FOOTING REINFORCING LONGITUDINAL	TRANSVERSE
WF24	2'-0"	1'-0"	(2) #5 x CONTINUOUS	#4 x 1'-6" @ 96" O.C.
WF30	2'-6"	1'-2"	(3) #5 x CONTINUOUS	#4 x 2'-0" @ 96" O.C.
WF36	3'-0"	1'-2"	(3) #5 x CONTINUOUS	#4 x 2'-6" @ 96" O.C.
WF42	3'-6"	1'-2"	(4) #5 x CONTINUOUS	#5 x 3'-0" @ 12" O.C.
WF48	4'-0"	1'-2"	(4) #5 x CONTINUOUS	#5 x 3'-6" @ 12" O.C.

NOTES:
1. CENTER FOOTINGS BENEATH WALLS, U.N.O.
2. REF. S401 FOR TYP. WALL FOOTING CONSTRUCTION JOINT DETAIL.
3. LAP FOOTING REINF. A MIN. OF 36 BAR DIAMETERS.
4. PROVIDE BOTH TOP & BOTTOM REINF. AT FOOTINGS DENOTED WITH SUFFIX 'T' ON PLAN.

CONCRETE PIER SCHEDULE

PIER MARK	PIER SIZE L.	W.	PIER REINFORCING VERTICALS	TIES - SIZE & SPACING	DETAIL	CRITICAL HEIGHT
P24	2'-0"	2'-0"	(8) #6	#4 @ 12" OC (REF. NOTE #3)	B	≤ 2'-8"
			(4) #8	#4 @ 12" OC (REF. NOTE #3)	A	> 2'-8"

1. PROVIDE MIN. 1½" CLEAR TO PIER TIES.
2. "CRITICAL HEIGHT" DENOTES HEIGHT ABOVE WHICH LARGER DIAMETER VERTICALS WITH FEWER TIES MAY BE USED. REFER TO FOUNDATION PLAN(S) FOR T/P & T/F ELEVATIONS.
3. TYPICAL TIE SPACING, UNLESS NOTED OTHERWISE: REF. DETAIL **20/S401** FOR ADDITIONAL TIE SPACING REQUIREMENTS AT TOP & BOTTOM OF PIER. REQUIREMENTS VARY WITH TIE BAR SIZE AND COLUMN ANCHOR ROD DIAMETER.
4. DOWELS TO FUNCTION AS PIER VERTICALS FOR PIERS LESS THAN OR EQ. TO 5'-0" H. PROVIDE SEPARATE DOWELS & VERTICALS FOR PIERS GREATER THAN OR EQUAL TO 5'-0" H, UNLESS APPROVED.
5. CONTACT ENGINEER FOR DIRECTION IF COLUMN ANCHOR RODS FOUL WITH PIER TIES OR VERTICALS.
6. WHERE PIERS ARE INTEGRAL WITH CAST-IN-PLACE CONCRETE WALLS, CONTINUE HORIZONTAL WALL REINFORCING THROUGH PIERS.
7. PROVIDE STANDARD 90° HOOK AT TOP OF PIER VERTICALS AT ALL PIERS SUPPORTED BY A FOOTING WITH TOP REINFORCING.

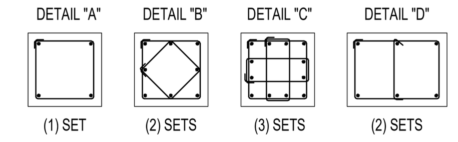

TRENCH FOOTING SCHEDULE

FTG. MARK	FOOTING SIZE WIDTH	DEPTH	FOOTING REINFORCING LONGITUDINAL	TRANSVERSE
TF24	2'-0"	1'-8"	(3) #5 x CONTINUOUS	#3 x 1'-6" @ 96" O.C.
TF30	2'-6"	1'-8"	(4) #5 x CONTINUOUS	#3 x 2'-0" @ 96" O.C.
TF36	3'-0"	1'-8"	(5) #5 x CONTINUOUS	#4 x 2'-6" @ 96" O.C.
TF42	3'-6"	1'-8"	(4) #6 x CONTINUOUS	#4 x 3'-0" @ 12" O.C.
TF48	4'-0"	1'-8"	(5) #6 x CONTINUOUS	#4 x 3'-6" @ 12" O.C.

1. CENTER FOOTINGS BENEATH WALLS, U.N.O.

2. TRENCH FOOTINGS MAY BE CAST DIRECTLY AGAINST SOIL WITHOUT FORMING WHERE EXISTING SOIL CONDITIONS PERMIT. FORM TOP OF TRENCH FOOTINGS WHERE SOIL HAS SLOUGHED SIGNIFICANTLY, WHERE GRADE IS LOWER THAN THE INDICATED TOP OF FOOTING ELEVATION, OR WHEREVER TRENCH FOOTING WOULD INTERFERE WITH THE INSTALLATION OF DOWNSPOUTS, CONDUIT, BOLLARDS, ETC. COORDINATE WITH MECHANICAL, ELECTRICAL, PLUMBING & SITE/CIVIL DRAWINGS.

3. INTERIOR OF TRENCH FOOTING SHALL BE FORMED WITH RIGID INSULATION. TAKE CARE IN TRIMMING INTERIOR FACE OF EXCAVATION TO MINIMIZE GAPS BEHIND THE INSULATION. FILL WITH #8 CRUSHED STONE, TAMPING AND COMPACTING WHERE SPACE PERMITS.

CONCRETE TIE BEAM SCHEDULE

TIE BEAM MARK	TIE BEAM SIZE WIDTH	DEPTH	TIE BEAM REINFORCING LONGITUDINAL	TIES/STIRRUPS	DETAIL
TB24x24	2'-0"	2'-0"	(10) #7	#4 @ 16" OC	A

1. PROVIDE MIN. 1½" CLEAR TO TIES.
2. FIRST (3) TIES TO BE SPACED AT 8" OC.
3. EXTEND LONGITUDINAL REINF. PAST COLUMN ANCHOR RODS TO FAR SIDE OF FOOTING OR PIER & PROVIDE STANDARD 90° HOOK.
4. TIE BEAMS MUST BE BOARD-FORMED, UNLESS APPROVED.

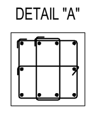

ABBREVIATION LEGEND

ABBR	DEFINITION	ABBR	DEFINITION	ABBR	DEFINITION
AB	ANCHOR BOLT	GA	GAGE (GAUGE)	PAF	POWDER-ACTUATED FASTENER
ABV	ABOVE	GALV	GALVANIZED	PARTN	PARTITION
ACI	AMERICAN CONCRETE INSTITUTE	GB	GRADE BEAM	PC	PRECAST CONCRETE
ACIP	AUGERED CAST IN PLACE PILE	GC	GENERAL CONTRACTOR	PCF	POUNDS PER CUBIC FOOT
ADDL	ADDITIONAL	GLULAM	GLUE LAMINATED WOOD	PCI	PRECAST CONCRETE INSTITUTE
ADDM	ADDENDUM	GRAN	GRANULAR	PDF	POWER-DRIVEN FASTENER
ADJ	ADJUSTABLE	GWB	GYPSUM WALL BOARD	PERIM	PERIMETER
AESS	ARCHITECTURALLY EXPOSED STRUCT. STL.			PL	PLATE
AFF	ABOVE FINISHED FLOOR			PLBG	PLUMBING
AGG	AGGREGATE	H	HIGH (HEIGHT)	PLF	POUNDS PER LINEAL FOOT
AISC	AMERICAN INSTITUTE OF STEEL CONSTR'N.	HAS	HEADED ANCHOR STUD	PLYWD	PLYWOOD
AISI	AMERICAN IRON & STEEL INSTITUTE	HC	HOLLOW CORE	PNL	PANEL
ALT	ALTERNATE	HD	HOLD DOWN	PREFAB	PREFABRICATED
ANCH	ANCHORAGE	HK	HOOK	PROJ	PROJECTION
ANSI	AMERICAN NATIONAL STANDARDS INSTITUTE	HORIZ	HORIZONTAL	PSF	POUNDS PER SQUARE FOOT
APA	AMERICAN PLYWOOD ASSOCIATION	HP	HIGH POINT	PSI	POUNDS PER SQUARE INCH
APPROX	APPROXIMATE			PSL	PARALLEL STRAND LUMBER
ARCH	ARCHITECT(URAL)			PPT	PRESSURE PRESERVATIVE TREATED
ASSY	ASSEMBLY	IBC	INTERNATIONAL (INDIANA) BUILDING CODE	PSC	PRESTRESSED CONCRETE
ASTM	AMERICAN SOCIETY FOR TESTING & MATLS.	ID	INSIDE DIAMETER	PT	POST TENSIONED
AVG	AVERAGE	IF	INSIDE FACE	PTD	PAINTED
AWS	AMERICAN WELDING SOCIETY	INCR	INCREASE	PRTN	PARTITION
		INFO	INFORMATION	PVMT	PAVEMENT
		INDOT	INDIANA DEPARTMENT OF TRANSPORTATION		
B/'X'	BOTTOM OF REFERENCED ITEM	INSUL	INSULATE (INSULATION)		
BB	BOND BEAM	INT	INTERIOR	QTR	QUARTER
BFF	BELOW FINISHED FLOOR	INV	INVERT	QTY	QUANTITY
BLDG	BUILDING	ISO	ISOLATION		
BLKG	BLOCKING	IT	INVERTED TEE BEAM		
BLW	BELOW			R	RADIUS
BM	BEAM			RB	RECTANGULAR BEAM (PRECAST)
BOT	BOTTOM	JBE	JOIST BEARING ELEVATION	REF	REFER TO (REFERENCE)
BP	BASE PLATE	JST	JOIST	REQD	REQUIRED
BRDG	BRIDGING	JT	JOINT	REV	REVISION (REVISED)
BRG	BEARING			RF	ROOF
BS	BOTH SIDES			RO	ROUGH OPENING
BTWN	BETWEEN	KIP	1,000 POUNDS	RTU	ROOF TOP UNIT
		KO	KNOCK OUT	RTN	RETURN
		KSF	KIPS PER SQUARE FOOT	RW	RETAINING WALL
C/C	CENTER TO CENTER	KSI	KIPS PER SQUARE INCH		
CAIS	CAISSON				
CAPY	CAPACITY			SBCA	STRUCTURAL BUILDING COMPONENTS ASSN.
CANT	CANTILEVER	L	LONG (LENGTH)	SCT	STRUCTURAL CLAY TILE
CB	CONCRETE BEAM	Ld	TENSION DEVELOPMENT LENGTH	SCHED	SCHEDULE
CC	CONCRETE COLUMN	LB	'L' BEAM	SDI	STEEL DECK INSTITUTE
CFS	COLD-FORMED STEEL	LBS	POUNDS	SE	SLAB EDGE
CIP	CAST IN PLACE	LGSF	LIGHT GAUGE STEEL FRAMING	SER	STRUCTURAL ENGINEER OF RECORD
CJ	CONTROL JOINT	LL	LIVE LOAD	SECT	SECTION
CNJ	CONSTRUCTION JOINT	LLH	LONG-LEG HORIZONTAL	SHT	SHEET
CL	CENTERLINE	LLO	LONG-LEG OUTSTANDING	SIM	SIMILAR
CLR	CLEAR(ANCE)	LLV	LONG-LEG VERTICAL	SJI	STEEL JOIST INSTITUTE
CMU	CONCRETE MASONRY UNIT	LNTL	LINTEL	SL	SLOPE
COL	COLUMN	LONG	LONGITUDINAL	SOG	SLAB ON GRADE
COLL	COLLATERAL	LP	LOW POINT	SPA	SPACE (S)(D)(ING)
CONC	CONCRETE	LVL	LAMINATED VENEER LUMBER	SPECS	SPECIFICATIONS
CONSTR	CONSTRUCTION	LW	LONG WAY	SQ	SQUARE
CONT	CONTINUOUS	LWC	LIGHTWEIGHT CONCRETE	SS	STAINLESS STEEL
CRSI	CONCRETE REINFORCING STEEL INSTITUTE			SSE	SPECIALTY STRUCTURAL ENGINEER
CTR	CENTER			STD	STANDARD
CTRD	CENTERED	MATL	MATERIAL	STIFF	STIFFENER
CW	CONCRETE WALL	MAX	MAXIMUM	STL	STEEL
		MC	MOMENT CONNECTION	STR	STRENGTH
		MECH	MECHANICAL	STRUCT	STRUCTURAL
D	DEEP (DEPTH)	MEZZ	MEZZANINE	SW	SHORT WAY
DBA	DEFORMED BAR ANCHOR	MFR	MANUFACTURER	SW	SHEAR WALL (OCCASIONAL)
DEG	DEGREE	MIN	MINIMUM	SYMM	SYMMETRICAL
DIA	DIAMETER	MISC	MISCELLANEOUS		
DIAG	DIAGONAL	MO	MASONRY OPENING		
DIM	DIMENSION	MOM	MOMENT	T/'X'	TOP OF REFERENCED ITEM
DL	DEAD LOAD	MTL	METAL	T&B	TOP AND BOTTOM
DN	DOWN			T&G	TONGUE & GROOVE
DP	DRILLED PIER			TB	TIE BEAM
DT	DOUBLE TEE	NDS	NATIONAL DESIGN SPEC'N. FOR WOOD	TD	TRENCH DRAIN
DTL	DETAIL	NIC	NOT IN CONTRACT	TEMP	TEMPERATURE
DWG	DRAWING	NO	NUMBER	TF	TRENCH FOOTING
DWL	DOWEL	NOM	NOMINAL	THK	THICK(NESS)
		NRC	NOISE REDUCTION COEFFICIENT	TOPG	TOPPING
		NS	NEAR SIDE	TPI	TRUSS PLATE INSTITUTE
EA	EACH	NTS	NOT TO SCALE	TRANSV	TRANSVERSE
ECC	ECCENTRIC	NWC	NORMAL WEIGHT CONCRETE	TYP	TYPICAL
EF	EACH FACE				
EIFS	EXTERIOR INSULATION & FINISH SYSTEM				
EJ	EXPANSION JOINT	O/O	OUT TO OUT	UNO	UNLESS NOTED OTHERWISE
EL	ELEVATION	OA	OVERALL	UNEXC	UNEXCAVATED
ELEC	ELECTRICAL	OC	ON CENTER		
ELEV	ELEVATOR	OD	OUTSIDE DIAMETER		
ENG	ENGINEER	OF	OUTSIDE FACE	VERT	VERTICAL
EQ	EQUAL	OH	OPPOSITE HAND		
EQ SPA	EQUALLY SPACED (EQUAL SPACING)	OPNG	OPENING		
EQUIV	EQUIVALENT	OPP	OPPOSITE	W	WIDE (WIDTH)
ES	EACH SIDE	OSB	ORIENTED STRAND BOARD	W/	WITH
EW	EACH WAY			WD	WOOD
EX	EXISTING			WF	WALL FOOTING
EXC	EXCAVATE (EXCAVATION)			WP	WORKING POINT
EXT	EXTERIOR			WPS	WELD PROCEDURE SPECIFICATION
				WRDA	WATER REDUCING ADMIXTURE
				WTCA	WOOD TRUSS COUNCIL OF AMERICA
FABR	FABRICATE (FABRICATOR)			WWF	WELDED WIRE FABRIC
FD	FLOOR DRAIN				
FDN	FOUNDATION				
FIN	FINISH				
FF	FINISHED FLOOR				
FLG	FLANGE				
FS	FAR SIDE				
FT	FOOT (FEET)				
FTG	FOOTING				
FV	FIELD VERIFY				

TOGETHER WE LEARN

8831 Keystone Crossing, Indianapolis, IN 46240
317.848.7800 | csoinc.net

© 2018 CSO Architects, Inc. All Rights Reserved

Lynch, Harrison & Brumleve, Inc.

PROJECT:
BARTHOLOMEW CONSOLIDATED SCHOOL CORPORATION
MAPLE GROVE ELEMENTARY
TIPTON LAKES BLVD, COLUMBUS, IN 47201

SCOPE DRAWINGS:
These drawings indicate the general scope of the project in terms of architectural design concept, the dimensions of the building, the major architectural elements and the type of structural, mechanical and electrical systems.
The drawings do not necessarily indicate or describe all work required for full performance and completion of the requirements of the Contract.
On the basis of the general scope indicated or described, the trade contractors shall furnish all items required for the proper execution and completion of the work.

REVISIONS:

1	ADD #2	06/17/25

ISSUE DATE	DRAWN BY	CHECKED BY
05/30/2025	NMA/JRO/MDL	MDL

DRAWING TITLE:
GENERAL STRUCTURAL NOTES & SCHEDULES

CERTIFIED BY:
MARK D. LAVIER
REGISTERED
PE19400114
STATE OF INDIANA
PROFESSIONAL ENGINEER

DRAWING NUMBER
S002

PROJECT NUMBER
2024022

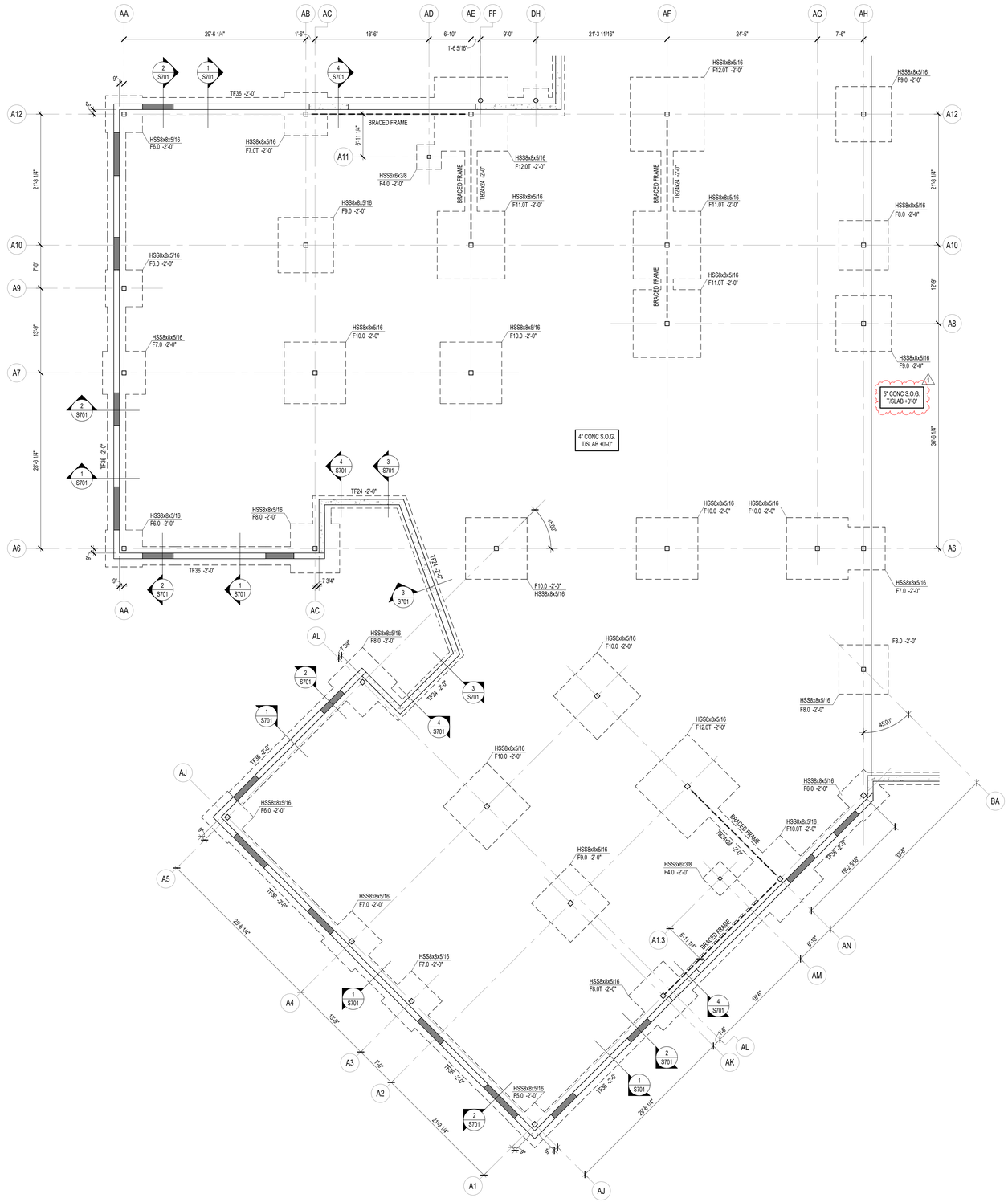

1 S201A FOUNDATION PLAN - UNIT A

SCALE: 1/8" = 1'-0"

FOUNDATION PLAN NOTES

1. REF. S001 & S002 FOR STRUCTURAL NOTES, DESIGN DATA, SCHEDULES & LEGENDS.
2. REF. THE S400 SERIES FOR TYPICAL FOUNDATION AND MASONRY DETAILS.
3. ALL CONTRACTORS ARE REQUIRED TO COORDINATE THEIR WORK WITH ALL DISCIPLINES TO AVOID CONFLICTS. THE MECHANICAL, ELECTRICAL, AND PLUMBING ASPECTS ARE NOT IN THE SCOPE OF THESE DRAWINGS. THEREFORE, ALL REQUIRED MATERIALS AND WORK MAY NOT BE INDICATED.
4. ALL ELEVATIONS ARE REFERENCED FROM THE FIRST FLOOR FIN. FLOOR ELEVATION +0'-0" (USGS 924.00). VERIFY USGS ELEVATION WITH CIVIL DWGS.
5. ALL WALLS SHALL BE LAID OUT FROM THE ARCHITECTURAL DRAWINGS.
6. REF. ARCH. DRAWINGS. FOR ALL DIMENSIONS NOT SHOWN. CONTRACTOR SHALL VERIFY ALL DIMENSIONS PRIOR TO CONSTRUCTION AND IMMEDIATELY NOTIFY ARCHITECT/ENGINEER OF ANY DISCREPANCIES.
7. COORDINATE EXACT SIZE & LOCATION OF ALL MECHANICAL OPENINGS IN FDN. WALLS WITH THE MECHANICAL, ELECTRICAL & PLUMBING CONTRACTORS.
8. NOTE: PERIMETER FOOTINGS SHALL BE LOWERED AND/OR SLEEVED TO PASS BELOW PLUMBING LINES (E.G., SANITARY & STORM LINES, WATER LINES, ETC.) SHOWN ON THE PLUMBING DRAWINGS. PROVIDE FOOTING STEPS AS REQUIRED PER THE TYPICAL DETAILS ON S401.
9. ALL SLAB RECESSES SHALL BE LOCATED PER THE ARCHITECTURAL DRAWINGS. COORDINATE DEPTHS OF ALL SLAB RECESSES WITH THE ARCHITECTURAL DRAWINGS AND/OR THE FLOORING SUPPLIER.
10. PROVIDE CMU REINFORCING AS FOLLOWS, UNLESS NOTED OTHERWISE ON PLANS & SECTIONS:

12" CMU, EXTERIOR (> 27' TALL):	#6 @ 16" OC
12" CMU, EXTERIOR (< 27' TALL):	#6 @ 32" OC
12" CMU, INTERIOR (> 27' TALL):	#6 @ 32" OC
12" CMU, INTERIOR (< 27' TALL):	#5 @ 32" OC
10" CMU, EXTERIOR:	#6 @ 32" OC
10" CMU, INTERIOR:	#5 @ 32" OC
8" CMU:	#5 @ 32" OC
6" CMU:	#5 @ 48" OC
FOUNDATION WALLS NOT EXTENDING ABOVE GRADE:	#5 @ 48" OC

(NOTE: WHERE ONLY THE UPPER PORTION OF WALL HAS EXTERIOR EXPOSURE, THE ENTIRE WALL IS AN EXTERIOR WALL FOR REINFORCING PURPOSES.)

PROVIDE OPEN-CORE BOND BEAMS AT TOPS OF WALLS, AT CHANGES IN CMU THICKNESS, AND WHERE INDICATED ON PLANS & SECTIONS (10'-0" OC MAX VERTICAL SPACING). PROVIDE 1/2 OF INTERRUPTED VERTICALS AT JAMBS OF OPENINGS AND PROVIDE ADDITIONAL VERT'S. AT ENDS OF WALLS.

11. COORDINATE REINFORCING DOWELS FOR CMU VERTICAL REINFORCING WITH REINF. NOTED ON PLANS & SECTIONS.
12. GROUT ALL CORES OF CMU SOLID BELOW FIN. FLOOR ELEVATION.
13. PROVIDE THICKENED SLAB UNDER ALL INTERIOR CMU WALLS WITHOUT FOOTINGS. SEE S401 FOR THICKENED SLAB DETAIL. REF. THE ARCHITECTURAL DRAWINGS FOR LOCATIONS OF CMU WALLS.
14. ALL FOOTINGS SHALL BEAR ON APPROVED SOIL. UNDERCUT AS REQD. TO SUITABLE BEARING MATERIAL AS DETERMINED BY THE GEOTECHNICAL TESTING AGENCY. REF. TYPICAL FOOTING UNDERCUT DETAILS ON S402.
15. PROVIDE CONTROL/CONTRACTION JOINTS IN SLABS ON GRADE (REF. TYPICAL DETAILS ON S401). ALL JOINTS IN SLABS TO RECEIVE THIN OR THICK-SET TERRAZZO, CERAMIC OR PORCELAIN TILE, VINYL-COMPOSITION TILE (VCT) OR VINYL SHEET GOODS, EPOXY OR SIMILAR THIN-FILM FINISH FLOORING SHALL BE CAREFULLY COORDINATED WITH THE FLOORING CONTRACTOR. THE CONTRACTOR SHALL SUBMIT SLAB JOINT LAYOUT TO ARCHITECT/ENGINEER FOR REVIEW PRIOR TO PLACING SLABS.
16. EARTH-FORMED FOOTINGS ARE ACCEPTABLE WHERE SOIL CONDITIONS PERMIT (I.E. WHERE THE BANKS OF THE EXCAVATION WILL HOLD WITHOUT CAVING AND SLOUGHING). HOWEVER, THE PLAN DIMENSION OF EARTH- FORMED FOOTINGS MUST BE INCREASED BY 2" ALONG ALL EDGES TO ACCOUNT FOR INACCURACIES ASSOCIATED WITH EARTH-FORMING (I.E. 2'-0" WIDE WALL FOOTINGS SHALL BE 2'-4" WIDE AND 5'-0" SQUARE COLUMN FOOTINGS SHALL BE 5'-4" SQUARE).
17. SUBSTITUTION OF POLYPROPYLENE FIBER SECONDARY REINFORCING FOR WELDED WIRE FABRIC IS PERMITTED FOR SLABS ON GRADE EXCEPT FOR GYMNASIUM SLABS AND SLABS THAT RECEIVE EPOXY FINISH FLOORING (COORD. LOCATIONS WITH ARCHITECTURAL FINISH PLANS).
18. AT ALL COLUMNS NOTED AS "EXPOSED COLUMN" PROVIDE SPECIAL CARE IN PROCESSING SO THAT THE MEMBER IS DELIVERED TO THE SITE WITH NO MILL MARKS, AND WITH PIECE MARKS FULLY HIDDEN FROM VIEW OR MADE WITH SUCH MEDIA AS TO PERMIT FULL REMOVAL AFTER ERECTION. REFERENCE THE PROJECT SPECIFICATIONS FOR SURFACE PREP AND COATING REQUIREMENTS.
19. REF. ARCHITECTURAL DWGS. FOR MASONRY CONTROL & EXPANSION JOINT LOCATIONS.
20. PLAN LEGEND:

FF	DENOTES FIN. FLOOR
T/X'	DENOTES TOP OF FTG, SLAB, PIER, ETC.
B/X'	DENOTES BOTTOM OF FTG, GRADE BEAM, ETC.
CJ	DENOTES SLAB ON GRADE CONTROL/CONTRACTION JOINT
W24 -2'-8"	DENOTES WALL FOOTING MARK & TOP OF FOOTING ELEVATION (REF. WALL FTG SCHED.)
TB24x24 -1'-4"	DENOTES TIE BEAM MARK & T/BEAM ELEVATION (REF. TIE BEAM SCHEDULE)
	DENOTES WALL FOOTING WITH STEPS. REF. TYP. DETAIL ON S401
1	DENOTES PRECAST CONC. FNDN WALL BELOW WINDOWS/OPENINGS
	DENOTES APPROX. LOCATION OF THICKENED SLABS PER TYP. DETAIL; REF. ARCH DWGS
	DENOTES CONC. FNDN WALL HELD DOWN AT OPENINGS AND GLAZING
#5@32"OC	DENOTES CMU WALL VERT. REINF. SIZE & SPACING. IF NOT SHOWN, PROVIDE MIN. PER NOTE 10 ABOVE.
4" CONC. SOG T/SLAB +0'-0"	DENOTES SLAB ON GRADE THICKNESS & T/SLAB ELEVATION. ALL SLABS ON GRADE TO BE PLACED ON 6" MIN. COMPACTED GRANULAR FILL & VAPOR BARRIER/RETARDER PER SPECS. PROVIDE THE FOLLOWING WELDED WIRE FABRIC REINFORCING: 4" SLAB: 6x6-W1.4xW1.4 WWF; 5" SLAB: 6x6-W2.1xW2.1 WWF; 6" SLAB: 6x6-W2.9xW2.9 WWF

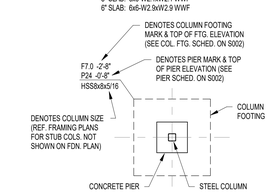

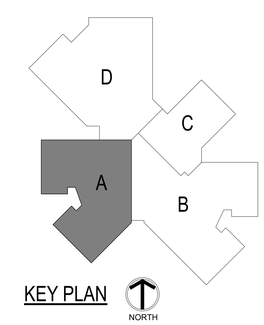

KEY PLAN

BCSC TOGETHER WE LEARN

CSO
8831 Keystone Crossing, Indianapolis, IN 46240
317.848.7800 | csoinc.net
© 2018 CSO Architects, Inc. All Rights Reserved

Lynch, Harrison & Brumleve, Inc.

PROJECT:
BARTHOLOMEW CONSOLIDATED SCHOOL CORPORATION
MAPLE GROVE ELEMENTARY
TIPTON LAKES BLVD, COLUMBUS, IN 47201

SCOPE DRAWINGS:
These drawings indicate the general scope of the project in terms of demolition, new work, and the general layout of the building, the major architectural elements and the type of structural, mechanical and electrical systems. The Contract Documents are intended to describe all work required for full performance and completion of the requirements of the Contract.
On the basis of the general scope indicated or described, the trade contractors shall furnish all items required for the proper execution and completion of the work.

REVISIONS:

1	ADD #2	06/17/25

ISSUE DATE	DRAWN BY	CHECKED BY
05/16/2025	NMA/JRO/MDL	MDL

DRAWING TITLE:
FOUNDATION PLAN - UNIT A

CERTIFIED BY:
MARK D. LAVIER REGISTERED PE19400114 STATE OF INDIANA PROFESSIONAL ENGINEER

DRAWING NUMBER
S201A

PROJECT NUMBER
2024022

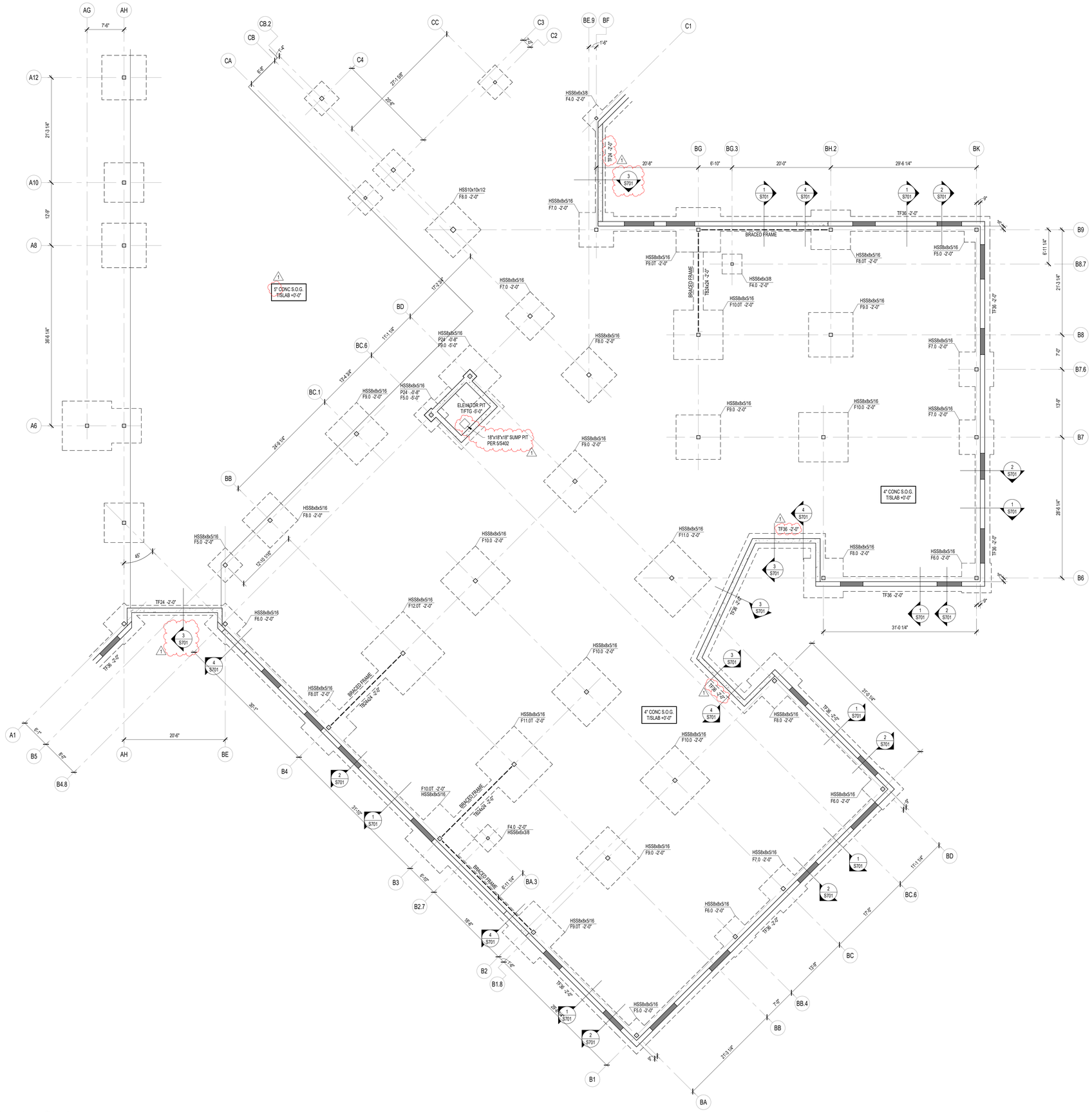

1 S201B FOUNDATION PLAN - UNIT B
SCALE: 1/8" = 1'-0"

FOUNDATION PLAN NOTES

1. REF. S001 & S002 FOR STRUCTURAL NOTES, DESIGN DATA, SCHEDULES & LEGENDS.
2. REF. THE S400 SERIES FOR TYPICAL FOUNDATION AND MASONRY DETAILS.
3. ALL CONTRACTORS ARE REQUIRED TO COORDINATE THEIR WORK WITH ALL DISCIPLINES TO AVOID CONFLICTS. THE MECHANICAL, ELECTRICAL, AND PLUMBING ASPECTS ARE NOT IN THE SCOPE OF THESE DRAWINGS. THEREFORE, ALL REQUIRED MATERIALS AND WORK MAY NOT BE INDICATED.
4. ALL ELEVATIONS ARE REFERENCED FROM THE FIRST FLOOR FIN. FLOOR ELEVATION +0'-0" (USGS 924.00). VERIFY USGS ELEVATION WITH CIVIL DWGS.
5. ALL WALLS SHALL BE LAID OUT FROM THE ARCHITECTURAL DRAWINGS.
6. REF. ARCH. DRAWINGS. FOR ALL DIMENSIONS NOT SHOWN. CONTRACTOR SHALL VERIFY ALL DIMENSIONS PRIOR TO CONSTRUCTION AND IMMEDIATELY NOTIFY ARCHITECT/ENGINEER OF ANY DISCREPANCIES.
7. COORDINATE EXACT SIZE & LOCATION OF ALL MECHANICAL OPENINGS IN FDN. WALLS WITH THE MECHANICAL, ELECTRICAL & PLUMBING CONTRACTORS.
8. NOTE: PERIMETER FOOTINGS SHALL BE LOWERED AND/OR SLEEVED TO PASS BELOW PLUMBING LINES (E.G., SANITARY & STORM LINES, WATER LINES, ETC.) SHOWN ON THE PLUMBING DRAWINGS. PROVIDE FOOTING STEPS AS REQUIRED PER THE TYPICAL DETAILS ON S401.
9. ALL SLAB RECESSES SHALL BE LOCATED PER THE ARCHITECTURAL DRAWINGS. COORDINATE DEPTHS OF ALL SLAB RECESSES WITH THE ARCHITECTURAL DRAWINGS AND/OR THE FLOORING SUPPLIER.
10. PROVIDE CMU REINFORCING AS FOLLOWS, UNLESS NOTED OTHERWISE ON PLANS & SECTIONS:

12" CMU, EXTERIOR (> 27' TALL):	#6 @ 16" OC
12" CMU, EXTERIOR (< 27' TALL):	#6 @ 32" OC
12" CMU, INTERIOR (> 27' TALL):	#6 @ 32" OC
12" CMU, INTERIOR (< 27' TALL):	#5 @ 32" OC
10" CMU, EXTERIOR:	#6 @ 32" OC
10" CMU, INTERIOR:	#5 @ 32" OC
8" CMU:	#5 @ 32" OC
6" CMU:	#5 @ 48" OC
FOUNDATION WALLS NOT EXTENDING ABOVE GRADE:	#5 @ 48" OC

(NOTE: WHERE ONLY THE UPPER PORTION OF WALL HAS EXTERIOR EXPOSURE, THE ENTIRE WALL IS AN EXTERIOR WALL FOR REINFORCING PURPOSES.)

PROVIDE OPEN-CORE BOND BEAMS AT TOPS OF WALLS, AT CHANGES IN CMU THICKNESS, AND WHERE INDICATED ON PLANS & SECTIONS (10'-0" OC MAX VERTICAL SPACING). PROVIDE 1/2 OF INTERRUPTED VERTICALS AT JAMBS OF OPENINGS AND PROVIDE ADDITIONAL VERT'S. AT ENDS OF WALLS.

11. COORDINATE REINFORCING DOWELS FOR CMU VERTICAL REINFORCING WITH REINF. NOTED ON PLANS & SECTIONS.
12. GROUT ALL CORES OF CMU SOLID BELOW FIN. FLOOR ELEVATION.
13. PROVIDE THICKENED SLAB UNDER ALL INTERIOR CMU WALLS WITHOUT FOOTINGS. SEE S401 FOR THICKENED SLAB DETAIL. REF. THE ARCHITECTURAL DRAWINGS FOR LOCATIONS OF CMU WALLS.
14. ALL FOOTINGS SHALL BEAR ON APPROVED SOIL. UNDERCUT AS REQ'D. TO SUITABLE BEARING MATERIAL AS DETERMINED BY THE GEOTECHNICAL TESTING AGENCY. REF. TYPICAL FOOTING UNDERCUT DETAILS ON S402.
15. PROVIDE CONTROL/CONTRACTION JOINTS IN SLABS ON GRADE (REF. TYPICAL DETAILS ON S401). ALL JOINTS IN SLABS TO RECEIVE THIN OR THICK-SET TERRAZZO, CERAMIC OR PORCELAIN TILE, VINYL-COMPOSITION TILE (VCT) OR VINYL SHEET GOODS, EPOXY OR SIMILAR THIN-FILM FINISH FLOORING SHALL BE CAREFULLY COORDINATED WITH THE FLOORING CONTRACTOR. THE CONTRACTOR SHALL SUBMIT SLAB JOINT LAYOUT TO ARCHITECT/ENGINEER FOR REVIEW PRIOR TO PLACING SLABS.
16. EARTH-FORMED FOOTINGS ARE ACCEPTABLE WHERE SOIL CONDITIONS PERMIT (I.E. WHERE THE BANKS OF THE EXCAVATION WILL HOLD WITHOUT CAVING AND SLOUGHING). HOWEVER, THE PLAN DIMENSION OF EARTH- FORMED FOOTINGS MUST BE INCREASED BY 2" ALONG ALL EDGES TO ACCOUNT FOR INACCURACIES ASSOCIATED WITH EARTH-FORMING (I.E. 2'-0" WIDE WALL FOOTINGS SHALL BE 2'-4" WIDE AND 5'-0" SQUARE COLUMN FOOTINGS SHALL BE 5'-4" SQUARE).
17. SUBSTITUTION OF POLYPROPYLENE FIBER SECONDARY REINFORCING FOR WELDED WIRE FABRIC IS PERMITTED FOR SLABS ON GRADE EXCEPT FOR GYMNASIUM SLABS AND SLABS THAT RECEIVE EPOXY FINISH FLOORING (COORD. LOCATIONS WITH ARCHITECTURAL FINISH PLANS).
18. AT ALL COLUMNS NOTED AS "EXPOSED COLUMN" PROVIDE SPECIAL CARE IN PROCESSING SO THAT THE MEMBER IS DELIVERED TO THE SITE WITH NO MILL MARKS, AND WITH PIECE MARKS FULLY HIDDEN FROM VIEW OR MADE WITH SUCH MEDIA AS TO PERMIT FULL REMOVAL AFTER ERECTION. REFERENCE THE PROJECT SPECIFICATIONS FOR SURFACE PREP AND COATING REQUIREMENTS.
19. REF. ARCHITECTURAL DWGS. FOR MASONRY CONTROL & EXPANSION JOINT LOCATIONS.
20. PLAN LEGEND:

FF	DENOTES FIN. FLOOR
T/X'	DENOTES TOP OF FTG, SLAB, PIER, ETC.
B/X'	DENOTES BOTTOM OF FTG, GRADE BEAM, ETC.
CJ	DENOTES SLAB ON GRADE CONTROL/CONTRACTION JOINT
WF24 -2'-8"	DENOTES WALL FOOTING MARK & TOP OF FOOTING ELEVATION (REF. WALL FTG SCHED.)
TB24x24 -1'-4"	DENOTES TIE BEAM MARK & T/BEAM ELEVATION (REF. TIE BEAM SCHEDULE)
	DENOTES WALL FOOTING WITH STEPS. REF. TYP. DETAIL ON S401
1	DENOTES PRECAST CONC. FNDN WALL BELOW WINDOWS/OPENINGS DENOTES APPROX. LOCATION OF THICKENED SLABS PER TYP. DETAIL; REF. ARCH DWGS DENOTES CONC. FNDN WALL HELD DOWN AT OPENINGS AND GLAZING
#5@32"OC	DENOTES CMU WALL VERT. REINF. SIZE & SPACING. IF NOT SHOWN, PROVIDE MIN. PER NOTE 10 ABOVE.
4" CONC. S.O.G. T/SLAB +0'-0"	DENOTES SLAB ON GRADE THICKNESS & T/SLAB ELEVATION. ALL SLABS ON GRADE TO BE PLACED ON 6" MIN. COMPACTED GRANULAR FILL & VAPOR BARRIER/RETARDER PER SPECS. PROVIDE THE FOLLOWING WELDED WIRE FABRIC REINFORCING: 4" SLAB: 6x6-W1.4xW1.4 WWF 5" SLAB: 6x6-W2.1xW2.1 WWF 6" SLAB: 6x6-W2.9xW2.9 WWF

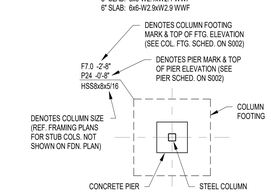

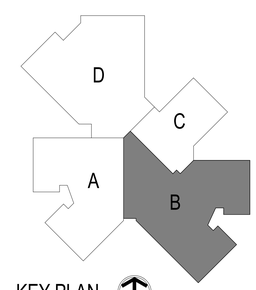

KEY PLAN
NORTH

BCSC TOGETHER WE LEARN

CSO
8831 Keystone Crossing, Indianapolis, IN 46240
317.848.7800 | csoinc.net
© 2018 CSO Architects, Inc. All Rights Reserved

Lynch, Harrison & Brumleve, Inc.

PROJECT:
BARTHOLOMEW CONSOLIDATED SCHOOL CORPORATION
MAPLE GROVE ELEMENTARY
TIPTON LAKES BLVD, COLUMBUS, IN 47201

SCOPE DRAWINGS:
These drawings indicate the general scope of the project in terms of architectural design concept, the dimensions of the building, the major architectural elements and the type of construction and exterior and interior finishes.
The drawings do not necessarily indicate or describe all work required for full performance and completion of the contract for construction.
On the basis of the general scope indicated or described, the trade contractors shall furnish all items required for the proper execution and completion of the work.

REVISIONS:

1	ADD #2	06/17/25

ISSUE DATE	DRAWN BY	CHECKED BY
05/16/2025	NMA/JRO/MDL	MDL

DRAWING TITLE:
FOUNDATION PLAN - UNIT B

CERTIFIED BY:
MARK D. LAVIER
REGISTERED
PE19400114
STATE OF INDIANA
PROFESSIONAL ENGINEER

DRAWING NUMBER
S201B

PROJECT NUMBER
2024022

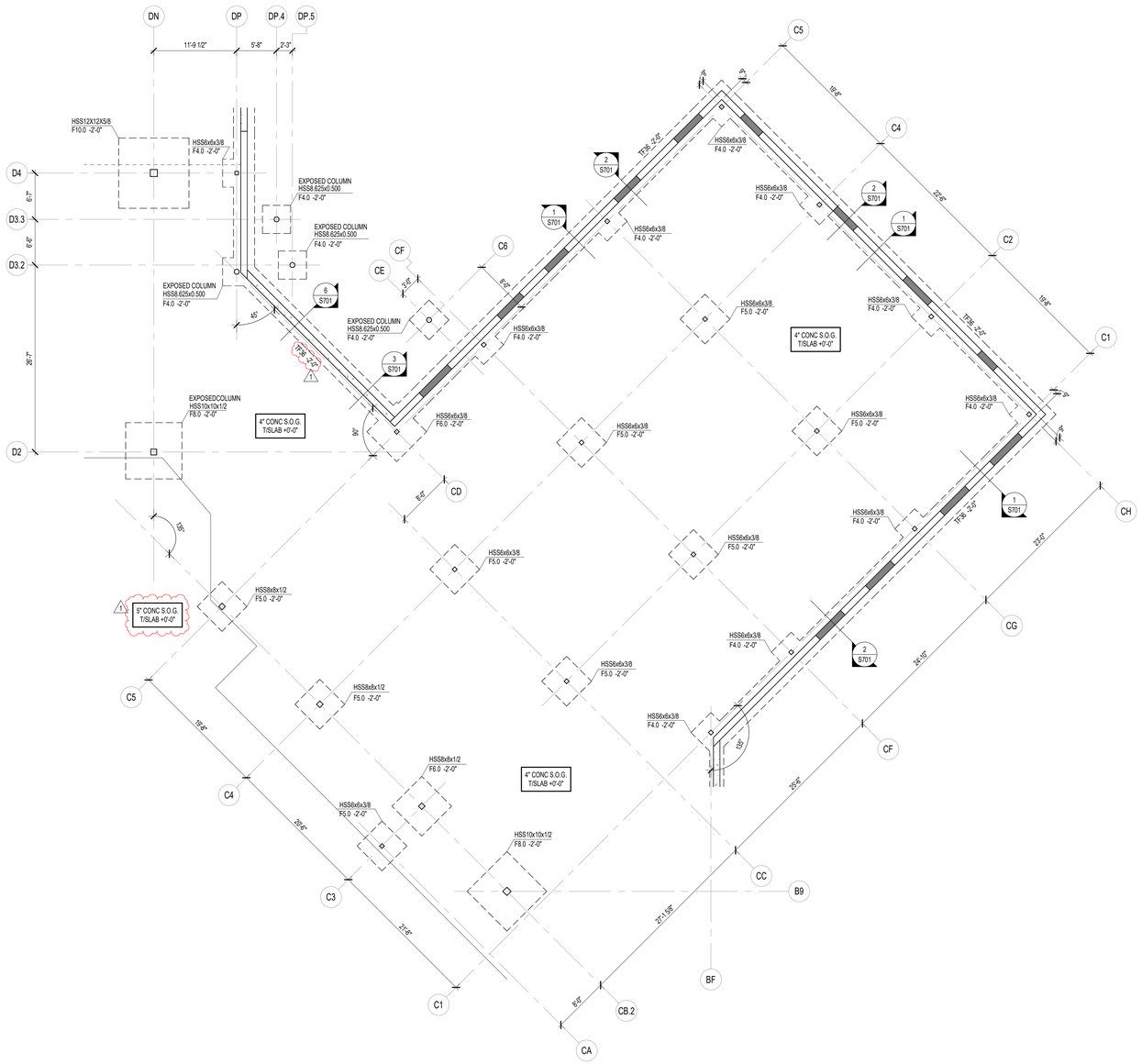

1 S201C FOUNDATION PLAN - UNIT C
SCALE: 1/8" = 1'-0"

FOUNDATION PLAN NOTES

1. REF. S001 & S002 FOR STRUCTURAL NOTES, DESIGN DATA, SCHEDULES & LEGENDS.
2. REF. THE S400 SERIES FOR TYPICAL FOUNDATION AND MASONRY DETAILS.
3. ALL CONTRACTORS ARE REQUIRED TO COORDINATE THEIR WORK WITH ALL DISCIPLINES TO AVOID CONFLICTS. THE MECHANICAL, ELECTRICAL, AND PLUMBING ASPECTS ARE NOT IN THE SCOPE OF THESE DRAWINGS. THEREFORE, ALL REQUIRED MATERIALS AND WORK MAY NOT BE INDICATED.
4. ALL ELEVATIONS ARE REFERENCED FROM THE FIRST FLOOR FIN. FLOOR ELEVATION +0'-0" (USGS 924.00). VERIFY USGS ELEVATION WITH CIVIL DWGS.
5. ALL WALLS SHALL BE LAID OUT FROM THE ARCHITECTURAL DRAWINGS.
6. REF. ARCH. DRAWINGS. FOR ALL DIMENSIONS NOT SHOWN. CONTRACTOR SHALL VERIFY ALL DIMENSIONS PRIOR TO CONSTRUCTION AND IMMEDIATELY NOTIFY ARCHITECT/ENGINEER OF ANY DISCREPANCIES.
7. COORDINATE EXACT SIZE & LOCATION OF ALL MECHANICAL OPENINGS IN FDN. WALLS WITH THE MECHANICAL, ELECTRICAL & PLUMBING CONTRACTORS.
8. NOTE: PERIMETER FOOTINGS SHALL BE LOWERED AND/OR SLEEVED TO PASS BELOW PLUMBING LINES (E.G., SANITARY & STORM LINES, WATER LINES, ETC.) SHOWN ON THE PLUMBING DRAWINGS. PROVIDE FOOTING STEPS AS REQUIRED PER THE TYPICAL DETAILS ON S401.
9. ALL SLAB RECESSES SHALL BE LOCATED PER THE ARCHITECTURAL DRAWINGS. COORDINATE DEPTHS OF ALL SLAB RECESSES WITH THE ARCHITECTURAL DRAWINGS AND/OR THE FLOORING SUPPLIER.
10. PROVIDE CMU REINFORCING AS FOLLOWS, UNLESS NOTED OTHERWISE ON PLANS & SECTIONS:

12" CMU, EXTERIOR (> 27' TALL):	#6 @ 16" OC
12" CMU, EXTERIOR (< 27' TALL):	#6 @ 32" OC
12" CMU, INTERIOR (> 27' TALL):	#6 @ 32" OC
12" CMU, INTERIOR (< 27' TALL):	#5 @ 32" OC
10" CMU, EXTERIOR:	#6 @ 32" OC
10" CMU, INTERIOR:	#5 @ 32" OC
8" CMU:	#5 @ 32" OC
6" CMU:	#5 @ 48" OC
FOUNDATION WALLS NOT EXTENDING ABOVE GRADE:	#5 @ 48" OC

(NOTE: WHERE ONLY THE UPPER PORTION OF WALL HAS EXTERIOR EXPOSURE, THE ENTIRE WALL IS AN EXTERIOR WALL FOR REINFORCING PURPOSES.)

PROVIDE OPEN-CORE BOND BEAMS AT TOPS OF WALLS, AT CHANGES IN CMU THICKNESS, AND WHERE INDICATED ON PLANS & SECTIONS (10'-0" OC MAX VERTICAL SPACING). PROVIDE 1/2 OF INTERRUPTED VERTICALS AT JAMBS OF OPENINGS AND PROVIDE ADDITIONAL VERT'S. AT ENDS OF WALLS.

11. COORDINATE REINFORCING DOWELS FOR CMU VERTICAL REINFORCING WITH REINF. NOTED ON PLANS & SECTIONS.
12. GROUT ALL CORES OF CMU SOLID BELOW FIN. FLOOR ELEVATION.
13. PROVIDE THICKENED SLAB UNDER ALL INTERIOR CMU WALLS WITHOUT FOOTINGS. SEE S401 FOR THICKENED SLAB DETAIL. REF. THE ARCHITECTURAL DRAWINGS FOR LOCATIONS OF CMU WALLS.
14. ALL FOOTINGS SHALL BEAR ON APPROVED SOIL. UNDERCUT AS REQ'D. TO SUITABLE BEARING MATERIAL AS DETERMINED BY THE GEOTECHNICAL TESTING AGENCY. REF. TYPICAL FOOTING UNDERCUT DETAILS ON S402.
15. PROVIDE CONTROL/CONTRACTION JOINTS IN SLABS ON GRADE (REF. TYPICAL DETAILS ON S401). ALL JOINTS IN SLABS TO RECEIVE THIN OR THICK-SET TERRAZZO, CERAMIC OR PORCELAIN TILE, VINYL-COMPOSITION TILE (VCT) OR VINYL SHEET GOODS, EPOXY OR SIMILAR THIN-FILM FINISH FLOORING SHALL BE CAREFULLY COORDINATED WITH THE FLOORING CONTRACTOR. THE CONTRACTOR SHALL SUBMIT SLAB JOINT LAYOUT TO ARCHITECT/ENGINEER FOR REVIEW PRIOR TO PLACING SLABS.
16. EARTH-FORMED FOOTINGS ARE ACCEPTABLE WHERE SOIL CONDITIONS PERMIT (I.E. WHERE THE BANKS OF THE EXCAVATION WILL HOLD WITHOUT CAVING AND SLOUGHING). HOWEVER, THE PLAN DIMENSION OF EARTH- FORMED FOOTINGS MUST BE INCREASED BY 2" ALONG ALL EDGES TO ACCOUNT FOR INACCURACIES ASSOCIATED WITH EARTH-FORMING (I.E. 2'-0" WIDE WALL FOOTINGS SHALL BE 2'-4" WIDE AND 5'-0" SQUARE COLUMN FOOTINGS SHALL BE 5'-4" SQUARE).
17. SUBSTITUTION OF POLYPROPYLENE FIBER SECONDARY REINFORCING FOR WELDED WIRE FABRIC IS PERMITTED FOR SLABS ON GRADE EXCEPT FOR GYMNASIUM SLABS AND SLABS THAT RECEIVE EPOXY FINISH FLOORING (COORD. LOCATIONS WITH ARCHITECTURAL FINISH PLANS).
18. AT ALL COLUMNS NOTED AS "EXPOSED COLUMN" PROVIDE SPECIAL CARE IN PROCESSING SO THAT THE MEMBER IS DELIVERED TO THE SITE WITH NO MILL MARKS, AND WITH PIECE MARKS FULLY HIDDEN FROM VIEW OR MADE WITH SUCH MEDIA AS TO PERMIT FULL REMOVAL AFTER ERECTION. REFERENCE THE PROJECT SPECIFICATIONS FOR SURFACE PREP AND COATING REQUIREMENTS.
19. REF. ARCHITECTURAL DWGS. FOR MASONRY CONTROL & EXPANSION JOINT LOCATIONS.
20. PLAN LEGEND:

FF	DENOTES FIN. FLOOR
T/'X'	DENOTES TOP OF FTG, SLAB, PIER, ETC.
B/'X'	DENOTES BOTTOM OF FTG, GRADE BEAM, ETC.
CJ	DENOTES SLAB ON GRADE CONTROL/CONTRACTION JOINT
WF24 -2'-8"	DENOTES WALL FOOTING MARK & TOP OF FOOTING ELEVATION (REF. WALL FTG SCHED.)
TB24x24 -1'-4"	DENOTES TIE BEAM MARK & T/BEAM ELEVATION (REF. TIE BEAM SCHEDULE)
	DENOTES WALL FOOTING WITH STEPS. REF. TYP. DETAIL ON S401
	DENOTES PRECAST CONC. FNDN WALL BELOW WINDOWS/OPENINGS
1	DENOTES APPROX. LOCATION OF THICKENED SLABS PER TYP. DETAIL; REF. ARCH DWGS
	DENOTES CONC. FNDN WALL HELD DOWN AT OPENINGS AND GLAZING
#5@32"OC	DENOTES CMU WALL VERT. REINF. SIZE & SPACING. IF NOT SHOWN, PROVIDE MIN. PER NOTE 10 ABOVE.
4" CONC. SOG T/SLAB +0'-0"	DENOTES SLAB ON GRADE THICKNESS & T/SLAB ELEVATION. ALL SLABS ON GRADE TO BE PLACED ON 6" MIN. COMPACTED GRANULAR FILL & VAPOR BARRIER/RETARDER PER SPECS. PROVIDE THE FOLLOWING WELDED WIRE FABRIC REINFORCING: 4" SLAB: 6x6-W1.4xW1.4 WWF; 5" SLAB: 6x6-W2.1xW2.1 WWF; 6" SLAB: 6x6-W2.9xW2.9 WWF

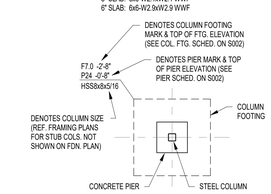

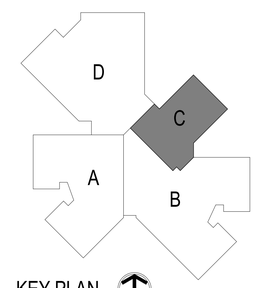

KEY PLAN
NORTH

BCSC TOGETHER WE LEARN

CSO
8831 Keystone Crossing, Indianapolis, IN 46240
317.848.7800 | csoinc.net
© 2018 CSO Architects, Inc. All Rights Reserved

Lynch, Harrison & Brumleve, Inc.

PROJECT:
BARTHOLOMEW CONSOLIDATED SCHOOL CORPORATION
MAPLE GROVE ELEMENTARY
TIPTON LAKES BLVD, COLUMBUS, IN 47201

SCOPE DRAWINGS:
These drawings indicate the general scope of the project in terms of architectural design concept, the dimensions of the building, the major architectural elements and the type of structural, mechanical and electrical systems. The Contractor shall furnish all labor and materials as describe all work required for full performance and completion of the requirements of the Contract.
On the basis of the general scope indicated or described, the trade contractors shall furnish all items required for the proper execution and completion of the work.

REVISIONS:

1	ADD #2	06/17/25

ISSUE DATE	DRAWN BY	CHECKED BY
05/16/2025	NMA/JRO/MDL	MDL

DRAWING TITLE:
FOUNDATION PLAN - UNIT C

CERTIFIED BY:
MARK D. LAVIER
REGISTERED
PE19400114
STATE OF INDIANA
PROFESSIONAL ENGINEER

DRAWING NUMBER
S201C

PROJECT NUMBER
2024022

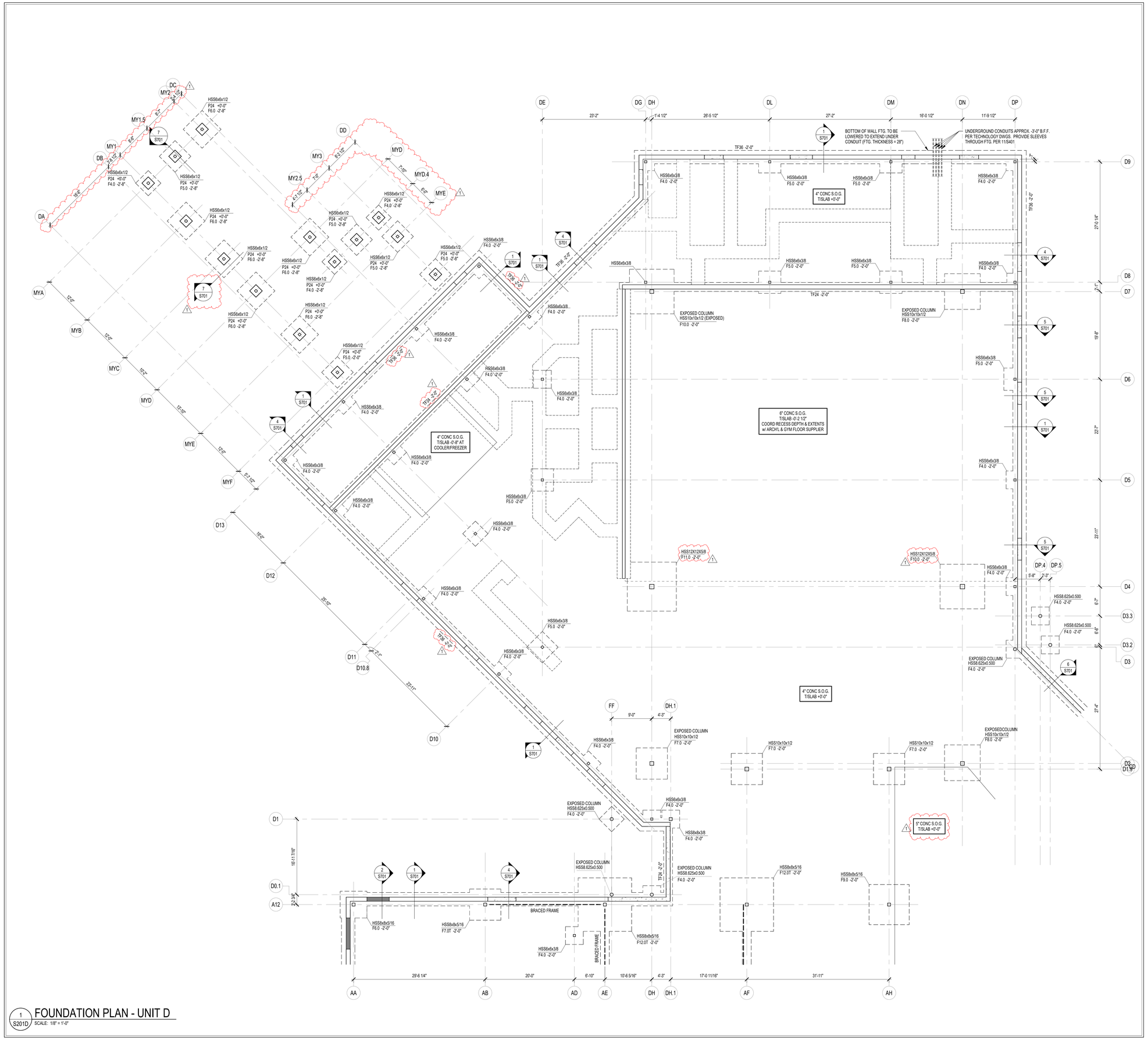

1 S201D FOUNDATION PLAN - UNIT D
SCALE: 1/8" = 1'-0"

FOUNDATION PLAN NOTES

1. REF. S001 & S002 FOR STRUCTURAL NOTES, DESIGN DATA, SCHEDULES & LEGENDS.
2. REF. THE S400 SERIES FOR TYPICAL FOUNDATION AND MASONRY DETAILS.
3. ALL CONTRACTORS ARE REQUIRED TO COORDINATE THEIR WORK WITH ALL DISCIPLINES TO AVOID CONFLICTS. THE MECHANICAL, ELECTRICAL, AND PLUMBING ASPECTS ARE NOT IN THE SCOPE OF THESE DRAWINGS. THEREFORE, ALL REQUIRED MATERIALS AND WORK MAY NOT BE INDICATED.
4. ALL ELEVATIONS ARE REFERENCED FROM THE FIRST FLOOR FIN. FLOOR ELEVATION +0'-0" (USGS 924.00). VERIFY USGS ELEVATION WITH CIVIL DWGS.
5. ALL WALLS SHALL BE LAID OUT FROM THE ARCHITECTURAL DRAWINGS.
6. REF. ARCH. DRAWINGS. FOR ALL DIMENSIONS NOT SHOWN. CONTRACTOR SHALL VERIFY ALL DIMENSIONS PRIOR TO CONSTRUCTION AND IMMEDIATELY NOTIFY ARCHITECT/ENGINEER OF ANY DISCREPANCIES.
7. COORDINATE EXACT SIZE & LOCATION OF ALL MECHANICAL OPENINGS IN FDN. WALLS WITH THE MECHANICAL, ELECTRICAL & PLUMBING CONTRACTORS.
8. NOTE: PERIMETER FOOTINGS SHALL BE LOWERED AND/OR SLEEVED TO PASS BELOW PLUMBING LINES (E.G., SANITARY & STORM LINES, WATER LINES, ETC.) SHOWN ON THE PLUMBING DRAWINGS. PROVIDE FOOTING STEPS AS REQUIRED PER THE TYPICAL DETAILS ON S401.
9. ALL SLAB RECESSES SHALL BE LOCATED PER THE ARCHITECTURAL DRAWINGS. COORDINATE DEPTHS OF ALL SLAB RECESSES WITH THE ARCHITECTURAL DRAWINGS AND/OR THE FLOORING SUPPLIER.
10. PROVIDE CMU REINFORCING AS FOLLOWS, UNLESS NOTED OTHERWISE ON PLANS & SECTIONS:

12" CMU, EXTERIOR (> 27' TALL):	#6 @ 16" OC
12" CMU, EXTERIOR (< 27' TALL):	#6 @ 32" OC
12" CMU, INTERIOR (> 27' TALL):	#6 @ 32" OC
12" CMU, INTERIOR (< 27' TALL):	#5 @ 32" OC
10" CMU, EXTERIOR:	#6 @ 32" OC
10" CMU, INTERIOR:	#5 @ 32" OC
8" CMU:	#5 @ 32" OC
6" CMU:	#5 @ 48" OC
FOUNDATION WALLS NOT EXTENDING ABOVE GRADE:	#5 @ 48" OC

(NOTE: WHERE ONLY THE UPPER PORTION OF WALL HAS EXTERIOR EXPOSURE, THE ENTIRE WALL IS AN EXTERIOR WALL FOR REINFORCING PURPOSES.)

PROVIDE OPEN-CORE BOND BEAMS AT TOPS OF WALLS, AT CHANGES IN CMU THICKNESS, AND WHERE INDICATED ON PLANS & SECTIONS (10'-0" OC MAX VERTICAL SPACING). PROVIDE 1/2 OF INTERRUPTED VERTICALS AT JAMBS OF OPENINGS AND PROVIDE ADDITIONAL VERT'S. AT ENDS OF WALLS.

11. COORDINATE REINFORCING DOWELS FOR CMU VERTICAL REINFORCING WITH REINF. NOTED ON PLANS & SECTIONS.
12. GROUT ALL CORES OF CMU SOLID BELOW FIN. FLOOR ELEVATION.
13. PROVIDE THICKENED SLAB UNDER ALL INTERIOR CMU WALLS WITHOUT FOOTINGS. SEE S401 FOR THICKENED SLAB DETAIL. REF. THE ARCHITECTURAL DRAWINGS FOR LOCATIONS OF CMU WALLS.
14. ALL FOOTINGS SHALL BEAR ON APPROVED SOIL. UNDERCUT AS REQ'D. TO SUITABLE BEARING MATERIAL AS DETERMINED BY THE GEOTECHNICAL TESTING AGENCY. REF. TYPICAL FOOTING UNDERCUT DETAILS ON S402.
15. PROVIDE CONTROL/CONTRACTION JOINTS IN SLABS ON GRADE (REF. TYPICAL DETAILS ON S401). ALL JOINTS IN SLABS TO RECEIVE THIN OR THICK-SET TERRAZZO, CERAMIC OR PORCELAIN TILE, VINYL-COMPOSITION TILE (VCT) OR VINYL SHEET GOODS, EPOXY OR SIMILAR THIN-FILM FINISH FLOORING SHALL BE CAREFULLY COORDINATED WITH THE FLOORING CONTRACTOR. THE CONTRACTOR SHALL SUBMIT SLAB JOINT LAYOUT TO ARCHITECT/ENGINEER FOR REVIEW PRIOR TO PLACING SLABS.
16. EARTH-FORMED FOOTINGS ARE ACCEPTABLE WHERE SOIL CONDITIONS PERMIT (I.E. WHERE THE BANKS OF THE EXCAVATION WILL HOLD WITHOUT CAVING AND SLOUGHING). HOWEVER, THE PLAN DIMENSION OF EARTH- FORMED FOOTINGS MUST BE INCREASED BY 2" ALONG ALL EDGES TO ACCOUNT FOR INACCURACIES ASSOCIATED WITH EARTH-FORMING (I.E. 2'-0" WIDE WALL FOOTINGS SHALL BE 2'-4" WIDE AND 5'-0" SQUARE COLUMN FOOTINGS SHALL BE 5'-4" SQUARE).
17. SUBSTITUTION OF POLYPROPYLENE FIBER SECONDARY REINFORCING FOR WELDED WIRE FABRIC IS PERMITTED FOR SLABS ON GRADE EXCEPT FOR GYMNASIUM SLABS AND SLABS THAT RECEIVE EPOXY FINISH FLOORING (COORD. LOCATIONS WITH ARCHITECTURAL FINISH PLANS).
18. AT ALL COLUMNS NOTED AS "EXPOSED COLUMN" PROVIDE SPECIAL CARE IN PROCESSING SO THAT THE MEMBER IS DELIVERED TO THE SITE WITH NO MILL MARKS, AND WITH PIECE MARKS FULLY HIDDEN FROM VIEW OR MADE WITH SUCH MEDIA AS TO PERMIT FULL REMOVAL AFTER ERECTION. REFERENCE THE PROJECT SPECIFICATIONS FOR SURFACE PREP AND COATING REQUIREMENTS.
19. REF. ARCHITECTURAL DWGS. FOR MASONRY CONTROL & EXPANSION JOINT LOCATIONS.
20. PLAN LEGEND:

FF	DENOTES FIN. FLOOR
T/X'	DENOTES TOP OF FTG, SLAB, PIER, ETC.
B/X'	DENOTES BOTTOM OF FTG, GRADE BEAM, ETC.
CJ	DENOTES SLAB ON GRADE CONTROL/CONTRACTION JOINT
WF24 -2'-8"	DENOTES WALL FOOTING MARK & TOP OF FOOTING ELEVATION (REF. WALL FTG SCHED.)
TB24x24 -1'-4"	DENOTES TIE BEAM MARK & TIBEAM ELEVATION (REF. TIE BEAM SCHEDULE)
	DENOTES WALL FOOTING WITH STEPS. REF. TYP. DETAIL ON S401
	DENOTES PRECAST CONC. FNDN WALL BELOW WINDOWS/OPENINGS
	DENOTES APPROX. LOCATION OF THICKENED SLABS PER TYP. DETAIL; REF. ARCH DWGS
	DENOTES CONC. FNDN WALL HELD DOWN AT OPENINGS AND GLAZING
#5@32"OC	DENOTES CMU WALL VERT. REINF. SIZE & SPACING. IF NOT SHOWN, PROVIDE MIN. PER NOTE 10 ABOVE.
4" CONC. SOG T/SLAB +0'-0"	DENOTES SLAB ON GRADE THICKNESS & T/SLAB ELEVATION. ALL SLABS ON GRADE TO BE PLACED ON 6" MIN. COMPACTED GRANULAR FILL & VAPOR BARRIER/RETARDER PER SPECS. PROVIDE THE FOLLOWING WELDED WIRE FABRIC REINFORCING: 4" SLAB: 6x6-W1.4xW1.4 WWF 5" SLAB: 6x6-W2.1xW2.1 WWF 6" SLAB: 6x6-W2.9xW2.9 WWF

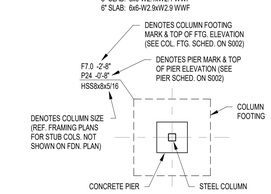

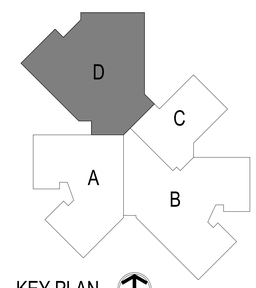

KEY PLAN
NORTH

BCSC TOGETHER WE LEARN

CSO
8831 Keystone Crossing, Indianapolis, IN 46240
317.848.7600 | csoinc.net
© 2018 CSO Architects, Inc. All Rights Reserved

Lynch, Harrison & Brumleve, Inc.

PROJECT:
BARTHOLOMEW CONSOLIDATED SCHOOL CORPORATION
MAPLE GROVE ELEMENTARY
TIPTON LAKES BLVD, COLUMBUS, IN 47201

SCOPE DRAWINGS:
These drawings indicate the general scope of the project in terms of architectural design concept, the dimensions of the building, the major architectural elements and the type of structural, mechanical and electrical systems. The drawings do not necessarily indicate or describe all work required for the performance and completion of the requirements of the Contract.
On the basis of the general scope indicated or described, the trade contractors shall furnish all items required for the proper execution and completion of the work.

REVISIONS:

1	ADD #2	06/17/25

ISSUE DATE	DRAWN BY	CHECKED BY
05/16/2025	NMA/JRO/MDL	MDL

DRAWING TITLE:
FOUNDATION PLAN - UNIT D

CERTIFIED BY:
MARK D. LaVIER REGISTERED PE19400114 STATE OF INDIANA PROFESSIONAL ENGINEER

DRAWING NUMBER
S201D

PROJECT NUMBER
2024022

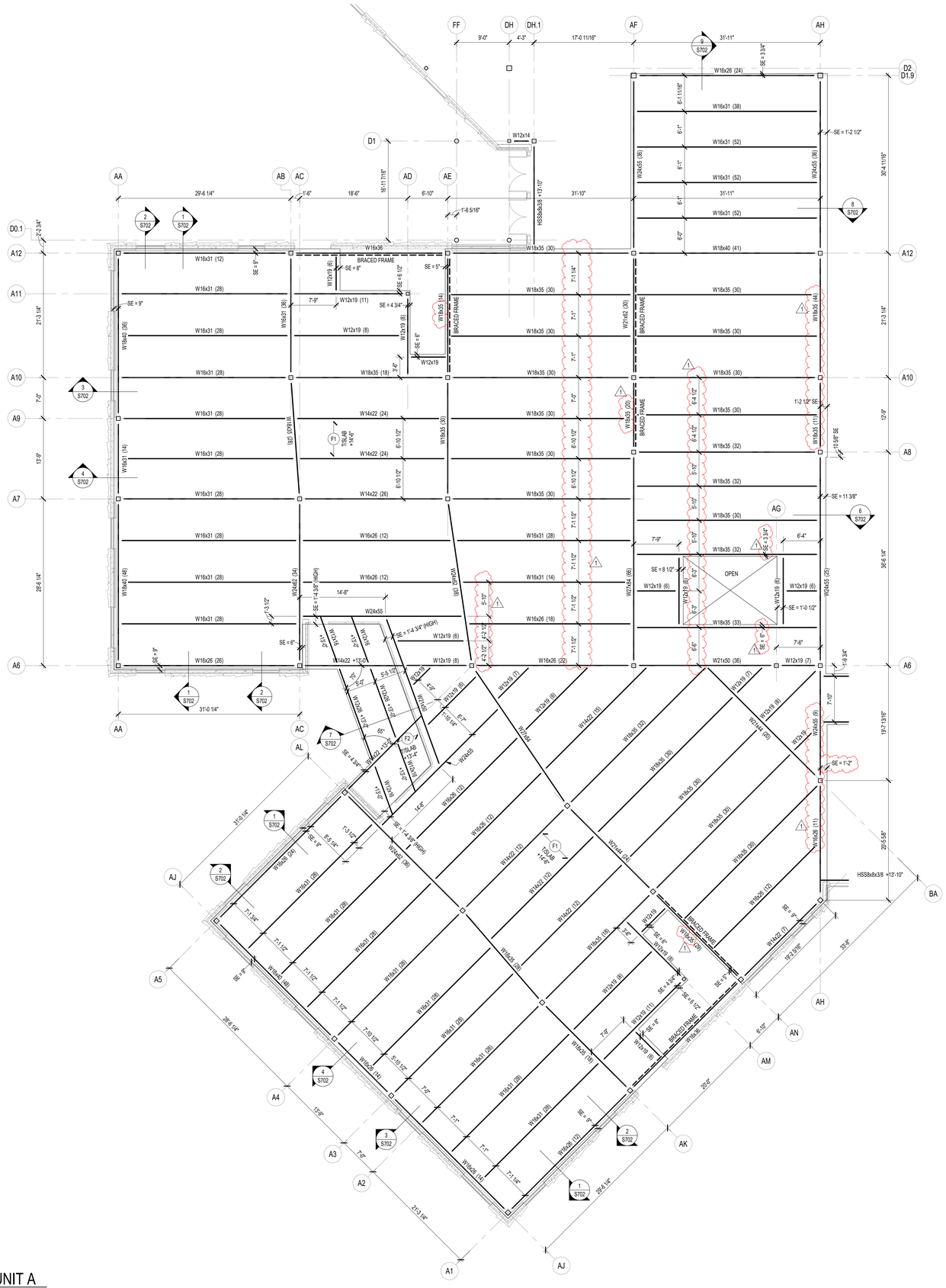

1 S202A SECOND FLOOR FRAMING PLAN - UNIT A
SCALE: 1/8" = 1'-0"

FRAMING PLAN NOTES

1. REF. S001 & S002 FOR STRUCTURAL NOTES, DESIGN DATA, SCHEDULES & LEGENDS.
2. REF. THE S400 SERIES FOR TYPICAL FRAMING AND MASONRY DETAILS
3. ALL CONTRACTORS ARE REQUIRED TO COORDINATE THEIR WORK WITH ALL DISCIPLINES TO AVOID CONFLICTS. THE MECHANICAL, ELECTRICAL, AND PLUMBING ASPECTS ARE NOT IN THE SCOPE OF THESE DRAWINGS. THEREFORE, ALL REQUIRED MATERIALS AND WORK MAY NOT BE INDICATED.
4. ALL ELEVATIONS ARE REFERENCED FROM THE FIRST FLOOR FIN. FLOOR ELEVATION =0'-0". VERIFY USGS ELEVATION WITH CIVIL DWGS.
5. ALL WALLS SHALL BE LAID OUT FROM THE ARCHITECTURAL DRAWINGS.
6. REF. ARCH. DRAWINGS. FOR ALL DIMENSIONS NOT SHOWN. CONTRACTOR SHALL VERIFY ALL DIMENSIONS PRIOR TO CONSTRUCTION AND IMMEDIATELY NOTIFY ARCHITECT/ENGINEER OF ANY DISCREPANCIES.
7. COORDINATE EXACT SIZE & LOCATION OF ANY MECHANICAL OPENINGS IN FLOOR SLAB, ROOF DECK, OR WALLS WITH THE MEP CONTRACTOR(S). LOCATION & SIZE OF ALL DUCT OPENINGS, GRILLES, ETC. SHALL BE VERIFIED PRIOR TO CONSTRUCTION.
8. ALL ELEVATIONS SHOWN ON PLAN INDICATE TOP OF STEEL BEAM UNLESS NOTED OTHERWISE.
9. PROVIDE CHANNEL FRAMES AT ALL SUPPORTED SLAB OPENINGS PER TYPICAL DETAIL ON S404. COORDINATE EXACT NUMBER, LOCATIONS & DIMENSIONS WITH THE APPROPRIATE CONTRACTORS & THE ARCH. & MEP DRAWINGS.
10. PROVIDE FRAMES AT ALL ROOF DRAINS, ROOF HATCHES & OTHER ROOF OPENINGS PER TYPICAL DETAILS ON S404. COORD. EXACT NUMBER, LOCATIONS & DIMENSIONS WITH THE APPROPRIATE CONTRACTORS & THE ARCH. & MEP DWGS.
11. REF. FOUNDATION PLAN NOTES FOR CMU WALL REINFORCING REQUIREMENTS.
12. ALL MASONRY BOND BEAMS, OTHER THAN BOND BEAM LINTELS OVER OPENINGS, SHALL BE "OPEN-CORE" BOND BEAMS TO ALLOW VERTICAL REINFORCING TO PASS THROUGH, UNLESS NOTED OTHERWISE.
13. REF. ARCH. DWGS. FOR MASONRY CONTROL & EXPANSION JOINT LOCATIONS.
14. ALL HORIZONTAL AND DIAGONAL BRIDGING FOR STEEL JOISTS SHALL BE DESIGNED, LOCATED & PROVIDED BY THE JOIST SUPPLIER PER SJI SPECIFICATIONS.
15. FOR ESTIMATING AND BIDDING PURPOSES ONLY, ASSUME AN ADDITIONAL 1/2" THICKNESS OF CONCRETE WILL BE NECESSARY FOR ALL ELEVATED SLABS ON METAL DECK. THE INTENT OF THIS REQUIREMENT IS TO ACCOUNT FOR ANTICIPATED DEAD LOAD DEFLECTIONS IN THE SUPPORTING STRUCTURE. THE FINISHED SLAB SHALL MEET THE FLATNESS REQUIREMENTS DEFINED IN THE SPECIFICATION.
16. PLAN LEGEND:

FF	DENOTES FIN. FLOOR
T/X	DENOTES TOP OF STEEL, SLAB, ETC.
B/X	DENOTES BOTTOM OF LINTEL, ETC.
SE	DENOTES SLAB EDGE DIMENSION MEASURED FROM BEAM OR COLUMN CENTERLINE
DE	DENOTES DECK EDGE ANGLE DIMENSION MEASURED FROM BEAM OR COLUMN CENTERLINE
BP	DENOTES BEAM BEARING PLATE ON CMU WALL
F1	DENOTES 2", 20 GA. GALVANIZED COMPOSITE DECK w/ 3½" NW CONC SLAB w/ 6x6-W2.1xW2.1 WWF, TOTAL T = 5½". REF. DETAIL 1/S404.
F2	DENOTES 2", 20 GA. GALVANIZED COMPOSITE DECK w/ 2" NW CONC SLAB w/ 6x6-W1.4xW1.4 WWF, TOTAL T = 4". REF. DETAIL 2/S404.
R1	DENOTES 1½", 20 GA. GALVANIZED & PRIME-PAINTED WIDE RIB STEEL ROOF DECK. REF. DETAIL 4/S404.
R2	DENOTES 1½", 20 GA. GALVANIZED & PRIME-PAINTED WIDE RIB STEEL ACOUSTIC ROOF DECK. REF. DETAIL 3/S404.
R3	DENOTES 3", 20 GA. GALVANIZED & PRIME-PAINTED DEEP-RIB STEEL ACOUSTIC ROOF DECK. REF. DETAIL 5/S404.
	DENOTES BEAM-TO-COLUMN MOMENT CONNECTION. REF. DETAILS ON S405.
	DENOTES BEAM-THRU-BEAM MOMENT CONNECTION. REF. DETAILS ON S405.
10K LATERAL	DENOTES LATERAL WIND/SEISMIC LOAD TO BE RESISTED BY PRECAST WALLS ALONG COLUMN LINE.
	DENOTES BRACED FRAME OR KICKER LOCATION
	DENOTES APPROX. LOCATION OF OPENING IN DECK/SLAB. REF. DETAILS ON S404 FOR TYPICAL OPENING FRAMES.

17. WIDE-FLANGE BEAM & GIRDER NOTATION:
BEAM REACTIONS SHOWN IN KIPS TO BE USED FOR DESIGN OF SHEAR CONNECTION BY STEEL FABRICATOR'S SSE (ALLOWABLE STRESS DESIGN / LOADS UNFACTORED).
REF. THE STEEL CONNECTION NOTES ON S001 FOR DESIGN OF CONNECTIONS AT BEAMS & GIRDERS WITH NO REACTION SHOWN. THE MIN. SHEAR CONNECTION DESIGN LOAD SHALL BE 15 KIPS.

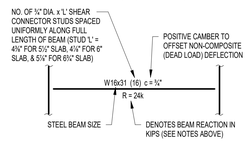

TYPICAL COMPOSITE BEAM DIAGRAM

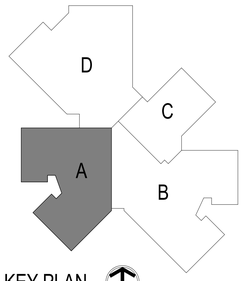

KEY PLAN

NORTH

BCSC TOGETHER WE LEARN

CSO
8831 Keystone Crossing, Indianapolis, IN 46240
317.848.7600 | csoinc.net
© 2018 CSO Architects, Inc. All Rights Reserved

Lynch, Harrison & Brumleve, Inc.

PROJECT:
BARTHOLOMEW CONSOLIDATED SCHOOL CORPORATION
MAPLE GROVE ELEMENTARY
TIPTON LAKES BLVD, COLUMBUS, IN 47201

SCOPE DRAWINGS:
These drawings indicate the general scope of the project in terms of architectural design concept, the dimensions of the building, the major architectural elements and the type of construction and mechanical and electrical systems.
The drawings do not necessarily indicate or describe all work required for full performance and completion of the requirements of the Contract.
On the basis of the general scope indicated or described, the contractor shall furnish all labor and materials required for the proper execution and completion of the work.

REVISIONS:

1	ADD #2	06/17/25

ISSUE DATE	DRAWN BY	CHECKED BY
05/16/2025	NMA/JRO/MDL	MDL

DRAWING TITLE:
SECOND FLOOR FRAMING PLAN - UNIT A

CERTIFIED BY:
MARK D. LaVIER REGISTERED PE19400114 STATE OF INDIANA PROFESSIONAL ENGINEER

DRAWING NUMBER
S202A

PROJECT NUMBER
2024022

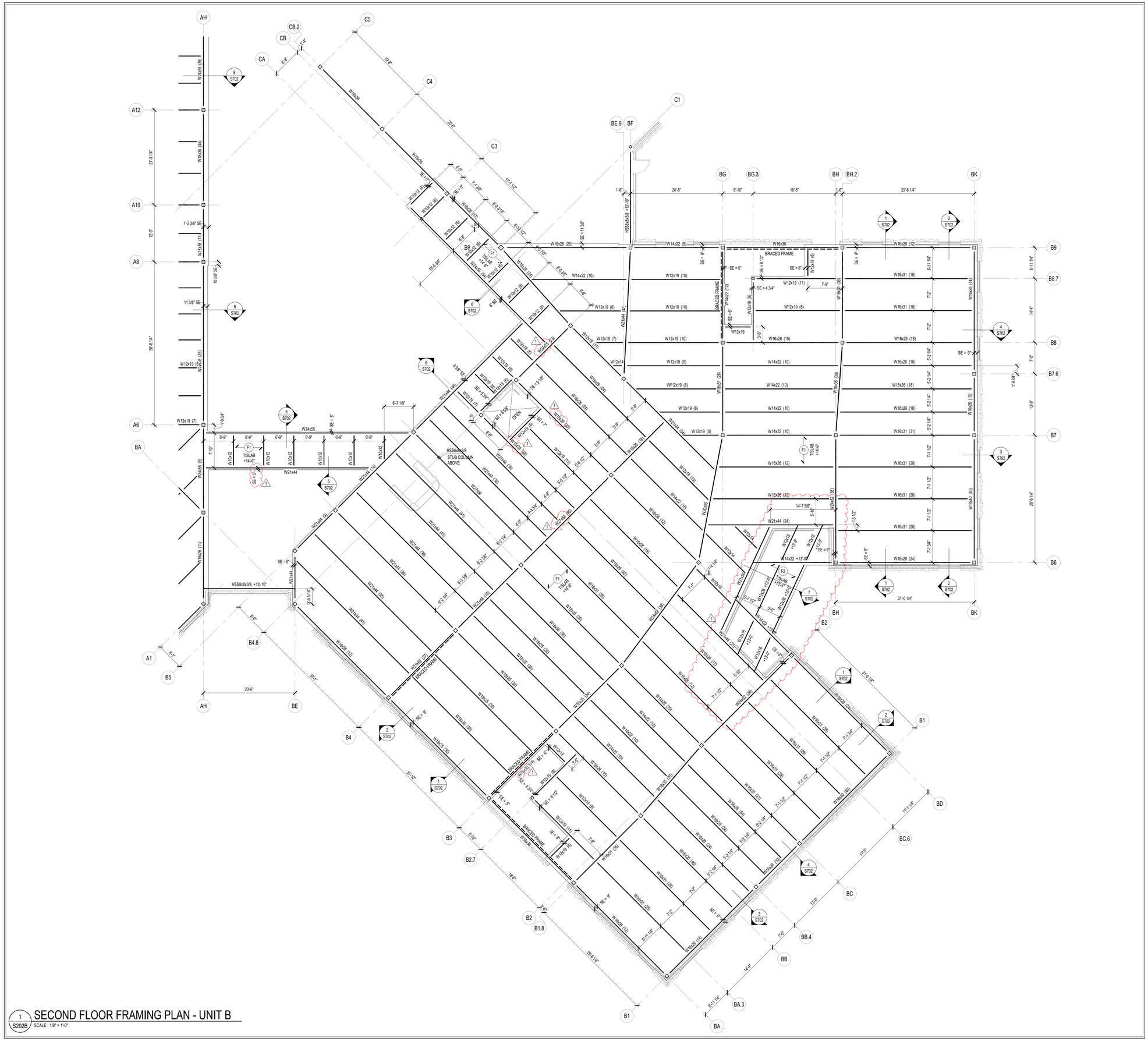

1 S202B SECOND FLOOR FRAMING PLAN - UNIT B
SCALE: 1/8" = 1'-0"

FRAMING PLAN NOTES

1. REF. S001 & S002 FOR STRUCTURAL NOTES, DESIGN DATA, SCHEDULES & LEGENDS.
2. REF. THE S400 SERIES FOR TYPICAL FRAMING AND MASONRY DETAILS
3. ALL CONTRACTORS ARE REQUIRED TO COORDINATE THEIR WORK WITH ALL DISCIPLINES TO AVOID CONFLICTS. THE MECHANICAL, ELECTRICAL, AND PLUMBING ASPECTS ARE NOT IN THE SCOPE OF THESE DRAWINGS. THEREFORE, ALL REQUIRED MATERIALS AND WORK MAY NOT BE INDICATED.
4. ALL ELEVATIONS ARE REFERENCED FROM THE FIRST FLOOR FIN. FLOOR ELEVATION +0'-0". VERIFY USGS ELEVATION WITH CIVIL DWGS.
5. ALL WALLS SHALL BE LAID OUT FROM THE ARCHITECTURAL DRAWINGS.
6. REF. ARCH. DRAWINGS. FOR ALL DIMENSIONS NOT SHOWN. CONTRACTOR SHALL VERIFY ALL DIMENSIONS PRIOR TO CONSTRUCTION AND IMMEDIATELY NOTIFY ARCHITECT/ENGINEER OF ANY DISCREPANCIES.
7. COORDINATE EXACT SIZE & LOCATION OF ANY MECHANICAL OPENINGS IN FLOOR SLAB, ROOF DECK, OR WALLS WITH THE MEP CONTRACTOR(S). LOCATION & SIZE OF ALL DUCT OPENINGS, GRILLES, ETC. SHALL BE VERIFIED PRIOR TO CONSTRUCTION.
8. ALL ELEVATIONS SHOWN ON PLAN INDICATE TOP OF STEEL BEAM UNLESS NOTED OTHERWISE.
9. PROVIDE CHANNEL FRAMES AT ALL SUPPORTED SLAB OPENINGS PER TYPICAL DETAIL ON S404. COORDINATE EXACT NUMBER, LOCATIONS & DIMENSIONS WITH THE APPROPRIATE CONTRACTORS & THE ARCH. & MEP DRAWINGS.
10. PROVIDE FRAMES AT ALL ROOF DRAINS, ROOF HATCHES & OTHER ROOF OPENINGS PER TYPICAL DETAILS ON S404. COORD. EXACT NUMBER, LOCATIONS & DIMENSIONS WITH THE APPROPRIATE CONTRACTORS & THE ARCH. & MEP DWGS.
11. REF. FOUNDATION PLAN NOTES FOR CMU WALL REINFORCING REQUIREMENTS.
12. ALL MASONRY BOND BEAMS, OTHER THAN BOND BEAM LINTELS OVER OPENINGS, SHALL BE "OPEN-CORE" BOND BEAMS TO ALLOW VERTICAL REINFORCING TO PASS THROUGH, UNLESS NOTED OTHERWISE.
13. REF. ARCH. DWGS. FOR MASONRY CONTROL & EXPANSION JOINT LOCATIONS.
14. ALL HORIZONTAL AND DIAGONAL BRIDGING FOR STEEL JOISTS SHALL BE DESIGNED, LOCATED & PROVIDED BY THE JOIST SUPPLIER PER SJI SPECIFICATIONS.
15. FOR ESTIMATING AND BIDDING PURPOSES ONLY, ASSUME AN ADDITIONAL 1/2" THICKNESS OF CONCRETE WILL BE NECESSARY FOR ALL ELEVATED SLABS ON METAL DECK. THE INTENT OF THIS REQUIREMENT IS TO ACCOUNT FOR ANTICIPATED DEAD LOAD DEFLECTIONS IN THE SUPPORTING STRUCTURE. THE FINISHED SLAB SHALL MEET THE FLATNESS REQUIREMENTS DEFINED IN THE SPECIFICATION.
16. PLAN LEGEND:

FF	DENOTES FIN. FLOOR
T/X	DENOTES TOP OF STEEL, SLAB, ETC.
B/X	DENOTES BOTTOM OF LINTEL, ETC.
SE	DENOTES SLAB EDGE DIMENSION MEASURED FROM BEAM OR COLUMN CENTERLINE
DE	DENOTES DECK EDGE ANGLE DIMENSION MEASURED FROM BEAM OR COLUMN CENTERLINE
BP	DENOTES BEAM BEARING PLATE ON CMU WALL
F1	DENOTES 2", 20 GA. GALVANIZED COMPOSITE DECK w/ 3½" NW CONC SLAB w/ 6x6-W2.1xW2.1 WWF, TOTAL T = 5½". REF. DETAIL 1/S404.
F2	DENOTES 2", 20 GA. GALVANIZED COMPOSITE DECK w/ 2" NW CONC SLAB w/ 6x6-W1.4xW1.4 WWF, TOTAL T = 4". REF. DETAIL 2/S404.
R1	DENOTES 1½", 20 GA. GALVANIZED & PRIME-PAINTED WIDE RIB STEEL ROOF DECK. REF. DETAIL 4/S404.
R2	DENOTES 1½", 20 GA. GALVANIZED & PRIME-PAINTED WIDE RIB STEEL ACOUSTIC ROOF DECK. REF. DETAIL 3/S404.
R3	DENOTES 3", 20 GA. GALVANIZED & PRIME-PAINTED DEEP-RIB STEEL ACOUSTIC ROOF DECK. REF. DETAIL 5/S404.
	DENOTES BEAM-TO-COLUMN MOMENT CONNECTION. REF. DETAILS ON S405.
	DENOTES BEAM-THRU-BEAM MOMENT CONNECTION. REF. DETAILS ON S405.
10K LATERAL	DENOTES LATERAL WIND/SEISMIC LOAD TO BE RESISTED BY PRECAST WALLS ALONG COLUMN LINE.
	DENOTES BRACED FRAME OR KICKER LOCATION
	DENOTES APPROX. LOCATION OF OPENING IN DECK/SLAB. REF. DETAILS ON S404 FOR TYPICAL OPENING FRAMES.

17. WIDE-FLANGE BEAM & GIRDER NOTATION:
BEAM REACTIONS SHOWN IN KIPS TO BE USED FOR DESIGN OF SHEAR CONNECTION BY STEEL FABRICATOR'S SSE (ALLOWABLE STRESS DESIGN / LOADS UNFACTORED).
REF. THE STEEL CONNECTION NOTES ON S001 FOR DESIGN OF CONNECTIONS AT BEAMS & GIRDERS WITH NO REACTION SHOWN. THE MIN. SHEAR CONNECTION DESIGN LOAD SHALL BE 15 KIPS.

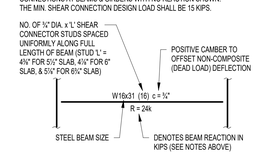

TYPICAL COMPOSITE BEAM DIAGRAM

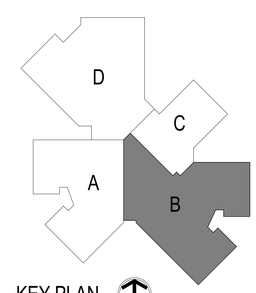

KEY PLAN
NORTH

BCSC TOGETHER WE LEARN

CSO
8831 Keystone Crossing, Indianapolis, IN 46240
317.848.7800 | csoinc.net
© 2018 CSO Architects, Inc. All Rights Reserved

Lynch, Harrison & Brumleve, Inc.

PROJECT:
BARTHOLOMEW CONSOLIDATED SCHOOL CORPORATION
MAPLE GROVE ELEMENTARY
TIPTON LAKES BLVD, COLUMBUS, IN 47201

SCOPE DRAWINGS:
These drawings indicate the general scope of the project including demolition and new work, the general layout of the building, the major architectural elements and the type of structural, mechanical and electrical systems.
The drawings do not necessarily indicate or describe all work required for full performance and completion of the contract documents.
On the basis of the general scope indicated or described, the trade contractors shall furnish all items required for the proper execution and completion of the work.

REVISIONS:

1	ADD #2	06/17/25

ISSUE DATE	DRAWN BY	CHECKED BY
05/16/2025	NMA/JRO/MDL	MDL

DRAWING TITLE:
SECOND FLOOR FRAMING PLAN - UNIT B

CERTIFIED BY:
MARK D. LAVIER REGISTERED PE19400114 STATE OF INDIANA PROFESSIONAL ENGINEER

DRAWING NUMBER
S202B

PROJECT NUMBER
2024022

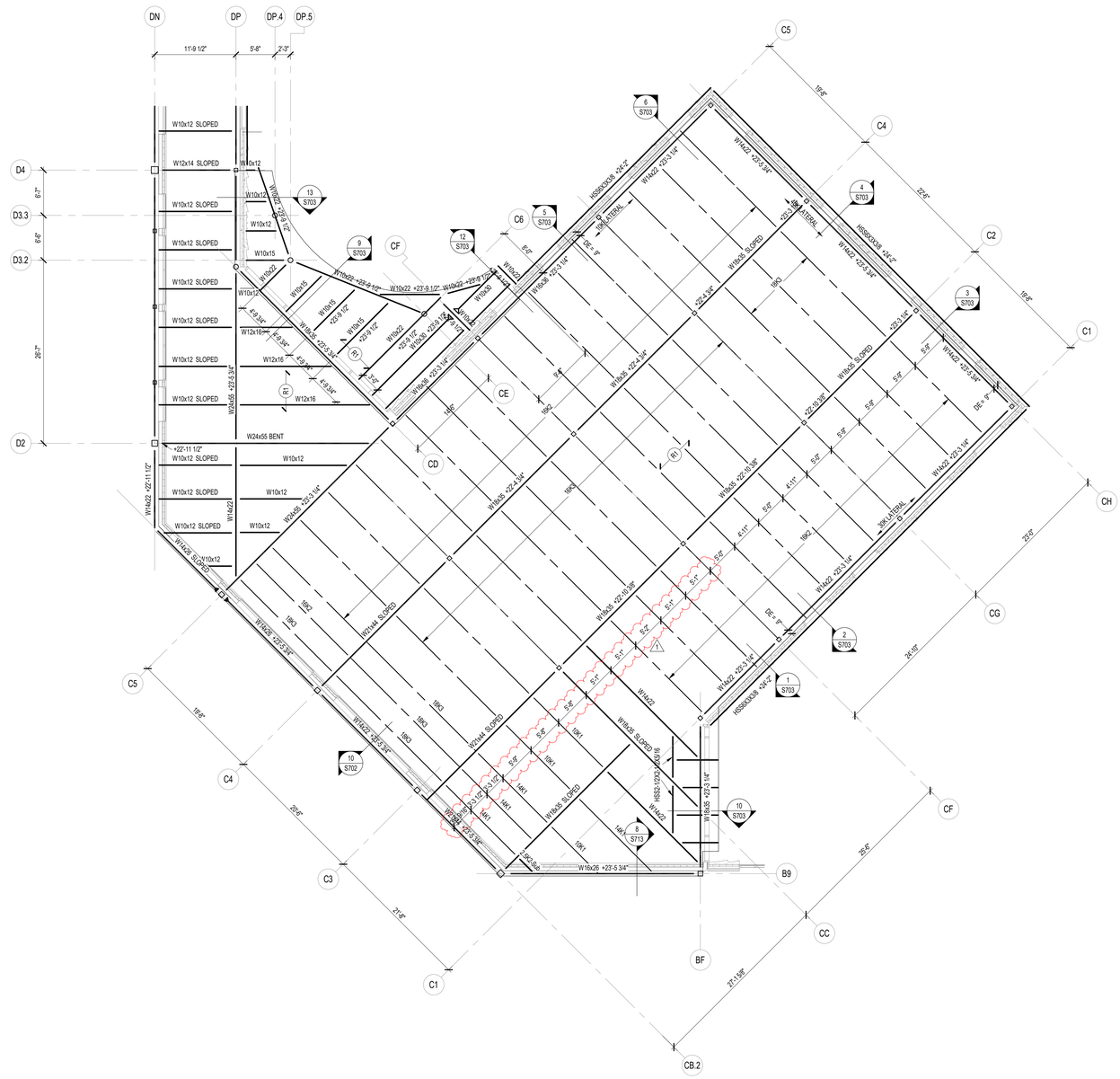

1 S203C LOW ROOF FRAMING PLAN - UNIT C

SCALE: 1/8" = 1'-0"

FRAMING PLAN NOTES

1. REF. S001 & S002 FOR STRUCTURAL NOTES, DESIGN DATA, SCHEDULES & LEGENDS.
2. REF. THE S400 SERIES FOR TYPICAL FRAMING AND MASONRY DETAILS
3. ALL CONTRACTORS ARE REQUIRED TO COORDINATE THEIR WORK WITH ALL DISCIPLINES TO AVOID CONFLICTS. THE MECHANICAL, ELECTRICAL, AND PLUMBING ASPECTS ARE NOT IN THE SCOPE OF THESE DRAWINGS. THEREFORE, ALL REQUIRED MATERIALS AND WORK MAY NOT BE INDICATED.
4. ALL ELEVATIONS ARE REFERENCED FROM THE FIRST FLOOR FIN. FLOOR ELEVATION +0'-0". VERIFY USGS ELEVATION WITH CIVIL DWGS.
5. ALL WALLS SHALL BE LAID OUT FROM THE ARCHITECTURAL DRAWINGS.
6. REF. ARCH. DRAWINGS. FOR ALL DIMENSIONS NOT SHOWN. CONTRACTOR SHALL VERIFY ALL DIMENSIONS PRIOR TO CONSTRUCTION AND IMMEDIATELY NOTIFY ARCHITECT/ENGINEER OF ANY DISCREPANCIES.
7. COORDINATE EXACT SIZE & LOCATION OF ANY MECHANICAL OPENINGS IN FLOOR SLAB, ROOF DECK, OR WALLS WITH THE MEP CONTRACTOR(S). LOCATION & SIZE OF ALL DUCT OPENINGS, GRILLES, ETC. SHALL BE VERIFIED PRIOR TO CONSTRUCTION.
8. ALL ELEVATIONS SHOWN ON PLAN INDICATE TOP OF STEEL BEAM UNLESS NOTED OTHERWISE.
9. PROVIDE CHANNEL FRAMES AT ALL SUPPORTED SLAB OPENINGS PER TYPICAL DETAIL ON S404. COORDINATE EXACT NUMBER, LOCATIONS & DIMENSIONS WITH THE APPROPRIATE CONTRACTORS & THE ARCH. & MEP DRAWINGS.
10. PROVIDE FRAMES AT ALL ROOF DRAINS, ROOF HATCHES & OTHER ROOF OPENINGS PER TYPICAL DETAILS ON S404. COORD. EXACT NUMBER, LOCATIONS & DIMENSIONS WITH THE APPROPRIATE CONTRACTORS & THE ARCH. & MEP DWGS.
11. REF. FOUNDATION PLAN NOTES FOR CMU WALL REINFORCING REQUIREMENTS.
12. ALL MASONRY BOND BEAMS, OTHER THAN BOND BEAM LINTELS OVER OPENINGS, SHALL BE "OPEN-CORE" BOND BEAMS TO ALLOW VERTICAL REINFORCING TO PASS THROUGH, UNLESS NOTED OTHERWISE.
13. REF. ARCH. DWGS. FOR MASONRY CONTROL & EXPANSION JOINT LOCATIONS.
14. ALL HORIZONTAL AND DIAGONAL BRIDGING FOR STEEL JOISTS SHALL BE DESIGNED, LOCATED & PROVIDED BY THE JOIST SUPPLIER PER SJI SPECIFICATIONS.
15. FOR ESTIMATING AND BIDDING PURPOSES ONLY, ASSUME AN ADDITIONAL 1/2" THICKNESS OF CONCRETE WILL BE NECESSARY FOR ALL ELEVATED SLABS ON METAL DECK. THE INTENT OF THIS REQUIREMENT IS TO ACCOUNT FOR ANTICIPATED DEAD LOAD DEFLECTIONS IN THE SUPPORTING STRUCTURE. THE FINISHED SLAB SHALL MEET THE FLATNESS REQUIREMENTS DEFINED IN THE SPECIFICATION.
16. PLAN LEGEND:

FF	DENOTES FIN. FLOOR
T/X	DENOTES TOP OF STEEL, SLAB, ETC.
B/X	DENOTES BOTTOM OF LINTEL, ETC.
SE	DENOTES SLAB EDGE DIMENSION MEASURED FROM BEAM OR COLUMN CENTERLINE
DE	DENOTES DECK EDGE ANGLE DIMENSION MEASURED FROM BEAM OR COLUMN CENTERLINE
BP	DENOTES BEAM BEARING PLATE ON CMU WALL
F1	DENOTES 2", 20 GA. GALVANIZED COMPOSITE DECK w/ 3½" NW CONC SLAB w/ 6x6-W2.1xW2.1 WWF, TOTAL T = 5½". REF. DETAIL 1/S404.
F2	DENOTES 2", 20 GA. GALVANIZED COMPOSITE DECK w/ 2" NW CONC SLAB w/ 6x6-W1.4xW1.4 WWF, TOTAL T = 4". REF. DETAIL 2/S404.
R1	DENOTES 1½", 20 GA. GALVANIZED & PRIME-PAINTED WIDE RIB STEEL ROOF DECK. REF. DETAIL 4/S404.
R2	DENOTES 1½", 20 GA. GALVANIZED & PRIME-PAINTED WIDE RIB STEEL ACOUSTIC ROOF DECK. REF. DETAIL 3/S404.
R3	DENOTES 3", 20 GA. GALVANIZED & PRIME-PAINTED DEEP-RIB STEEL ACOUSTIC ROOF DECK. REF. DETAIL 5/S404.
	DENOTES BEAM-TO-COLUMN MOMENT CONNECTION. REF. DETAILS ON S405.
	DENOTES BEAM-THRU-BEAM MOMENT CONNECTION. REF. DETAILS ON S405.
10K LATERAL	DENOTES LATERAL WIND/SEISMIC LOAD TO BE RESISTED BY PRECAST WALLS ALONG COLUMN LINE.
	DENOTES BRACED FRAME OR KICKER LOCATION
	DENOTES APPROX. LOCATION OF OPENING IN DECK/SLAB. REF. DETAILS ON S404 FOR TYPICAL OPENING FRAMES.

17. WIDE-FLANGE BEAM & GIRDER NOTATION:

BEAM REACTIONS SHOWN IN KIPS TO BE USED FOR DESIGN OF SHEAR CONNECTION BY STEEL FABRICATOR'S SSE (ALLOWABLE STRESS DESIGN / LOADS UNFACTORED).
REF. THE STEEL CONNECTION NOTES ON S001 FOR DESIGN OF CONNECTIONS AT BEAMS & GIRDERS WITH NO REACTION SHOWN. THE MIN. SHEAR CONNECTION DESIGN LOAD SHALL BE 15 KIPS.

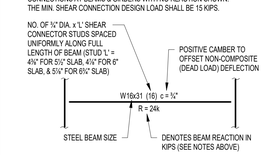

TYPICAL COMPOSITE BEAM DIAGRAM

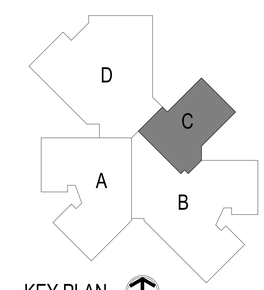

KEY PLAN

NORTH

BCSC TOGETHER WE LEARN

CSO
8831 Keystone Crossing, Indianapolis, IN 46240
317.848.7600 | csoinc.net

© 2018 CSO Architects, Inc. All Rights Reserved

Lynch, Harrison & Brumleve, Inc.

PROJECT:
BARTHOLOMEW CONSOLIDATED SCHOOL CORPORATION
MAPLE GROVE ELEMENTARY
TIPTON LAKES BLVD, COLUMBUS, IN 47201

SCOPE DRAWINGS:
These drawings describe the general scope of the project in terms of architectural design concept, the dimensions of the building, the major architectural elements and the type of structural, mechanical and electrical systems.
The drawings do not necessarily indicate or describe all work required to the satisfactory outcome and completion of the requirements of the Contract.
On the basis of the general scope indicated or described, the trade contractors shall furnish all items required for the proper execution and completion of the work.

REVISIONS:

1	ADD #2	06/17/25

ISSUE DATE	DRAWN BY	CHECKED BY
05/16/2025	NMAURO/MDL	MDL

DRAWING TITLE:
LOW ROOF FRAMING PLAN - UNIT C

CERTIFIED BY:
MARK D. LAVIER
REGISTERED
PE19400114
STATE OF INDIANA
PROFESSIONAL ENGINEER

DRAWING NUMBER
S203C

PROJECT NUMBER
2024022

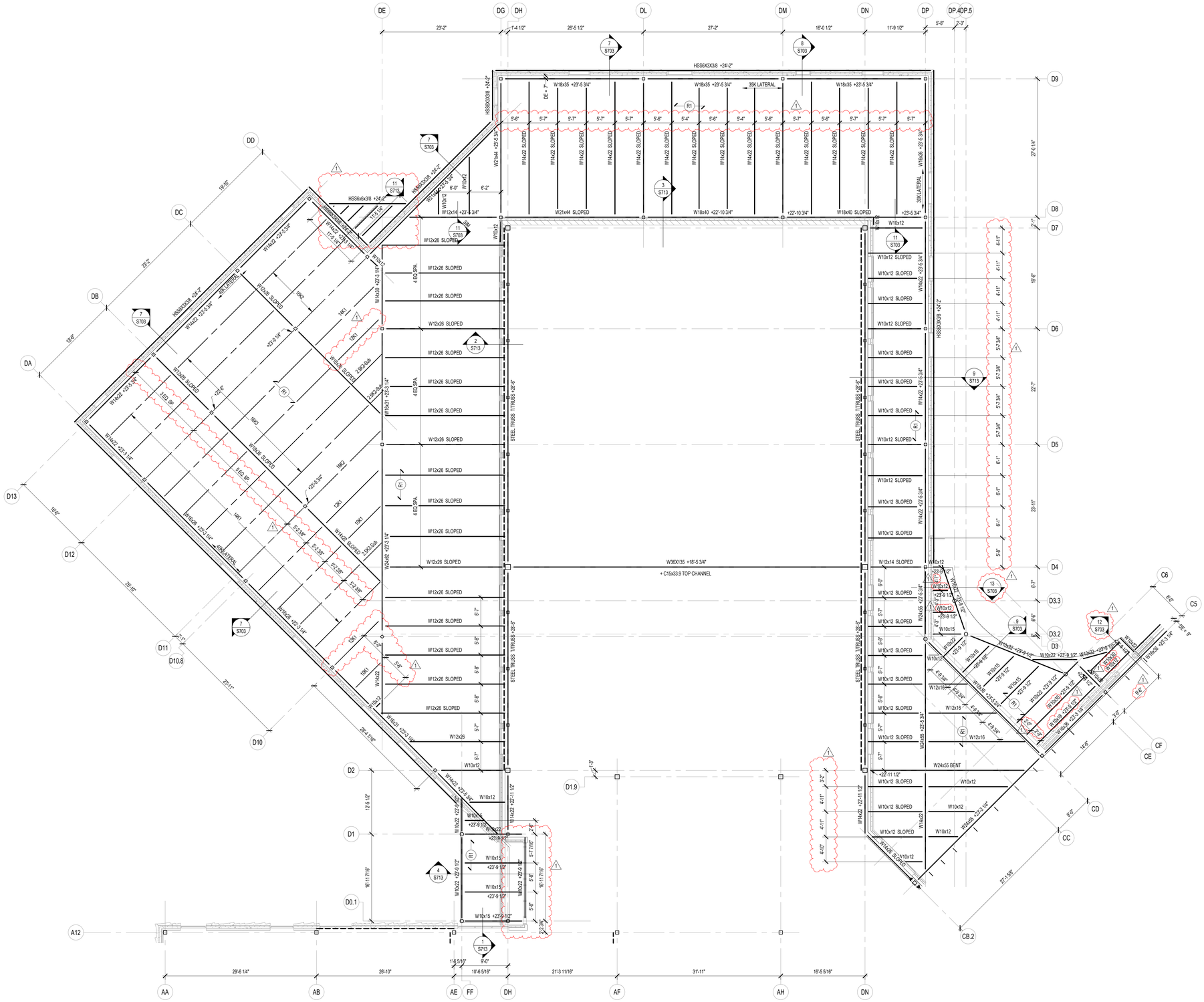

1 S203D LOW ROOF FRAMING PLAN - UNIT D

SCALE: 1/8" = 1'-0"

FRAMING PLAN NOTES

1. REF. S001 & S002 FOR STRUCTURAL NOTES, DESIGN DATA, SCHEDULES & LEGENDS.
2. REF. THE S400 SERIES FOR TYPICAL FRAMING AND MASONRY DETAILS
3. ALL CONTRACTORS ARE REQUIRED TO COORDINATE THEIR WORK WITH ALL DISCIPLINES TO AVOID CONFLICTS. THE MECHANICAL, ELECTRICAL, AND PLUMBING ASPECTS ARE NOT IN THE SCOPE OF THESE DRAWINGS. THEREFORE, ALL REQUIRED MATERIALS AND WORK MAY NOT BE INDICATED.
4. ALL ELEVATIONS ARE REFERENCED FROM THE FIRST FLOOR FIN. FLOOR ELEVATION +0'-0". VERIFY USGS ELEVATION WITH CIVIL DWGS.
5. ALL WALLS SHALL BE LAID OUT FROM THE ARCHITECTURAL DRAWINGS.
6. REF. ARCH. DRAWINGS. FOR ALL DIMENSIONS NOT SHOWN. CONTRACTOR SHALL VERIFY ALL DIMENSIONS PRIOR TO CONSTRUCTION AND IMMEDIATELY NOTIFY ARCHITECT/ENGINEER OF ANY DISCREPANCIES.
7. COORDINATE EXACT SIZE & LOCATION OF ANY MECHANICAL OPENINGS IN FLOOR SLAB, ROOF DECK, OR WALLS WITH THE MEP CONTRACTOR(S). LOCATION & SIZE OF ALL DUCT OPENINGS, GRILLES, ETC. SHALL BE VERIFIED PRIOR TO CONSTRUCTION.
8. ALL ELEVATIONS SHOWN ON PLAN INDICATE TOP OF STEEL BEAM UNLESS NOTED OTHERWISE.
9. PROVIDE CHANNEL FRAMES AT ALL SUPPORTED SLAB OPENINGS PER TYPICAL DETAIL ON S404. COORDINATE EXACT NUMBER, LOCATIONS & DIMENSIONS WITH THE APPROPRIATE CONTRACTORS & THE ARCH. & MEP DRAWINGS.
10. PROVIDE FRAMES AT ALL ROOF DRAINS, ROOF HATCHES & OTHER ROOF OPENINGS PER TYPICAL DETAILS ON S404. COORD. EXACT NUMBER, LOCATIONS & DIMENSIONS WITH THE APPROPRIATE CONTRACTORS & THE ARCH. & MEP DWGS.
11. REF. FOUNDATION PLAN NOTES FOR CMU WALL REINFORCING REQUIREMENTS.
12. ALL MASONRY BOND BEAMS, OTHER THAN BOND BEAM LINTELS OVER OPENINGS, SHALL BE "OPEN-CORE" BOND BEAMS TO ALLOW VERTICAL REINFORCING TO PASS THROUGH, UNLESS NOTED OTHERWISE.
13. REF. ARCH. DWGS. FOR MASONRY CONTROL & EXPANSION JOINT LOCATIONS.
14. ALL HORIZONTAL AND DIAGONAL BRIDGING FOR STEEL JOISTS SHALL BE DESIGNED, LOCATED & PROVIDED BY THE JOIST SUPPLIER PER SJI SPECIFICATIONS.
15. FOR ESTIMATING AND BIDDING PURPOSES ONLY, ASSUME AN ADDITIONAL 1/2" THICKNESS OF CONCRETE WILL BE NECESSARY FOR ALL ELEVATED SLABS ON METAL DECK. THE INTENT OF THIS REQUIREMENT IS TO ACCOUNT FOR ANTICIPATED DEAD LOAD DEFLECTIONS IN THE SUPPORTING STRUCTURE. THE FINISHED SLAB SHALL MEET THE FLATNESS REQUIREMENTS DEFINED IN THE SPECIFICATION.
16. PLAN LEGEND:

FF	DENOTES FIN. FLOOR
T/X	DENOTES TOP OF STEEL, SLAB, ETC.
B/X	DENOTES BOTTOM OF LINTEL, ETC.
SE	DENOTES SLAB EDGE DIMENSION MEASURED FROM BEAM OR COLUMN CENTERLINE
DE	DENOTES DECK EDGE ANGLE DIMENSION MEASURED FROM BEAM OR COLUMN CENTERLINE
BP	DENOTES BEAM BEARING PLATE ON CMU WALL
F1	DENOTES 2", 20 GA. GALVANIZED COMPOSITE DECK w/ 3½" NW CONC SLAB w/ 6x6-W2.1xW2.1 WWF, TOTAL T = 5½". REF. DETAIL 1/S404.
F2	DENOTES 2", 20 GA. GALVANIZED COMPOSITE DECK w/ 2" NW CONC SLAB w/ 6x6-W1.4xW1.4 WWF, TOTAL T = 4". REF. DETAIL 2/S404.
R1	DENOTES 1½", 20 GA. GALVANIZED & PRIME-PAINTED WIDE RIB STEEL ROOF DECK. REF. DETAIL 4/S404.
R2	DENOTES 1½", 20 GA. GALVANIZED & PRIME-PAINTED WIDE RIB STEEL ACOUSTIC ROOF DECK. REF. DETAIL 3/S404.
R3	DENOTES 3", 20 GA. GALVANIZED & PRIME-PAINTED DEEP-RIB STEEL ACOUSTIC ROOF DECK. REF. DETAIL 5/S404.
	DENOTES BEAM-TO-COLUMN MOMENT CONNECTION. REF. DETAILS ON S405.
	DENOTES BEAM-THRU-BEAM MOMENT CONNECTION. REF. DETAILS ON S405.
10K LATERAL	DENOTES LATERAL WIND/SEISMIC LOAD TO BE RESISTED BY PRECAST WALLS ALONG COLUMN LINE.
	DENOTES BRACED FRAME OR KICKER LOCATION
	DENOTES APPROX. LOCATION OF OPENING IN DECK/SLAB. REF. DETAILS ON S404 FOR TYPICAL OPENING FRAMES.

17. WIDE-FLANGE BEAM & GIRDER NOTATION:
BEAM REACTIONS SHOWN IN KIPS TO BE USED FOR DESIGN OF SHEAR CONNECTION BY STEEL FABRICATOR'S SSE (ALLOWABLE STRESS DESIGN / LOADS UNFACTORED).
REF. THE STEEL CONNECTION NOTES ON S001 FOR DESIGN OF CONNECTIONS AT BEAMS & GIRDERS WITH NO REACTION SHOWN.
THE MIN. SHEAR CONNECTION DESIGN LOAD SHALL BE 15 KIPS.

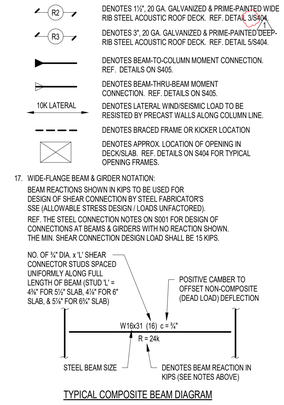

TYPICAL COMPOSITE BEAM DIAGRAM

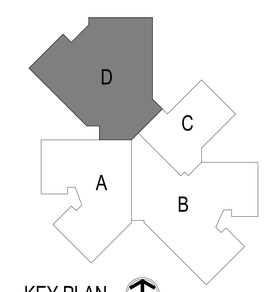

KEY PLAN

NORTH

BCSC TOGETHER WE LEARN

CSO
8831 Keystone Crossing, Indianapolis, IN 46240
317.848.7600 | csoinc.net
© 2018 CSO Architects, Inc. All Rights Reserved

Lynch, Harrison & Brumleve, Inc.

PROJECT:
BARTHOLOMEW CONSOLIDATED SCHOOL CORPORATION
MAPLE GROVE ELEMENTARY
TIPTON LAKES BLVD, COLUMBUS, IN 47201

SCOPE DRAWINGS:
These drawings indicate the general scope of the project. In the event that additional work is required to complete the building, the major architectural elements and the type of structural, mechanical and electrical systems shall be as shown on the contract documents. Provide all work required for full performance and completion of the requirements of the Contract.
On the basis of the general scope indicated or described, the trade contractors shall furnish all items required for the proper execution and completion of the work.

REVISIONS:

1	ADD #2	06/17/25

ISSUE DATE	DRAWN BY	CHECKED BY
05/16/2025	NMA/JRO/MDL	MDL

DRAWING TITLE:
LOW ROOF FRAMING PLAN - UNIT D

CERTIFIED BY:
MARK D. LAVIER
REGISTERED
PE19400114
STATE OF INDIANA
PROFESSIONAL ENGINEER

DRAWING NUMBER
S203D

PROJECT NUMBER
2024022

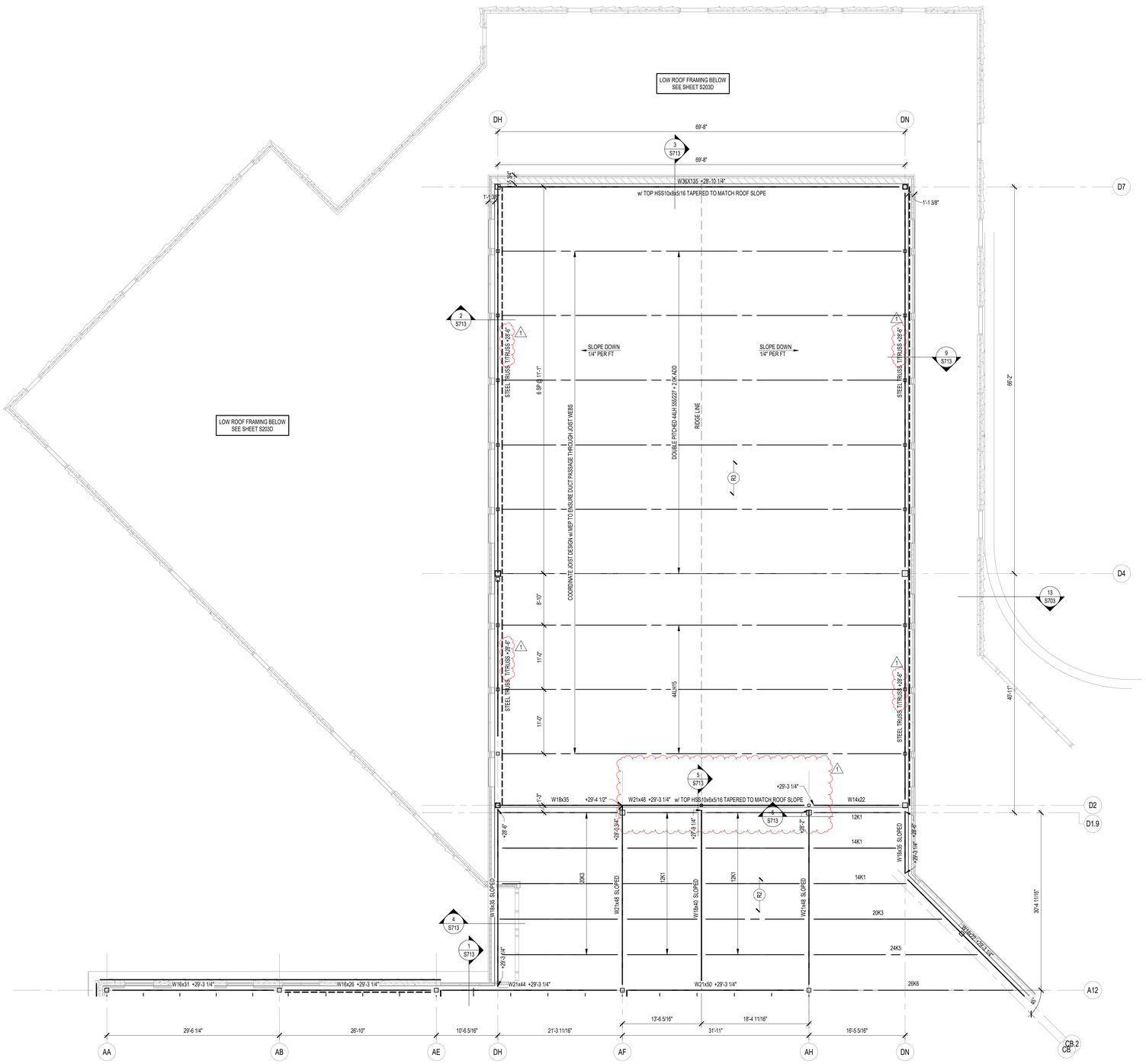

1 S204D ROOF FRAMING PLAN - UNIT D

SCALE: 1/8" = 1'-0"

FRAMING PLAN NOTES

1. REF. S001 & S002 FOR STRUCTURAL NOTES, DESIGN DATA, SCHEDULES & LEGENDS.
2. REF. THE S400 SERIES FOR TYPICAL FRAMING AND MASONRY DETAILS.
3. ALL CONTRACTORS ARE REQUIRED TO COORDINATE THEIR WORK WITH ALL DISCIPLINES TO AVOID CONFLICTS. THE MECHANICAL, ELECTRICAL, AND PLUMBING ASPECTS ARE NOT IN THE SCOPE OF THESE DRAWINGS. THEREFORE, ALL REQUIRED MATERIALS AND WORK MAY NOT BE INDICATED.
4. ALL ELEVATIONS ARE REFERENCED FROM THE FIRST FLOOR FIN. FLOOR ELEVATION +0'-0". VERIFY USGS ELEVATION WITH CIVIL DWGS.
5. ALL WALLS SHALL BE LAID OUT FROM THE ARCHITECTURAL DRAWINGS.
6. REF. ARCH. DRAWINGS. FOR ALL DIMENSIONS NOT SHOWN. CONTRACTOR SHALL VERIFY ALL DIMENSIONS PRIOR TO CONSTRUCTION AND IMMEDIATELY NOTIFY ARCHITECT/ENGINEER OF ANY DISCREPANCIES.
7. COORDINATE EXACT SIZE & LOCATION OF ANY MECHANICAL OPENINGS IN FLOOR SLAB, ROOF DECK, OR WALLS WITH THE MEP CONTRACTOR(S). LOCATION & SIZE OF ALL DUCT OPENINGS, GRILLES, ETC. SHALL BE VERIFIED PRIOR TO CONSTRUCTION.
8. ALL ELEVATIONS SHOWN ON PLAN INDICATE TOP OF STEEL BEAM UNLESS NOTED OTHERWISE.
9. PROVIDE CHANNEL FRAMES AT ALL SUPPORTED SLAB OPENINGS PER TYPICAL DETAIL ON S404. COORDINATE EXACT NUMBER, LOCATIONS & DIMENSIONS WITH THE APPROPRIATE CONTRACTORS & THE ARCH. & MEP DRAWINGS.
10. PROVIDE FRAMES AT ALL ROOF DRAINS, ROOF HATCHES & OTHER ROOF OPENINGS PER TYPICAL DETAILS ON S404. COORD. EXACT NUMBER, LOCATIONS & DIMENSIONS WITH THE APPROPRIATE CONTRACTORS & THE ARCH. & MEP DWGS.
11. REF. FOUNDATION PLAN NOTES FOR CMU WALL REINFORCING REQUIREMENTS.
12. ALL MASONRY BOND BEAMS, OTHER THAN BOND BEAM LINTELS OVER OPENINGS, SHALL BE "OPEN-CORE" BOND BEAMS TO ALLOW VERTICAL REINFORCING TO PASS THROUGH, UNLESS NOTED OTHERWISE.
13. REF. ARCH. DWGS. FOR MASONRY CONTROL & EXPANSION JOINT LOCATIONS.
14. ALL HORIZONTAL AND DIAGONAL BRIDGING FOR STEEL JOISTS SHALL BE DESIGNED, LOCATED & PROVIDED BY THE JOIST SUPPLIER PER SJI SPECIFICATIONS.
15. FOR ESTIMATING AND BIDDING PURPOSES ONLY, ASSUME AN ADDITIONAL 1/2" THICKNESS OF CONCRETE WILL BE NECESSARY FOR ALL ELEVATED SLABS ON METAL DECK. THE INTENT OF THIS REQUIREMENT IS TO ACCOUNT FOR ANTICIPATED DEAD LOAD DEFLECTIONS IN THE SUPPORTING STRUCTURE. THE FINISHED SLAB SHALL MEET THE FLATNESS REQUIREMENTS DEFINED IN THE SPECIFICATION.
16. PLAN LEGEND:

FF	DENOTES FIN. FLOOR
T/X	DENOTES TOP OF STEEL, SLAB, ETC.
B/X	DENOTES BOTTOM OF LINTEL, ETC.
SE	DENOTES SLAB EDGE DIMENSION MEASURED FROM BEAM OR COLUMN CENTERLINE
DE	DENOTES DECK EDGE ANGLE DIMENSION MEASURED FROM BEAM OR COLUMN CENTERLINE
BP	DENOTES BEAM BEARING PLATE ON CMU WALL
F1	DENOTES 2", 20 GA. GALVANIZED COMPOSITE DECK w/ 3½" NW CONC SLAB w/ 6x6-W2.1xW2.1 WWF, TOTAL T = 5½". REF. DETAIL 1/S404.
F2	DENOTES 2", 20 GA. GALVANIZED COMPOSITE DECK w/ 2" NW CONC SLAB w/ 6x6-W1.4xW1.4 WWF, TOTAL T = 4". REF. DETAIL 2/S404.
R1	DENOTES 1½", 20 GA. GALVANIZED & PRIME-PAINTED WIDE RIB STEEL ROOF DECK. REF. DETAIL 4/S404.
R2	DENOTES 1½", 20 GA. GALVANIZED & PRIME-PAINTED WIDE RIB STEEL ACOUSTIC ROOF DECK. REF. DETAIL 3/S404.
R3	DENOTES 3", 20 GA. GALVANIZED & PRIME-PAINTED DEEP-RIB STEEL ACOUSTIC ROOF DECK. REF. DETAIL 5/S404.
	DENOTES BEAM-TO-COLUMN MOMENT CONNECTION. REF. DETAILS ON S405.
	DENOTES BEAM-THRU-BEAM MOMENT CONNECTION. REF. DETAILS ON S405.
10K LATERAL	DENOTES LATERAL WIND/SEISMIC LOAD TO BE RESISTED BY PRECAST WALLS ALONG COLUMN LINE.
	DENOTES BRACED FRAME OR KICKER LOCATION
	DENOTES APPROX. LOCATION OF OPENING IN DECK/SLAB. REF. DETAILS ON S404 FOR TYPICAL OPENING FRAMES.

17. WIDE-FLANGE BEAM & GIRDER NOTATION:

BEAM REACTIONS SHOWN IN KIPS TO BE USED FOR DESIGN OF SHEAR CONNECTION BY STEEL FABRICATOR'S SSE (ALLOWABLE STRESS DESIGN / LOADS UNFACTORED).
REF. THE STEEL CONNECTION NOTES ON S001 FOR DESIGN OF CONNECTIONS AT BEAMS & GIRDERS WITH NO REACTION SHOWN. THE MIN. SHEAR CONNECTION DESIGN LOAD SHALL BE 15 KIPS.

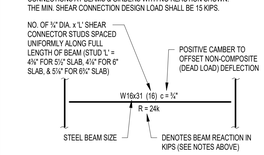

TYPICAL COMPOSITE BEAM DIAGRAM

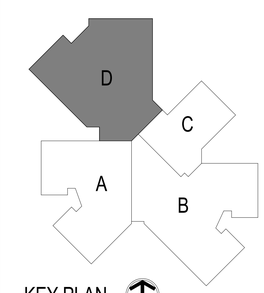

KEY PLAN

NORTH

BCSC TOGETHER WE LEARN

CSO
8831 Keystone Crossing, Indianapolis, IN 46240
317.848.7600 | csoinc.net
© 2018 CSO Architects, Inc. All Rights Reserved

Lynch, Harrison & Brumleve, Inc.

PROJECT:
BARTHOLOMEW CONSOLIDATED SCHOOL CORPORATION
MAPLE GROVE ELEMENTARY
TIPTON LAKES BLVD, COLUMBUS, IN 47201

SCOPE DRAWINGS:
These drawings indicate the general scope of the project. They are intended to describe the general architectural features of the building, the major architectural elements and the type of structural, mechanical and electrical systems.
The drawings do not necessarily indicate or describe all work required for full performance and completion of the contract work. Omissions:
On the basis of the general scope indicated or described, the trade contractors shall furnish all items required for the proper execution and completion of the work.

REVISIONS:

1	ADD #2	06/17/25

ISSUE DATE	DRAWN BY	CHECKED BY
05/16/2025	NMA/URO/MDL	MDL

DRAWING TITLE:
ROOF FRAMING PLAN - UNIT D

CERTIFIED BY:
MARK D. LAVIER
REGISTERED
PE19400114
STATE OF INDIANA
PROFESSIONAL ENGINEER

DRAWING NUMBER
S204D

PROJECT NUMBER
2024022

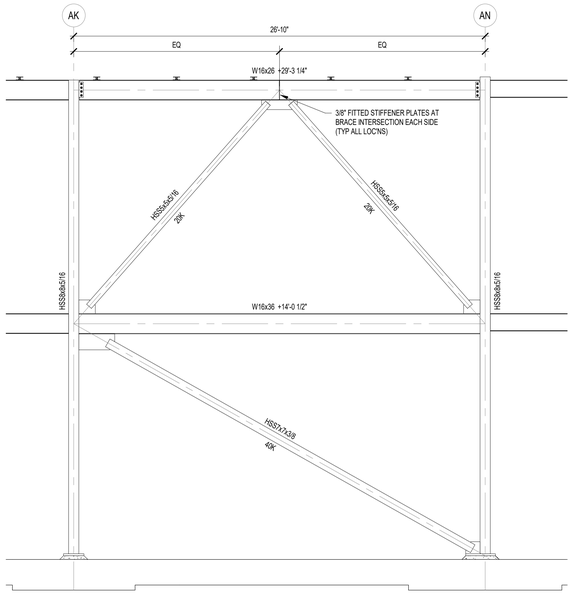

1 S301 FRAMING ELEVATION GRID LINE A1
SCALE: 1/4" = 1'-0"

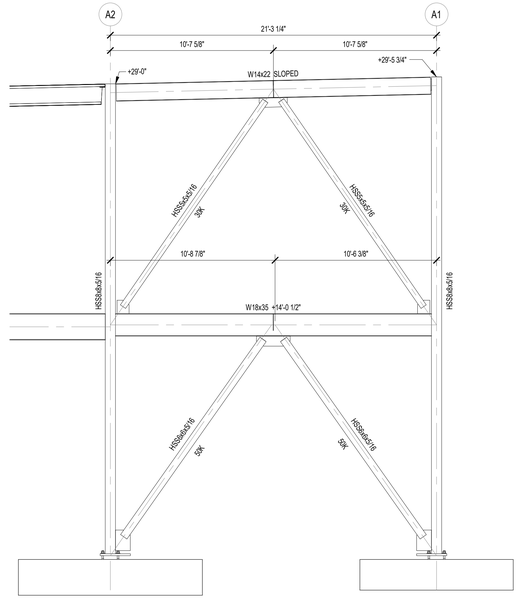

2 S301 FRAMING ELEVATION - GRID LINE AN
SCALE: 1/4" = 1'-0"

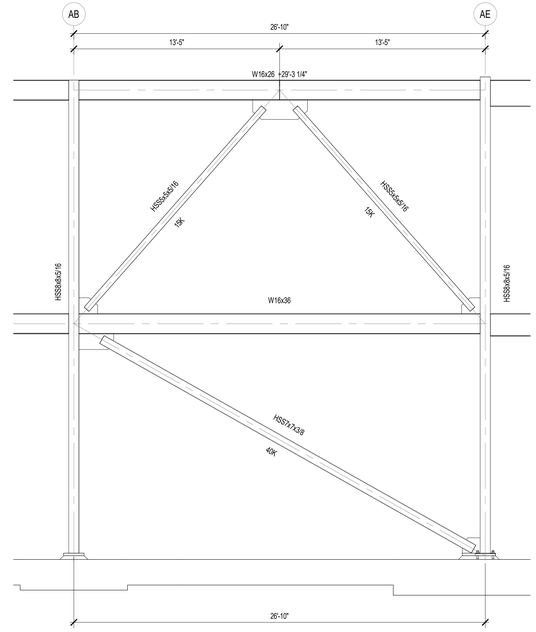

3 S301 FRAMING ELEVATION - GRID LINE A12
SCALE: 1/4" = 1'-0"

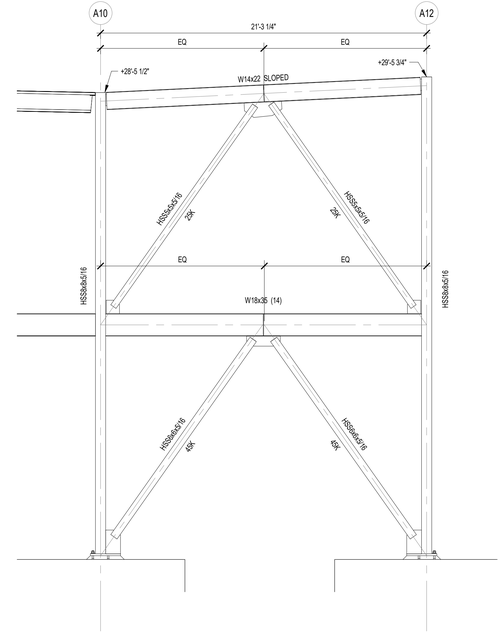

4 S301 FRAMING ELEVATION - GRID LINE AE
SCALE: 1/4" = 1'-0"

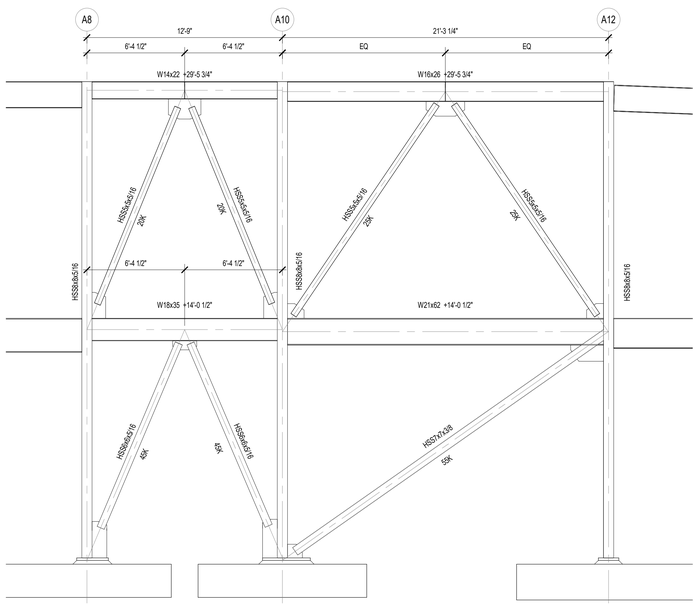

5 S301 FRAMING ELEVATION - GRID LINE AF
SCALE: 1/4" = 1'-0"

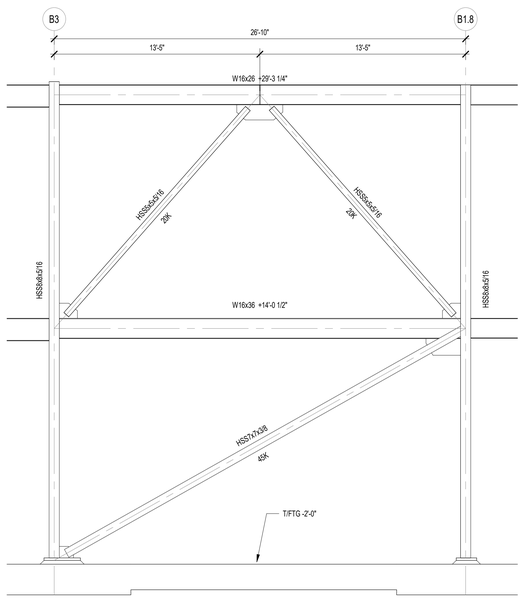

6 S301 FRAMING ELEVATION - GRID LINE BA
SCALE: 1/4" = 1'-0"

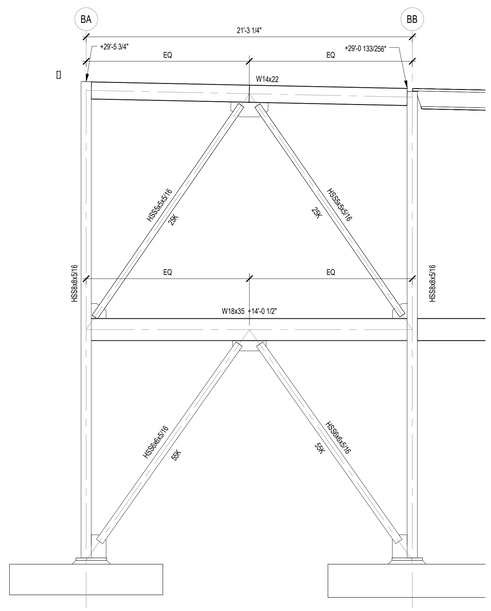

7 S301 FRAMING ELEVATION - GRID LINE B3
SCALE: 1/4" = 1'-0"

BRACING NOTES

1. ALL BRACING MEMBER WORKING POINTS SHALL BE LOCATED AT THE INTERSECTIONS OF MEMBER NEUTRAL AXES AND/OR AT BEAM MID-SPAN, UNLESS NOTED OTHERWISE.
2. ALL GUSSET PLATE CONNECTION MATERIAL SHALL BE ASTM A36 STEEL WITH A MINIMUM THICKNESS OF 1/2".
3. PROVIDE (1) ERECTION BOLT AT EACH END OF BRACING MEMBERS AND WELD AFTER ERECTION.
4. DESIGN ALL BRACING CONNECTIONS TO RESIST THE AXIAL BRACE FORCES SHOWN ON THE ELEVATIONS. FORCES NOTED REPRESENT MAXIMUM ASD LOAD COMBINATIONS PER AISC 360-10 AND THE 2012 INTERNATIONAL BUILDING CODE.
5. PROVIDE FULL-DEPTH WEB STIFFENER PLATES (MIN. 3/8" THICKNESS) ON EACH SIDE OF BEAM WEBS, TYPICAL WHERE BRACING MEMBER CENTERLINE INTERSECTS BEAM NEUTRAL AXIS AWAY FROM COLUMN CENTERLINE.
6. BOLTED BEAM-TO-COLUMN CONNECTIONS AT ALL BRACED FRAMES SHALL BE PRETENSIONED JOINTS USING TENSION-CONTROL BOLTS.
7. REFERENCE FRAMING PLANS FOR ANY BEAM OR COLUMN SIZES, GRID DIMENSIONS, OR TOP OF STEEL ELEVATIONS NOT SHOWN. IF DISCREPANCIES OCCUR BETWEEN THE PLANS AND ELEVATIONS, THE PLANS SHALL GOVERN.
8. REFERENCE FOUNDATION PLAN FOR FOUNDATION INFORMATION.

BCSC TOGETHER WE LEARN

CSO
8831 Keystone Crossing, Indianapolis, IN 46240
317.848.7600 | csoinc.net
© 2018 CSO Architects, Inc. All Rights Reserved

Lynch, Harrison & Brumleve, Inc.

PROJECT:
BARTHOLOMEW CONSOLIDATED SCHOOL CORPORATION
MAPLE GROVE ELEMENTARY
TIPTON LAKES BLVD, COLUMBUS, IN 47201

SCOPE DRAWINGS:
These drawings indicate the general scope of the project in terms of architectural design concept, the dimensions of the building, the major architectural elements and the type of structural, mechanical and electrical systems. These drawings and the accompanying specifications describe all work required for full performance and completion of the requirements of the Contract.
Within the general architectural scope indicated or described, the trade contractors shall furnish all items required for the proper execution and completion of the work.

REVISIONS:

1	ADD #2	06/17/25

ISSUE DATE	DRAWN BY	CHECKED BY
05/16/2025	NMA/JRO/MDL	MDL

DRAWING TITLE:
FRAMING ELEVATIONS

CERTIFIED BY:
MARK D. LAVIER
REGISTERED
PE19400114
STATE OF INDIANA
PROFESSIONAL ENGINEER

DRAWING NUMBER
S301 1

PROJECT NUMBER
2024022

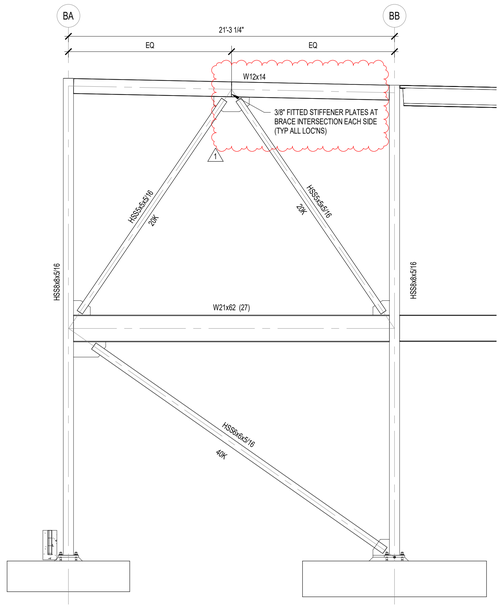

1 S302 FRAMING ELEVATION - GRID LINE B4
SCALE: 1/4" = 1'-0"

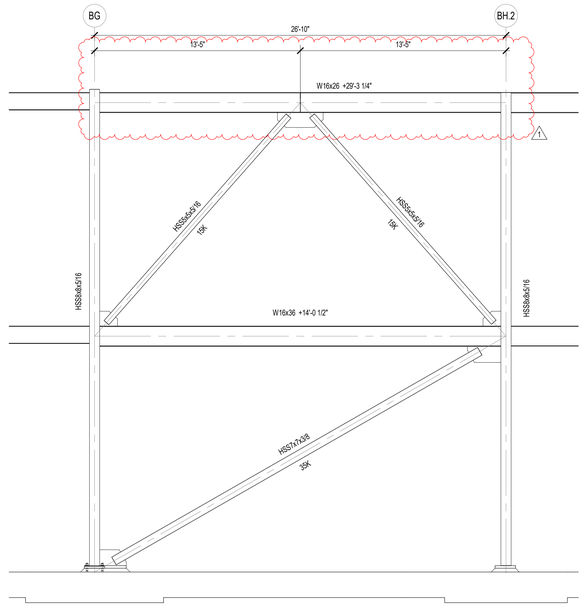

2 S302 FRAMING ELEVATION - GRID LINE B9
SCALE: 1/4" = 1'-0"

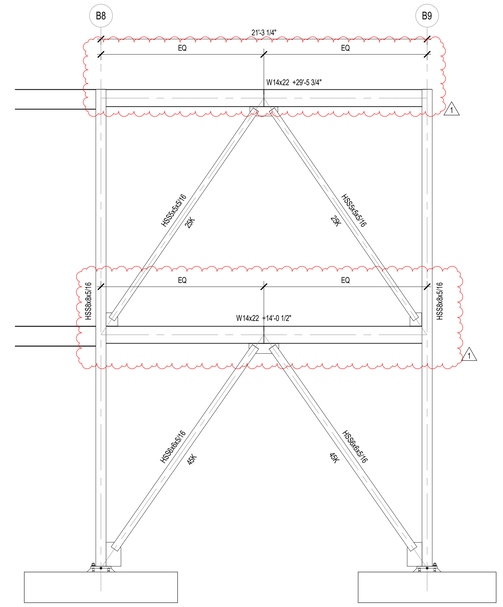

3 S302 FRAMING ELEVATION - GRID LINE BG
SCALE: 1/4" = 1'-0"

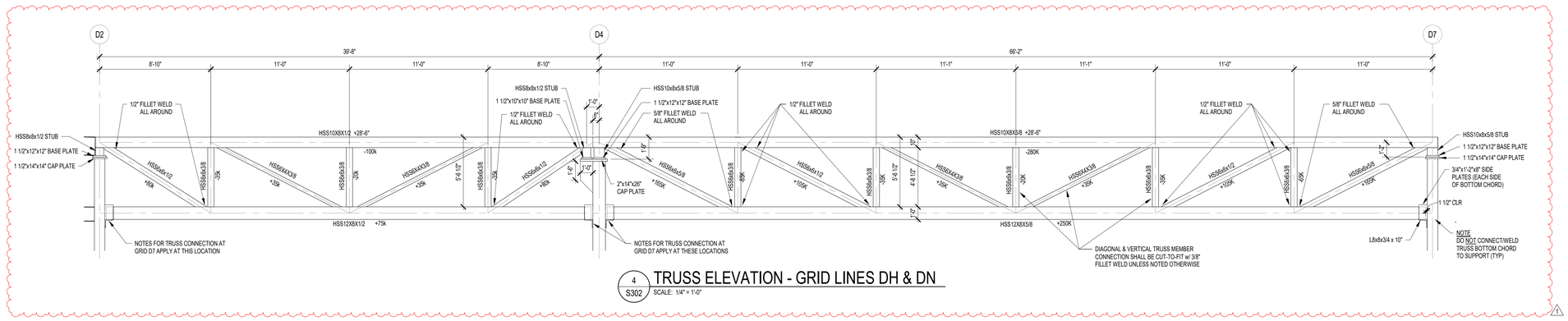

4 S302 TRUSS ELEVATION - GRID LINES DH & DN
SCALE: 1/4" = 1'-0"

BRACING NOTES

1. ALL BRACING MEMBER WORKING POINTS SHALL BE LOCATED AT THE INTERSECTIONS OF MEMBER NEUTRAL AXES AND/OR AT BEAM MID-SPAN, UNLESS NOTED OTHERWISE.
2. ALL GUSSET PLATE CONNECTION MATERIAL SHALL BE ASTM A36 STEEL WITH A MINIMUM THICKNESS OF 1/2".
3. PROVIDE (1) ERECTION BOLT AT EACH END OF BRACING MEMBERS AND WELD AFTER ERECTION.
4. DESIGN ALL BRACING CONNECTIONS TO RESIST THE AXIAL BRACE FORCES SHOWN ON THE ELEVATIONS. FORCES NOTED REPRESENT MAXIMUM ASD LOAD COMBINATIONS PER AISC 360-10 AND THE 2012 INTERNATIONAL BUILDING CODE.
5. PROVIDE FULL-DEPTH WEB STIFFENER PLATES (MIN. 3/8" THICKNESS) ON EACH SIDE OF BEAM WEBS, TYPICAL WHERE BRACING MEMBER CENTERLINE INTERSECTS BEAM NEUTRAL AXIS AWAY FROM COLUMN CENTERLINE .
6. BOLTED BEAM-TO-COLUMN CONNECTIONS AT ALL BRACED FRAMES SHALL BE PRETENSIONED JOINTS USING TENSION-CONTROL BOLTS.
7. REFERENCE FRAMING PLANS FOR ANY BEAM OR COLUMN SIZES, GRID DIMENSIONS, OR TOP OF STEEL ELEVATIONS NOT SHOWN. IF DISCREPANCIES OCCUR BETWEEN THE PLANS AND ELEVATIONS, THE PLANS SHALL GOVERN.
8. REFERENCE FOUNDATION PLAN FOR FOUNDATION INFORMATION.

BCSC TOGETHER WE LEARN

CSO
8831 Keystone Crossing, Indianapolis, IN 46240
317.848.7800 | csoinc.net
© 2016 CSO Architects, Inc. All Rights Reserved

Lynch, Harrison & Brumleve, Inc.

PROJECT:
BARTHOLOMEW CONSOLIDATED SCHOOL CORPORATION
MAPLE GROVE ELEMENTARY
TIPTON LAKES BLVD, COLUMBUS, IN 47201

SCOPE DRAWINGS:
These drawings indicate the general scope of the project in terms of architectural design concept, the dimensions of the building, the general construction materials and the type of structural, mechanical and electrical systems .
The drawings do not necessarily indicate or describe all work required for the complete performance and completion of the requirements of the Contract.
On the basis of the general scope indicated or described, the trade contractors shall furnish all items required for the proper execution and completion of the work.

REVISIONS:

1	ADD #2	06/17/25

ISSUE DATE	DRAWN BY	CHECKED BY
05/16/2025	NMA/JRO/MDL	MDL

DRAWING TITLE:
FRAMING ELEVATIONS

CERTIFIED BY:
MARK D. LAVIER
REGISTERED
PE19400114
STATE OF
INDIANA
PROFESSIONAL ENGINEER

DRAWING NUMBER
S302

PROJECT NUMBER
2024022

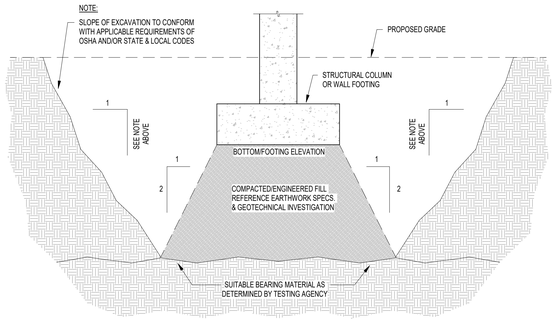

1. REFER TO THE SPECIFICATIONS FOR APPLICATION OF UNIT COSTS FOR REMOVAL OF UNSUITABLE BEARING MATERIAL & REPLACEMENT WITH COMPACTED, ENGINEERED FILL
2. REFER TO THE GEOTECHNICAL ENGINEERING REPORT FOR ADDITIONAL INFORMATION RE: EXPECTED SOIL CONDITIONS, SUITABILITY OF EX. SOILS FOR USE AS ENGINEERED FILL, GROUNDWATER CONDITIONS, ETC.

1 S402 OVEREXCAVATION DETAIL - ENGINEERED FILL
SCALE: NONE

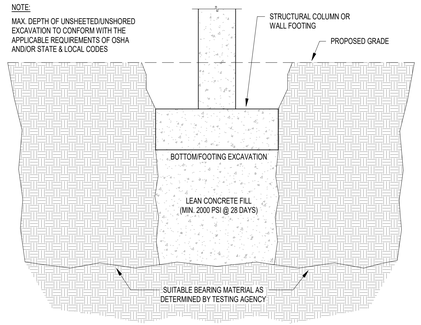

1. REFER TO THE SPECIFICATIONS FOR APPLICATION OF UNIT COSTS FOR REMOVAL OF UNSUITABLE BEARING MATERIAL & REPLACEMENT WITH LEAN CONCRETE FILL.
2. REFER TO THE GEOTECHNICAL ENGINEERING REPORT FOR ADDITIONAL INFORMATION RE: EXPECTED SOIL CONDITIONS, SUITABILITY OF EX. SOILS FOR USE AS ENGINEERED FILL, GROUNDWATER CONDITIONS, ETC.

2 S402 OVEREXCAVATION DETAIL - LEAN CONC. FILL
SCALE: NONE

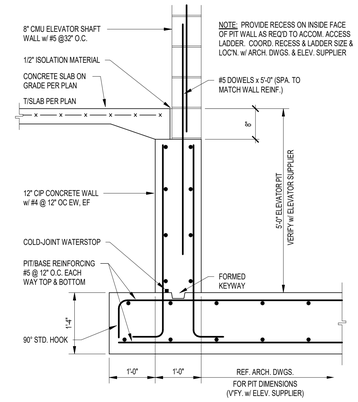

3 S402 ELEVATOR PIT DETAIL
SCALE: NONE

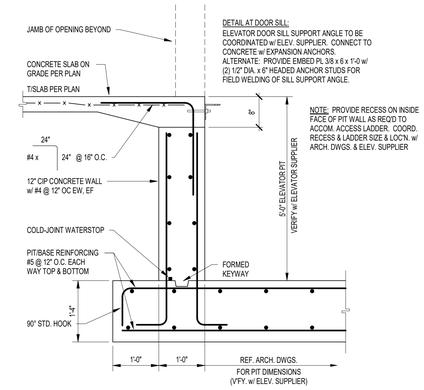

4 S402 ELEVATOR PIT DETAIL AT DOOR
SCALE: NONE

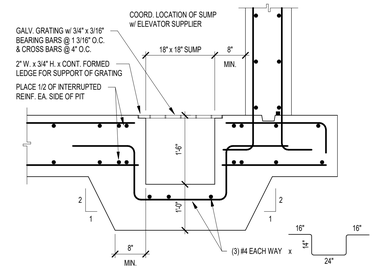

5 S402 ELEVATOR SUMP PIT DETAIL
SCALE: NONE

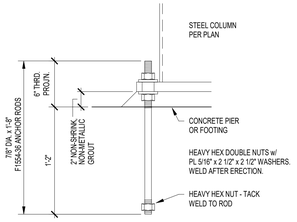

NOTES:
1. LOCATION OF ANCHOR RODS MUST NOT VARY MORE THAN 1/8" CENTER-TO-CENTER OF ANY TWO RODS WITHIN AN ANCHOR ROD GROUP.
2. HOLD MAX. DEVIATION OF 1/4", CENTER-TO-CENTER OF ADJACENT ANCHOR ROD GROUPS.
3. HOLD ELEVATION OF THE TOP OF THE ANCHOR RODS TO +/- 1/2 INCH.
4. HOLD MAXIMUM DEVIATION OF 1/4" FROM THE CENTER OF ANY ANCHOR ROD GROUP TO THE ESTABLISHED COLUMN LINE THROUGH THAT GROUP.
5. REFER TO THE AISC CODE OF STANDARD PRACTICE FOR ADDITIONAL INFORMATION.
6. TESTING AGENCY TO INSPECT TIGHTENING/TENSIONING OF ALL ANCHOR ROD NUTS IN BRACED FRAMES AND MOMENT FRAMES. WELD NUT & WASHER AFTER INSPECTION.

6 S402 7/8" DIA. ANCHOR ROD DETAIL
SCALE: NONE

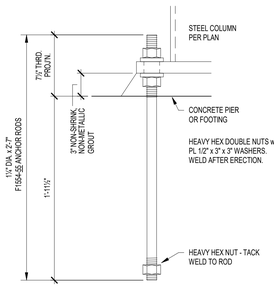

NOTES:
1. REF. DETAIL 6/S402 FOR BALANCE OF NOTES.

7 S402 1¼" DIA. ANCHOR ROD DETAIL
SCALE: NONE

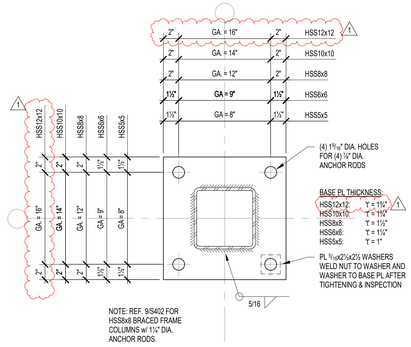

NOTE: REF. 9/S402 FOR HSS8x8 BRACED FRAME COLUMNS w/ 1½" DIA. ANCHOR RODS.

8 S402 BASE PL DETAIL - TYP HSS SQUARE
SCALE: NONE

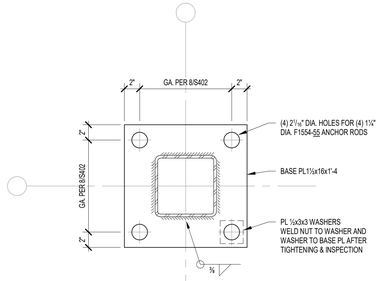

BRACED FRAME COLUMN WITHOUT GUSSET PL

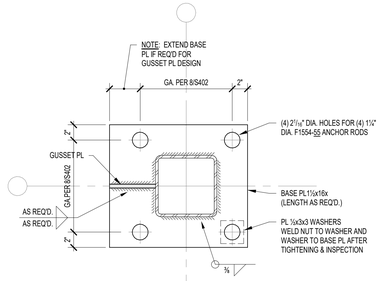

BRACED FRAME COLUMN WITH GUSSET PL

9 S402 BASE PL DETAILS - BRACED FRAME COLUMNS
SCALE: NONE

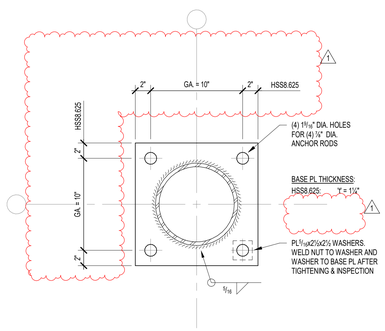

10 S402 BASE PL DETAIL - TYP HSS ROUND
SCALE: NONE

DETAIL DELETED

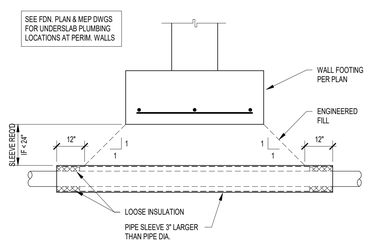

12 S402 SLEEVE UNDER WALL FOOTING
SCALE: NONE

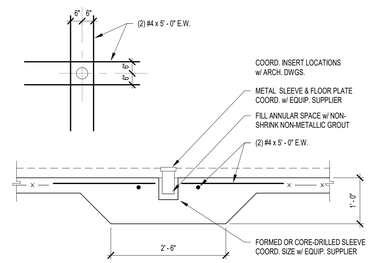

13 S402 VOLLEYBALL STANDARD INSERT DETAIL
SCALE: NONE

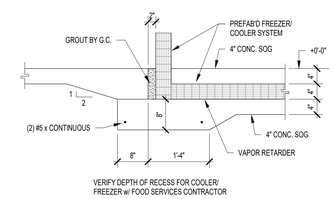

VERIFY DEPTH OF RECESS FOR COOLER/ FREEZER w/ FOOD SERVICES CONTRACTOR

14 S402 COOLER/FREEZER SLAB DETAIL
SCALE: NONE

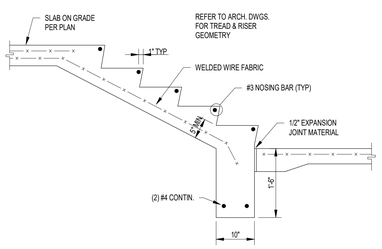

15 S402 CONCRETE STAIR ON GRADE
SCALE: NONE

BCSC TOGETHER WE LEARN

CSO
8831 Keystone Crossing, Indianapolis, IN 46240
317.848.7800 | csoinc.net
© 2018 CSO Architects, Inc. All Rights Reserved

Lynch, Harrison & Brumleve, Inc.

PROJECT:
BARTHOLOMEW CONSOLIDATED SCHOOL CORPORATION
MAPLE GROVE ELEMENTARY
TIPTON LAKES BLVD, COLUMBUS, IN 47201

SCOPE DRAWINGS:
These drawings indicate the general scope of the project in terms of architectural design concept, the dimensions of the building, the major architectural elements and the type of construction and finishes to be provided and used.
The drawings do not necessarily indicate or describe all work required for full performance and completion of the requirements of the Contract.
Provide the basic of the general scope indicated or described, the balance of work required shall remain all items required for the proper execution and completion of the work.

REVISIONS:

1	ADD #2	06/17/25

ISSUE DATE	DRAWN BY	CHECKED BY
05/16/2025	NMA/JRO/MDL	MDL

DRAWING TITLE:
TYPICAL DETAILS

CERTIFIED BY:
MARK D. LaVILER REGISTERED PE19400114 STATE OF INDIANA PROFESSIONAL ENGINEER

DRAWING NUMBER
S402

PROJECT NUMBER
2024022

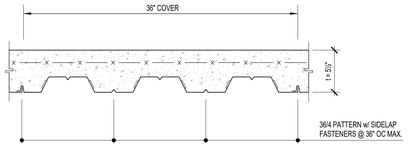

NOTE:

1. 2", 20 GA. GALVANIZED COMPOSITE STEEL FLOOR DECK w/ 3½" NORMAL WEIGHT CONCRETE SLAB w/ 6x6-W2.1xW2.1 WWF, TOTAL T = 5½".
2. WELD DECK TO SUPPORTING STRUCTURE USING 3/4" DIAMETER WELDS. MECHANICAL FASTENERS MAY BE USED IN LIEU OF WELDS; SUBMIT PROPOSED FASTENERS & TECHNICAL DATA FOR REVIEW. COMPOSITE SHEAR CONNECTORS MAY TAKE THE PLACE OF WELDS AT COMPOSITE BEAMS.
3. BUTT ENDS OF DECK OVER SUPPORT.
4. USE #10 TEK SCREW SIDELAP FASTENERS, U.N.O.
5. REFER TO SPECIFICATIONS FOR ADDITIONAL INFORMATION.
6. REF. SLAB TYPE (F1) ON THE FRAMING PLANS.
7. MAXIMUM UNSHORED CLEAR SPANS SHALL NOT EXCEED THE FOLLOWING:

SINGLE SPAN:	7'-6"
DOUBLE SPAN:	8'-2"
TRIPLE SPAN:	8'-5"

SPANS SHOWN ARE BASED ON NEW MILLENNIUM 2" 2.0CD 20 GA. DECK. THE CONTRACTOR MUST CONFIRM THAT ALTERNATE DECK PRODUCTS MEET OR EXCEED THE SPANS SHOWN. CONTRACTOR SHALL SHORE ALL SPANS EXCEEDING THE LIMITS ABOVE UNTIL CONCRETE HAS ACHIEVED ITS SPECIFIED 28-DAY COMPRESSIVE STRENGTH.

1 S404 2" COMPOSITE STEEL DECK/SLAB (5½")

SCALE: NONE

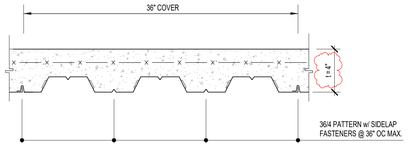

NOTE:

1. 2", 20 GA. GALVANIZED COMPOSITE STEEL FLOOR DECK w/ 2" NORMAL WEIGHT CONCRETE SLAB w/ 6x6-W1.4xW1.4 WWF, TOTAL T = 4".
2. WELD DECK TO SUPPORTING STRUCTURE USING 3/4" DIAMETER WELDS. MECHANICAL FASTENERS MAY BE USED IN LIEU OF WELDS; SUBMIT PROPOSED FASTENERS & TECHNICAL DATA FOR REVIEW. COMPOSITE SHEAR CONNECTORS MAY TAKE THE PLACE OF WELDS AT COMPOSITE BEAMS.
3. BUTT ENDS OF DECK OVER SUPPORT.
4. USE #10 TEK SCREW SIDELAP FASTENERS, U.N.O.
5. REFER TO SPECIFICATIONS FOR ADDITIONAL INFORMATION.
6. REF. SLAB TYPE (F2) ON THE FRAMING PLANS.
7. MAXIMUM UNSHORED CLEAR SPANS SHALL NOT EXCEED THE FOLLOWING:

SINGLE SPAN:	9'-5"
DOUBLE SPAN:	10'-5" 1
TRIPLE SPAN:	10'-9"

SPANS SHOWN ARE BASED ON NEW MILLENNIUM 2" 2.0CD 20 GA. DECK. THE CONTRACTOR MUST CONFIRM THAT ALTERNATE DECK PRODUCTS MEET OR EXCEED THE SPANS SHOWN. CONTRACTOR SHALL SHORE ALL SPANS EXCEEDING THE LIMITS ABOVE UNTIL CONCRETE HAS ACHIEVED ITS SPECIFIED 28-DAY COMPRESSIVE STRENGTH.

2 S404 2" COMPOSITE STEEL DECK/SLAB (4")

SCALE: NONE

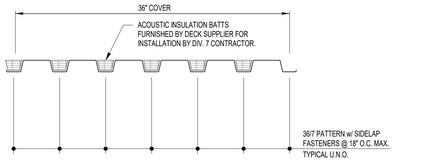

NOTE:

1. 1½", 20 GA. PRIME-PAINTED WIDE RIB STEEL ROOF DECK.
2. ALL WELDS SHALL BE 5/8" DIA. PUDDLE WELDS.
3. USE #10 TEK SCREW SIDELAP FASTENERS, U.N.O.
4. MECHANICAL FASTENERS MAY BE USED IN LIEU OF WELDS.
   USE THE FOLLOWING HILTI POWDER ACTUATED FASTENERS:
   USE X-HSN 24 FOR OPEN-WEB STEEL JOISTS & STRUCTURAL STEEL 1/8" ≤ T ≤ 3/8"
   USE X-ENP-19 L15 FOR STRUCTURAL STEEL & HEAVY OPEN-WEB JOISTS T ≥ 1/4"
   ACCEPTABLE ALTERNATE: PNEUTEK AIR/SAFE FASTENING SYSTEM. SUBMIT PROPOSED FASTENERS & TECHNICAL DATA FOR REVIEW.
5. PROVIDE MANUFACTURER'S STANDARD INERT, NON-ORGANIC FIBER SOUND-ABSORBING BATTS PLACED IN RIB OPENINGS. NRC = 0.65.
6. REF. DECK TYPE (R2) ON THE FRAMING PLANS.
7. REFER TO SPECIFICATIONS FOR ADDITIONAL INFORMATION.

3 S404 1½" WIDE RIB ACOUST. STEEL ROOF DECK

SCALE: 3/4" = 1'-0"

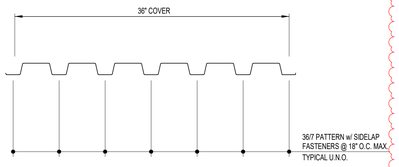

NOTE:

1. 1½", 20 GA. GALVANIZED & PRIME-PAINTED WIDE RIB STEEL ROOF DECK.
2. MECHANICAL FASTENERS SHALL BE USED IN LIEU OF WELDS.
   USE THE FOLLOWING HILTI POWDER ACTUATED FASTENERS:
   USE X-HSN 24 FOR OPEN-WEB STEEL JOISTS & STRUCTURAL STEEL 1/8" ≤ T ≤ 3/8"
   USE X-ENP-19 L15 FOR STRUCTURAL STEEL & HEAVY OPEN-WEB JOISTS T ≥ 1/4"
   ACCEPTABLE ALTERNATE: PNEUTEK AIR/SAFE FASTENING SYSTEM. SUBMIT PROPOSED FASTENERS & TECHNICAL DATA FOR REVIEW.
3. USE #10 TEK SCREW SIDELAP FASTENERS, U.N.O.
4. REF. DECK TYPE (R1) ON THE FRAMING PLANS.
5. REFER TO SPECIFICATIONS FOR ADDITIONAL INFORMATION.

4 S404 1½" WIDE RIB STEEL ROOF DECK

SCALE: NONE

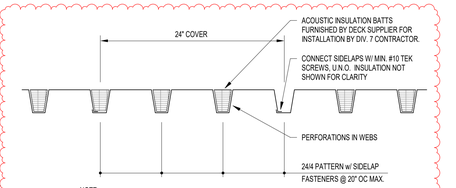

NOTE:

1. 3", 20 GA. PRIME-PAINTED DEEP RIB ACOUSTICAL STEEL ROOF DECK.
2. MECHANICAL FASTENERS SHALL BE USED IN LIEU OF WELDS.
   USE THE FOLLOWING HILTI POWDER ACTUATED FASTENERS:
   USE X-HSN 24 FOR OPEN-WEB STEEL JOISTS & STRUCTURAL STEEL 1/8" ≤ T ≤ 3/8"
   USE X-ENP-19 L15 FOR STRUCTURAL STEEL & HEAVY OPEN-WEB JOISTS T ≥ 1/4"
   ACCEPTABLE ALTERNATE: PNEUTEK AIR/SAFE FASTENING SYSTEM. SUBMIT PROPOSED FASTENERS & TECHNICAL DATA FOR REVIEW.
3. USE #10 TEK SCREW SIDELAP FASTENERS, U.N.O.
4. PROVIDE MANUFACTURER'S STANDARD INERT, NON-ORGANIC FIBER SOUND-ABSORBING BATTS PLACED IN RIB OPENINGS. NRC = 0.70.
5. REF. DECK TYPE (R3) ON THE FRAMING PLANS.
6. REFER TO SPECIFICATIONS FOR ADDITIONAL INFORMATION.

5 S404 3" DEEP RIB ACOUST. STEEL ROOF DECK

SCALE: 3/4" = 1'-0"

NOTE: ASSUME THAT ALL BENT PLATE SLAB EDGES SHALL BE FIELD WELDED AFTER ADJUSTMENT TO MAINTAIN TOLERANCES AND REQ'D. CLEARANCES. SLAB CLOSURES FOR SHORT MEMBERS, OR FOR SLAB EDGES WHERE TOLERANCES ARE NOT CRITICAL MAY BE SHOP-WELDED PENDING APPROVAL OF THE ENGINEER. THE FABRICATOR & ERECTOR SHALL COORDINATE ALL FIELD WELDING VS. SHOP WELDING AT THE TIME OF BIDDING. LACK OF FIELD WELD SYMBOLS ON SPECIFIC SECTIONS DOES NOT RELIEVE THE FABRICATOR/ ERECTOR FROM THE RESPONSIBILITY TO MAINTAIN TOLERANCES.

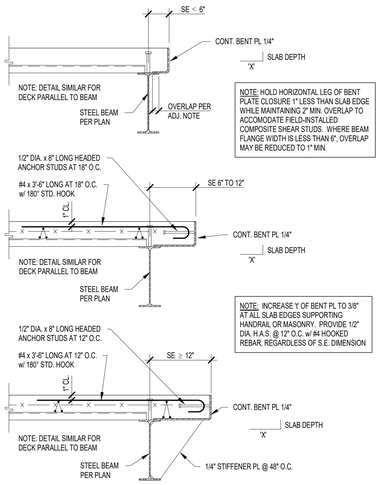

NOTE: HOLD HORIZONTAL LEG OF BENT PLATE CLOSURE 1" LESS THAN SLAB EDGE WHILE MAINTAINING 2" MIN. OVERLAP TO ACCOMODATE FIELD-INSTALLED COMPOSITE SHEAR STUDS. WHERE BEAM FLANGE WIDTH IS LESS THAN 6", OVERLAP MAY BE REDUCED TO 1" MIN.

NOTE: INCREASE Y OF BENT PL TO 3/8" AT ALL SLAB EDGES SUPPORTING HANDRAIL OR MASONRY. PROVIDE 1/2" DIA. H.A.S. @ 12" O.C. w/ #4 HOOKED REBAR, REGARDLESS OF S.E. DIMENSION

6 S404 TYPICAL SLAB EDGE DETAILS

SCALE: NONE

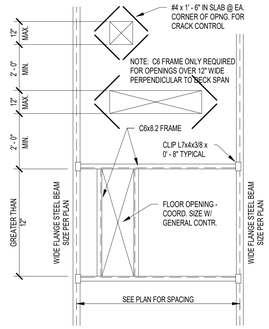

PLAN

NOTE: IF THE OPENING IS POST-INSTALLED AFTER THE SLAB IS POURED, THE CLIP ANGLES MAY BE OMITTED AND THE CHANNELS MAY BE CONNECTED DIRECTLY TO THE BEAM WEB.

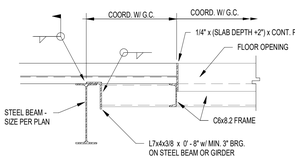

SECTION

7 S404 SLAB ON DECK OPENING FRAME DETAIL

SCALE: NONE

NOTES:

1. PROVIDE ANGLE FRAME AS SHOWN FOR ALL ROOF OPENINGS IN 1 1/2" WIDE-RIB DECK WITH MAXIMUM DIMENSION EXCEEDING 1' - 0".
2. USE: L4x4x1/4 TYPICAL.
3. COORDINATE LOCATION OF ROOF OPENINGS WITH MECHANICAL AND ARCHITECTURAL DRAWINGS.
4. AT ROOF ACCESS HATCH, PROVIDE CHANNEL FRAME INSTEAD OF ANGLE FRAME (REF. ADJ. DETAIL).

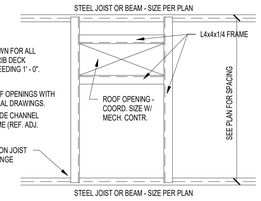

PLAN

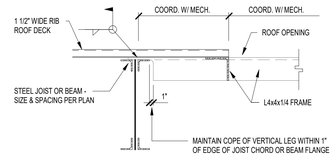

SECTION

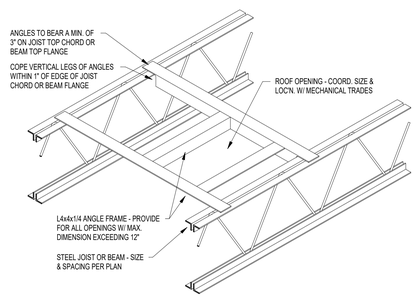

ISOMETRIC

8 S404 ROOF OPENING FRAME DETAIL - 1½" DECK

SCALE: NONE

NOTES:

1. PROVIDE CHANNEL FRAME AS SHOWN FOR ALL ROOF OPENINGS IN 3" ROOF DECK WITH MAX. DIMENSION EXCEEDING 1' - 6".
2. USE: C6x8.2 W/ CLIP L7x4x3/8 TYPICAL.
3. COORDINATE LOCATION OF ROOF OPENINGS WITH MECHANICAL AND ARCHITECTURAL DRAWINGS.
4. ALSO PROVIDE CHANNEL FRAME AT ANY ROOF ACCESS HATCHES IN 1½" ROOF DECK.

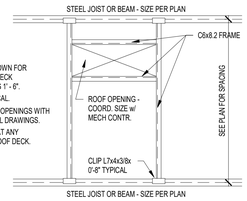

PLAN

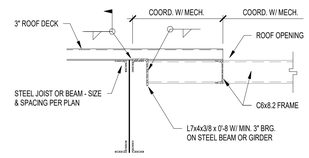

SECTION

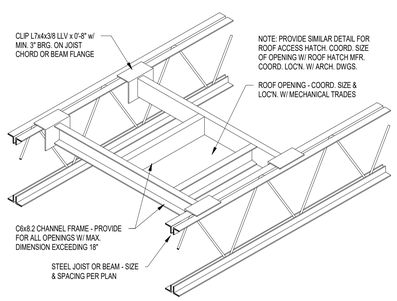

ISOMETRIC

9 S404 ROOF OPENING FRAME DETAIL - 2" & 3" DECK

SCALE: NONE

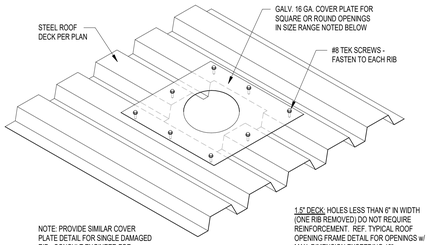

1.5" DECK: HOLES LESS THAN 8" IN WIDTH (ONE RIB REMOVED) DO NOT REQUIRE REINFORCEMENT. REF. TYPICAL ROOF OPENING FRAME DETAIL FOR OPENINGS w/ MAX. DIMENSION EXCEEDING 12"

3" DECK: HOLES LESS THAN 8" IN WIDTH (ONE RIB REMOVED) DO NOT REQUIRE REINFORCEMENT. REF. TYPICAL ROOF OPENING FRAME DETAIL FOR OPENINGS w/ MAX. DIMENSION EXCEEDING 18"

10 S404 SMALL ROOF OPENING DETAIL

SCALE: NONE

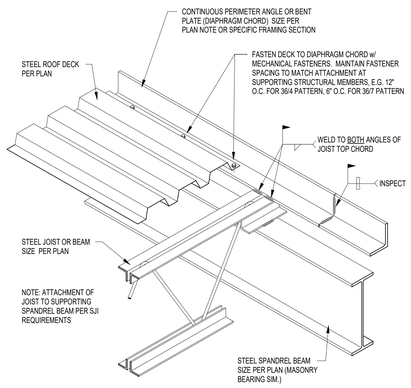

11 S404 DIAPHRAGM CHORD DETAIL

SCALE: NONE

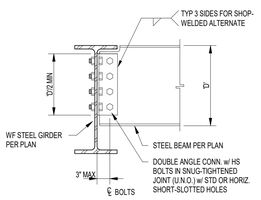

NOTE: DESIGN CONNECTION TO DEVELOP BEAM REACTION PER S001 "STEEL CONNECTION NOTES"

12 S404 TYP. FRAMED BEAM CONNECTION

SCALE: NONE

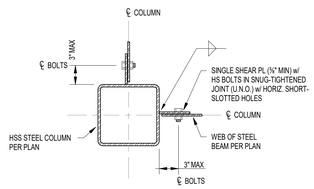

NOTES:

1. DESIGN CONNECTION TO DEVELOP BEAM REACTION PER S001 "STEEL CONNECTION NOTES".
2. PROVIDE SHEAR PL AT LEAST ONE HALF THE DEPTH OF THE FRAMED BEAM.

14 S404 TYP. FRAMED BEAM TO HSS COL. CONNECTION - HSS FACE < 8"

SCALE: NONE

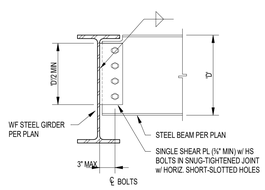

NOTE: DESIGN CONNECTION TO DEVELOP BEAM REACTION PER S001 "STEEL CONNECTION NOTES"

13 S404 ALT. FRAMED BEAM CONNECTION

SCALE: NONE

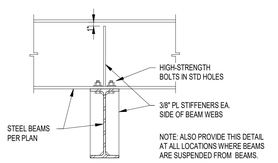

NOTE: ALSO PROVIDE THIS DETAIL AT ALL LOCATIONS WHERE BEAMS ARE SUSPENDED FROM BEAMS.

15 S404 BEAM BRG. ON BEAM DETAIL

SCALE: NONE

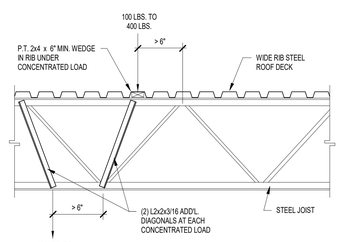

1. LOADS LESS THAN 100 LBS. MAY BE LOCATED ANYWHERE ALONG THE TOP OR BOTTOM CHORD OF THE JOIST WITHOUT REQUIRING REINFORCEMENT.
2. PROVIDE THIS DETAIL WHERE SUSPENDED EQUIPMENT, MECHANICAL UNIT, OR PIPING IMPARTS A CONCENTRATED LOAD OF BETWEEN 100 AND 400 LBS. IF THE LOAD IS APPLIED WITHIN 6" OF A TOP OR BOTTOM CHORD PANEL POINT, NO REINFORCEMENT IS REQUIRED.
3. NO CONCENTRATED LOADS GREATER THAN 400 LBS WILL BE ALLOWED WITHOUT THE WRITTEN APPROVAL OF THE ARCHITECT/ENGINEER.
4. FOR DEEP-RIB DECK, PROVIDE DOUBLE 2x BLOCKING UNDER CONCENTRATED LOAD.
5. FOR DLH JOISTS, INCREASE SIZE OF ADDITIONAL REINFORCING DIAGONALS TO L2½x2½x¼.

16 S404 JOIST CONCENTRATED LOAD DETAIL

SCALE: NONE

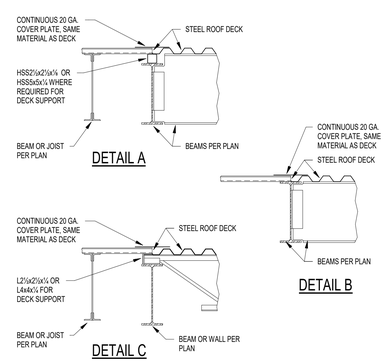

17 S404 CHANGE OF ROOF DECK DIRECTION

SCALE: NONE

CHANNEL SIZE	
3" DEEP-RIB DECK	(2) MC8x22.8 (STITCH-WELD TOGETHER)
2" DOVETAIL DECK	C12x20.7
1.5" WIDE-RIB DECK	C12x20.7

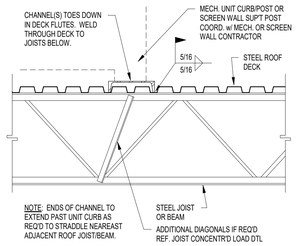

18 S404 RTU CURB & SCREEN WALL POST SUPPORT DETAIL

SCALE: NONE

BCSC TOGETHER WE LEARN

CSO
8831 Keystone Crossing, Indianapolis, IN 46240
317.848.7600 | csoinc.net
© 2018 CSO Architects, Inc. All Rights Reserved

Lynch, Harrison & Brumleve, Inc.

PROJECT:
BARTHOLOMEW CONSOLIDATED SCHOOL CORPORATION
MAPLE GROVE ELEMENTARY
TIPTON LAKES BLVD, COLUMBUS, IN 47201

SCOPE DRAWINGS:
These drawings indicate the general scope of the project in terms of architectural design concept, the dimensions of the building, the major architectural elements and the type of structural, mechanical and electrical systems. The contractors shall furnish all items required to describe all work required for full performance and completion of the requirements of the Contract.
On the basis of the general scope indicated or described, the trade contractors shall furnish all items required for the proper execution and completion of the work.

REVISIONS:

1	ADD #2	06/17/25

ISSUE DATE	DRAWN BY	CHECKED BY
05/16/2025	NMA/JRO/MDL	MDL

DRAWING TITLE:
TYPICAL DETAILS

CERTIFIED BY:
MARK D. LAVIER REGISTERED PE19400114 STATE OF INDIANA

DRAWING NUMBER
S404

PROJECT NUMBER
2024022

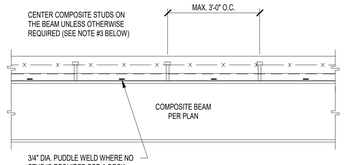

1. THE MIN. NUMBER OF STUDS FOR EACH BEAM IS SHOWN ON THE FRAMING PLAN.
2. SPACE STUDS AS EVENLY AS POSSIBLE IN AVAILABLE DECK FLUTES. WHERE STUD SPACING EXCEEDS THE MAX. SPACING ALLOWED, PROVIDE ADDITIONAL STUDS TO SATISFY THE SPACING REQUIREMENTS.
3. WHERE THE NUMBER OF STUDS EXCEEDS THE NUMBER OF FLUTES, PROVIDE TWO STUDS IN EVERY OTHER FLUTE, STARTING AT EACH END OF THE BEAM. THE TRANSVERSE SPACING BETWEEN TWO STUDS IN A SINGLE FLUTE SHALL BE 3", UNLESS NOTED OTHERWISE.
4. PLACE ANY NATURAL BEAM CAMBER UP.

1 S405 COMPOSITE GIRDER CONSTRUCTION
SCALE: NONE

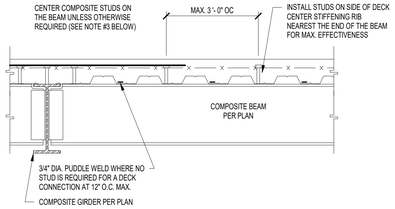

1. THE MIN. NUMBER OF STUDS FOR EACH BEAM IS SHOWN ON THE FRAMING PLAN.
2. SPACE STUDS AS EVENLY AS POSSIBLE IN AVAILABLE DECK FLUTES. WHERE STUD SPACING EXCEEDS THE MAX. SPACING ALLOWED, PROVIDE ADDITIONAL STUDS TO SATISFY THE SPACING REQUIREMENTS.
3. WHERE THE NUMBER OF STUDS EXCEEDS THE NUMBER OF FLUTES, PROVIDE TWO STUDS IN EVERY OTHER FLUTE, STARTING AT EACH END OF THE BEAM. THE TRANSVERSE SPACING BETWEEN TWO STUDS IN A SINGLE FLUTE SHALL BE 3", UNLESS NOTED OTHERWISE.
4. PLACE ANY NATURAL BEAM CAMBER UP.

2 S405 COMPOSITE PURLIN CONSTRUCTION
SCALE: NONE

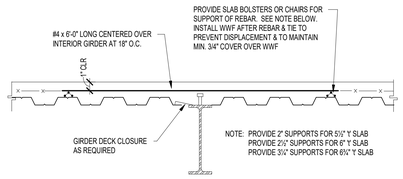

3 S405 INTERIOR COMPOSITE GIRDER DETAIL
SCALE: NONE

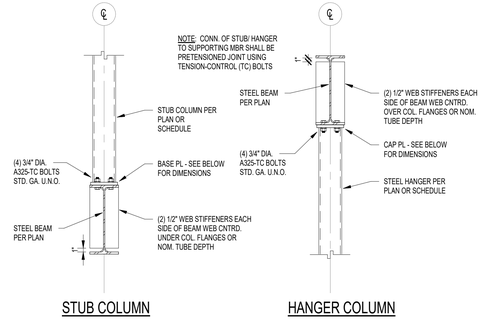

STUB COLUMN — HANGER COLUMN

NOTES:
1. CAP/BASE PL 't' ≥ LARGER OF COL. OR BEAM FLANGE/WALL THICKNESS, WITH MIN. 't' = 1".
2. MIN. CAP PL LENGTH = COL. DEPTH + 6" UNLESS LONGER PL REQ'D FOR BEARING/CRIPPLING OR BOLT CLEARANCES.
3. MIN. CAP PL WIDTH = COL. WIDTH + 1" OR AS REQ'D FOR BOLT GA. + 3"
4. WHERE COLUMN DEPTH IS LESS THAN 8", REPLACE STIFFENER PLATES SHOWN WITH (1) STIFF. PL EA SIDE CENTERED ON COLUMN. PLATE MAY DOUBLE AS SHEAR PL WHERE SUPPORT OF A PERPENDICULAR BEAM IS REQUIRED.

4 S405 STUB/HANGER COLUMN DETAILS
SCALE: NONE

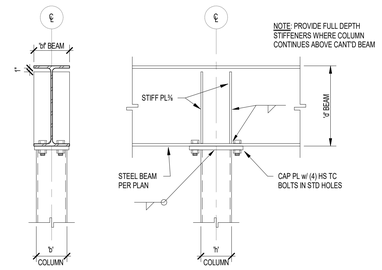

NOTES:
1. CAP PL 't' ≥ LARGER OF COL. OR BEAM FLANGE/WALL THICKNESS, WITH MIN. 't' = 1".
2. MIN. CAP PL LENGTH = COL. DEPTH + 6" UNLESS LONGER PL REQ'D FOR BEARING/CRIPPLING OR BOLT CLEARANCES.
3. MIN. CAP PL WIDTH = COL. WIDTH + 1" OR AS REQ'D FOR BOLT GA. + 3"
4. WHERE COLUMN DEPTH IS LESS THAN 8", REPLACE STIFFENER PLATES SHOWN WITH (1) STIFF. PL EA SIDE CENTERED ON COLUMN. PLATE MAY DOUBLE AS SHEAR PL WHERE SUPPORT OF A PERPENDICULAR BEAM IS REQUIRED.
5. WHERE COLUMN CONTINUES ABOVE BEAM, BASE PL ABOVE TO BE SIM. TO CAP PL BELOW.

5 S405 CONTIN. BEAM OVER TOP OF COLUMN
SCALE: NONE

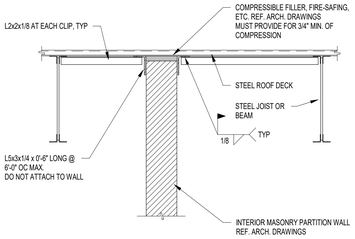

WALL EXTENDED TO BOTTOM OF STRUCTURE
WALL PARALLEL TO PURLINS

NOTE: PROVIDE ONE OF THESE DETAILS WHERE DISTANCE BTWN. INTERSECTING WALL, PILASTER, OR CORNER EXCEEDS 30 x THE NOMINAL WALL THICKNESS. COORDINATE w/ ARCH. FLOOR PLANS.

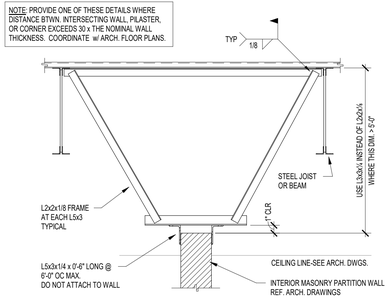

WALL EXTENDED TO ABOVE CEILING
WALL PARALLEL TO PURLINS

6 S405 CMU PARTITION BRACING DETAILS - PARALLEL TO PURLINS
SCALE: NONE

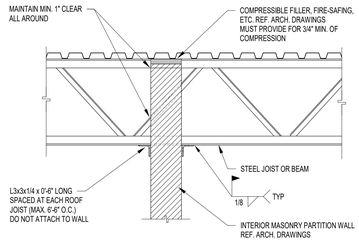

WALL EXTENDED TO BOTTOM OF STRUCTURE
WALL PERPENDICULAR TO PURLINS

NOTE: PROVIDE ONE OF THESE DETAILS WHERE DISTANCE BTWN. INTERSECTING WALL, PILASTER, OR CORNER EXCEEDS 30 x THE NOMINAL WALL THICKNESS. COORDINATE w/ ARCH. FLOOR PLANS.

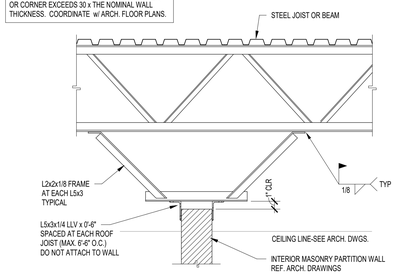

WALL EXTENDED TO ABOVE CEILING
WALL PERPENDICULAR TO PURLINS

7 S405 CMU PARTITION BRACING DETAILS - PERPENDICULAR TO PURLINS
SCALE: NONE

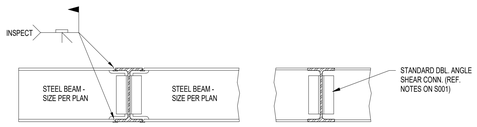

DETAIL A - BEAMS NOMINALLY SAME DEPTH

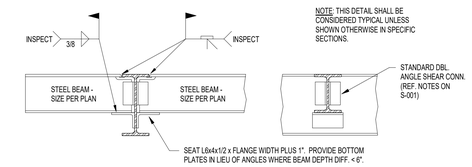

DETAIL B - BEAMS OF DIFFERENT DEPTH

8 S405 BEAM-TO-BEAM MOMENT CONNECTIONS
SCALE: NONE

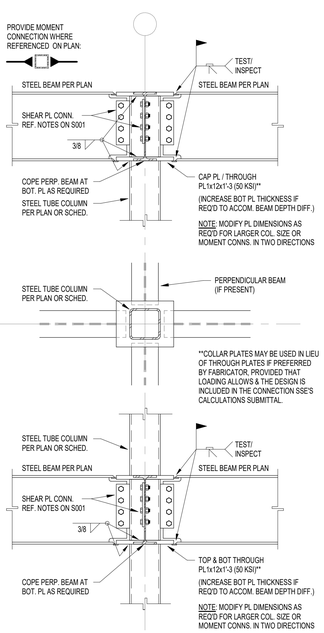

9 S405 BEAM TO HSS COL. MOMENT CONNECTIONS
SCALE: NONE

DETAIL DELETED

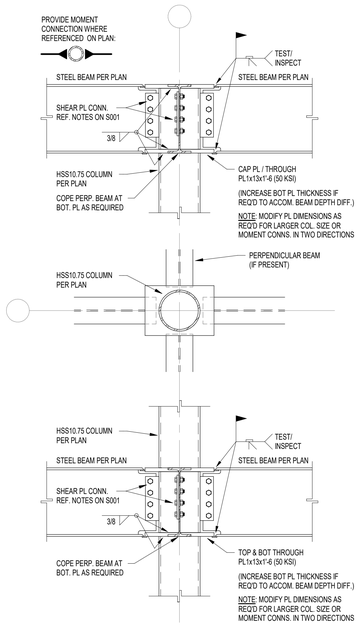

11 S405 BEAM TO HSS ROUND COL. MOMENT CONN.
SCALE: NONE

DETAIL DELETED

BCSC TOGETHER WE LEARN

CSO
8831 Keystone Crossing, Indianapolis, IN 46240
317.848.7600 | csoinc.net
© 2019 CSO Architects, Inc. All Rights Reserved

Lynch, Harrison & Brumleve, Inc.

PROJECT:
BARTHOLOMEW CONSOLIDATED SCHOOL CORPORATION
MAPLE GROVE ELEMENTARY
TIPTON LAKES BLVD, COLUMBUS, IN 47201

SCOPE DRAWINGS:
These drawings indicate the general scope of the project in terms of architectural design concept, the dimensions of the building, the major architectural elements and the type and quality of materials and finishes to be provided.
The drawings do not necessarily indicate or describe all work required for full performance and completion of the construction of the project.
On the basis of the general scope indicated or described, the trade contractors shall furnish all items required for the proper execution and completion of the work.

REVISIONS:

1	ADD #2	06/17/25

ISSUE DATE	DRAWN BY	CHECKED BY
05/16/2025	NMA/JRO/MDL	MDL

DRAWING TITLE:
TYPICAL DETAILS

CERTIFIED BY:
MARK D. LAVIER REGISTERED PE19400114 STATE OF INDIANA PROFESSIONAL ENGINEER

DRAWING NUMBER
S405

PROJECT NUMBER
2024022

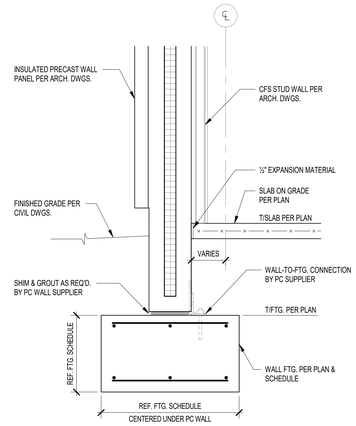

1 S701 TYP. FNDN SECTION @ PRECAST
SCALE: 3/4" = 1'-0"

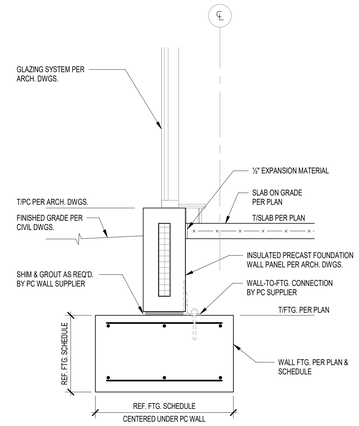

2 S701 TYP. FNDN SECTION @ GLAZING
SCALE: 3/4" = 1'-0"

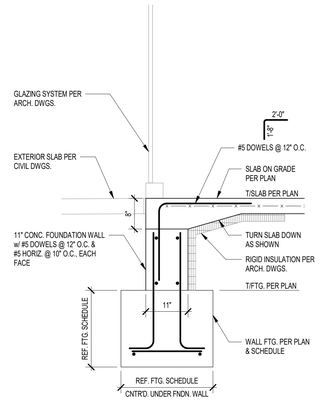

3 S701 SECTION
SCALE: 3/4" = 1'-0"

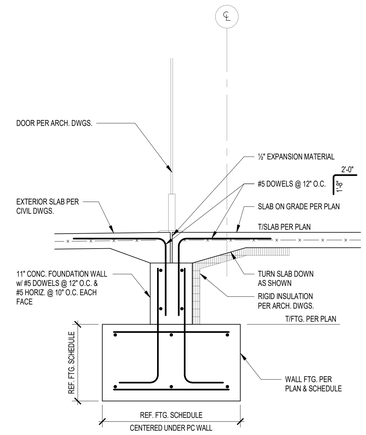

4 S701 SECTION
SCALE: 3/4" = 1'-0"

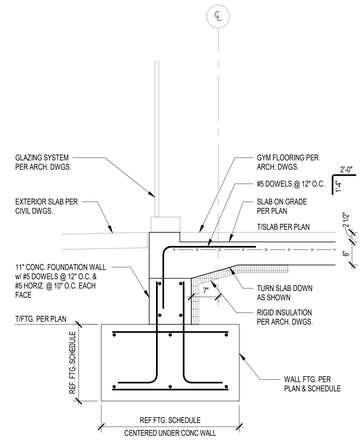

5 S701 SECTION
SCALE: 3/4" = 1'-0"

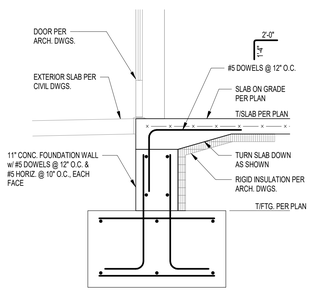

6 S701 SECTION
SCALE: 3/4" = 1'-0"

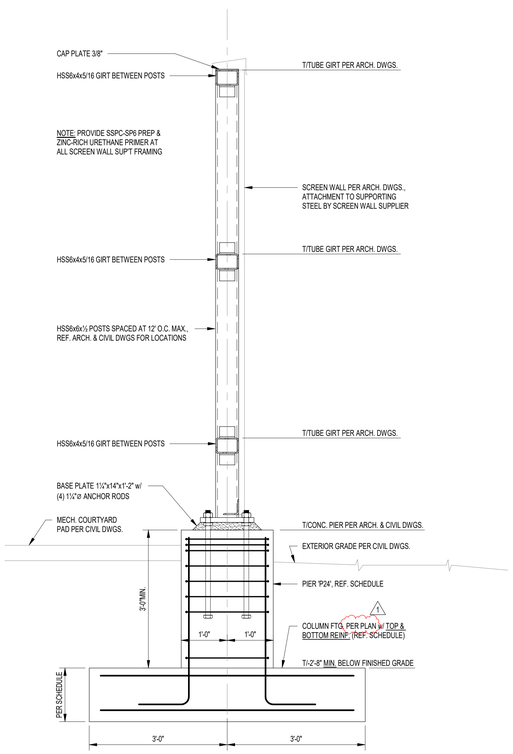

7 S701 MECH. YARD SCREEL WALL FTG.
SCALE: 3/4" = 1'-0"

BCSC TOGETHER WE LEARN

CSO
8831 Keystone Crossing, Indianapolis, IN 46240
317.848.7800 | csoinc.net
© 2018 CSO Architects, Inc. All Rights Reserved

Lynch, Harrison & Brumleve, Inc.

PROJECT:
BARTHOLOMEW CONSOLIDATED SCHOOL CORPORATION
MAPLE GROVE ELEMENTARY
TIPTON LAKES BLVD, COLUMBUS, IN 47201

SCOPE DRAWINGS:
These drawings indicate the general scope of the project in terms of architectural design concept, the dimensions of the building, the major architectural elements and the type of construction and mechanical systems required.
The drawings do not necessarily indicate or describe all work required for full performance and completion of the requirements of the Contract.
On the basis of the general scope indicated or described, the bidders are required to provide all items required for the proper execution and completion of the work.

REVISIONS:

1	ADD #2	06/17/25

ISSUE DATE	DRAWN BY	CHECKED BY
05/30/2025	NMA/JRO/MDL	MDL

DRAWING TITLE:
SECTIONS AND DETAILS

CERTIFIED BY:
MARK D. LaVILER REGISTERED PE19400114 STATE OF INDIANA PROFESSIONAL ENGINEER

DRAWING NUMBER
S701

PROJECT NUMBER
2024022

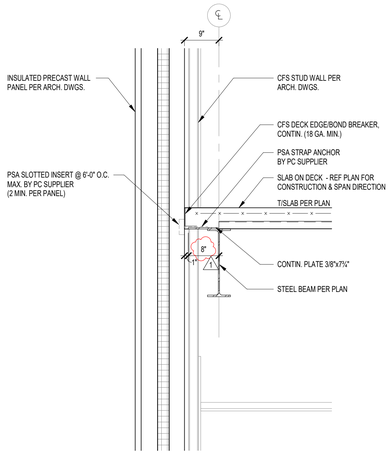

1 S702 TYP. 2nd FLOOR @ PRECAST
SCALE: 3/4" = 1'-0"

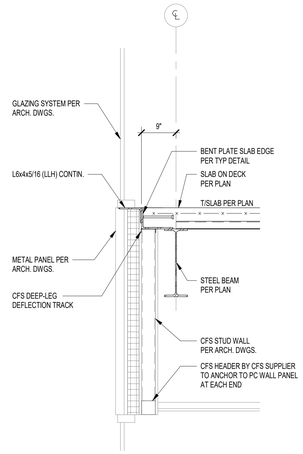

2 S702 TYP 2nd FLOOR @ GLAZING
SCALE: 3/4" = 1'-0"

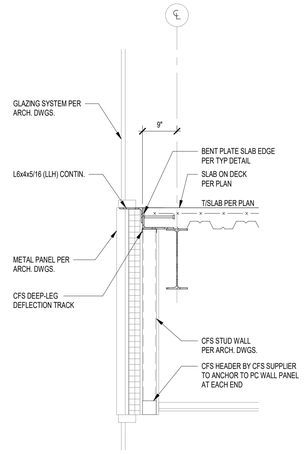

3 S702 SECTION
SCALE: 3/4" = 1'-0"

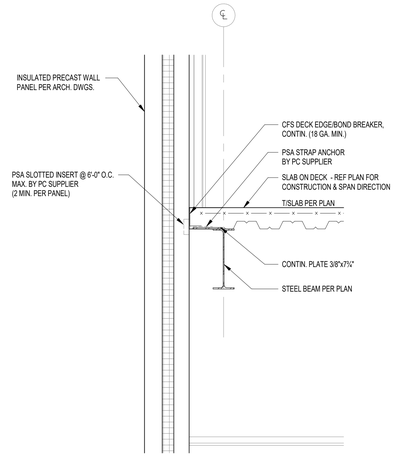

4 S702 SECTION
SCALE: 3/4" = 1'-0"

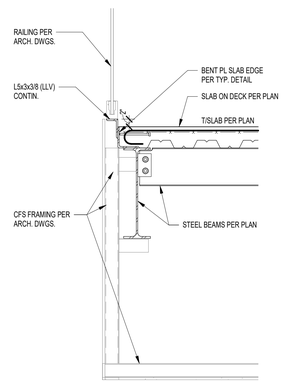

5 S702 SECTION
SCALE: 3/4" = 1'-0"

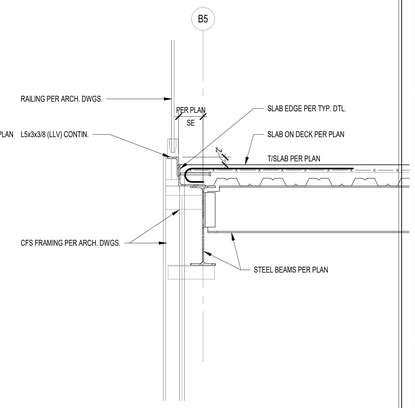

6 S702 SECTION
SCALE: 3/4" = 1'-0"

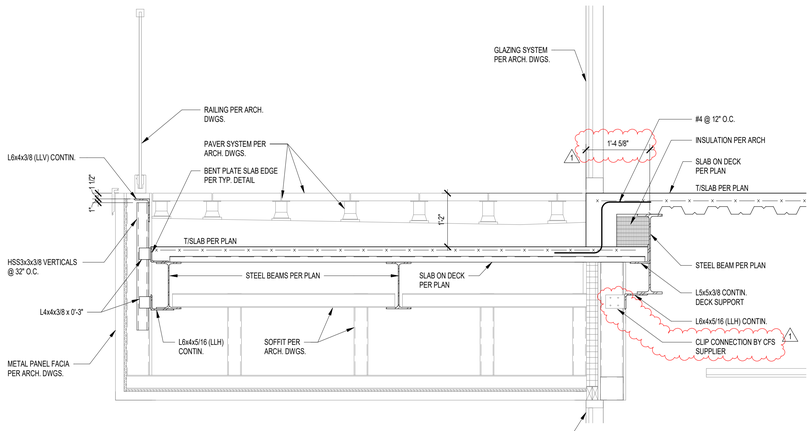

7 S702 SECTION
SCALE: 3/4" = 1'-0"

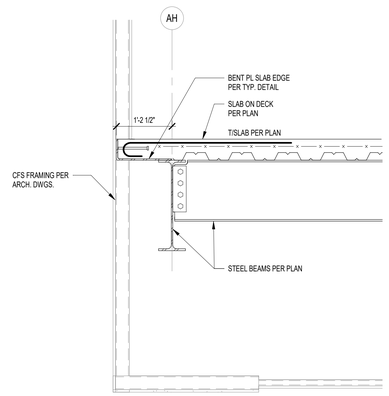

8 S702 SECTION
SCALE: 3/4" = 1'-0"

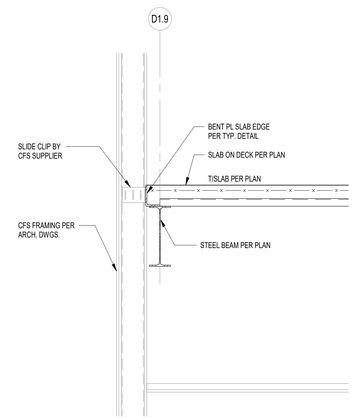

9 S702 SECTION
SCALE: 3/4" = 1'-0"

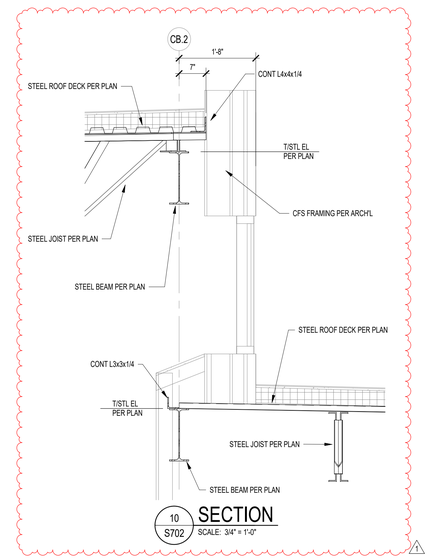

10 S702 SECTION
SCALE: 3/4" = 1'-0"

BCSC TOGETHER WE LEARN

CSO
8831 Keystone Crossing, Indianapolis, IN 46240
317.848.7800 | csoinc.net
© 2018 CSO Architects, Inc. All Rights Reserved

Lynch, Harrison & Brumleve, Inc.

PROJECT:
BARTHOLOMEW CONSOLIDATED SCHOOL CORPORATION
MAPLE GROVE ELEMENTARY
TIPTON LAKES BLVD, COLUMBUS, IN 47201

SCOPE DRAWINGS:
These drawings indicate the general scope of the project in terms of architectural design concept, the dimensions of the building, the major architectural elements and the type of construction and finish materials to be used.
The drawings do not necessarily indicate or describe all work required for full performance and completion of the requirements of the Contract.
On the basis of the general scope indicated or described, the trades shall provide all finish all items required for the proper execution and completion of the work.

REVISIONS:

1	ADD #2	06/17/25

ISSUE DATE	DRAWN BY	CHECKED BY
05/30/2025	NMA/JRO/MDL	MDL

DRAWING TITLE:
SECTIONS AND DETAILS

CERTIFIED BY:
MARK D. LaVIER
REGISTERED
PE19400114
STATE OF INDIANA
PROFESSIONAL ENGINEER

DRAWING NUMBER
S702

PROJECT NUMBER
2024022

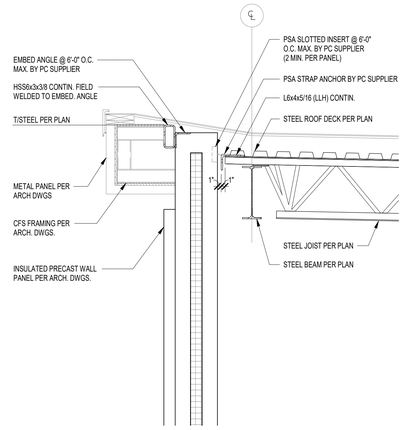

1 S703 SECTION
SCALE: 3/4" = 1'-0"

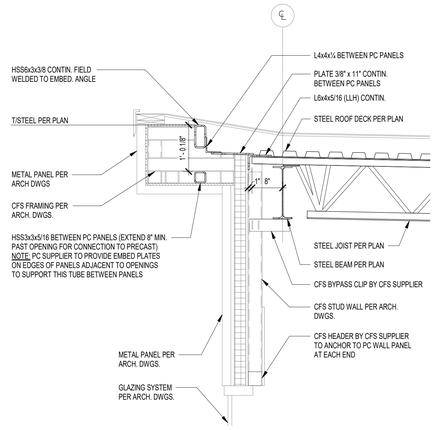

2 S703 SECTION
SCALE: 3/4" = 1'-0"

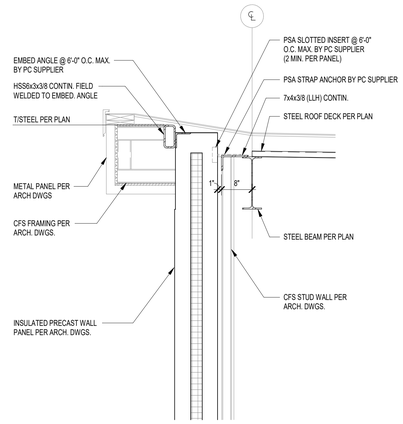

3 S703 SECTION
SCALE: 3/4" = 1'-0"

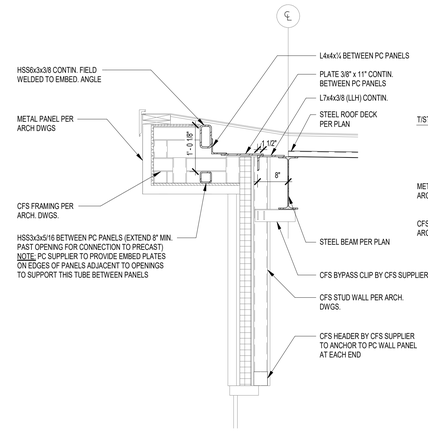

4 S703 SECTION
SCALE: 3/4" = 1'-0"

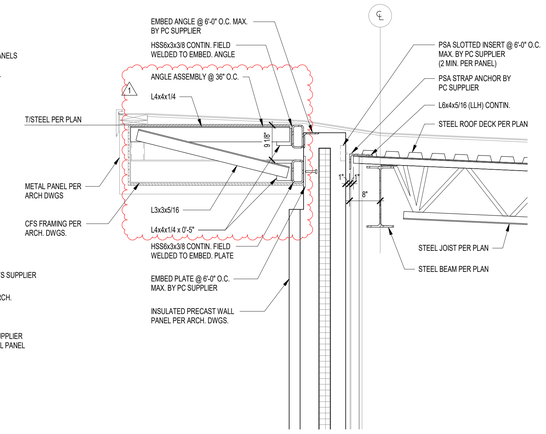

5 S703 SECTION
SCALE: 3/4" = 1'-0"

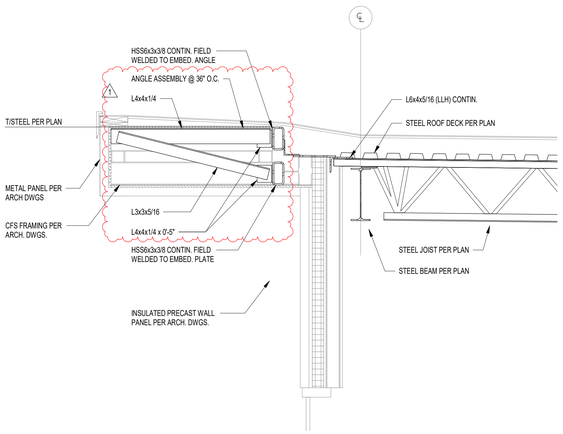

6 S703 SECTION
SCALE: 3/4" = 1'-0"

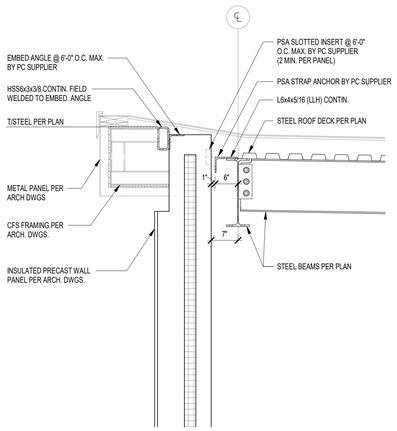

7 S703 SECTION
SCALE: 3/4" = 1'-0"

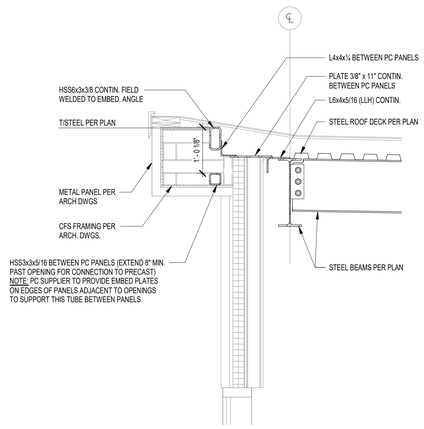

8 S703 SECTION
SCALE: 3/4" = 1'-0"

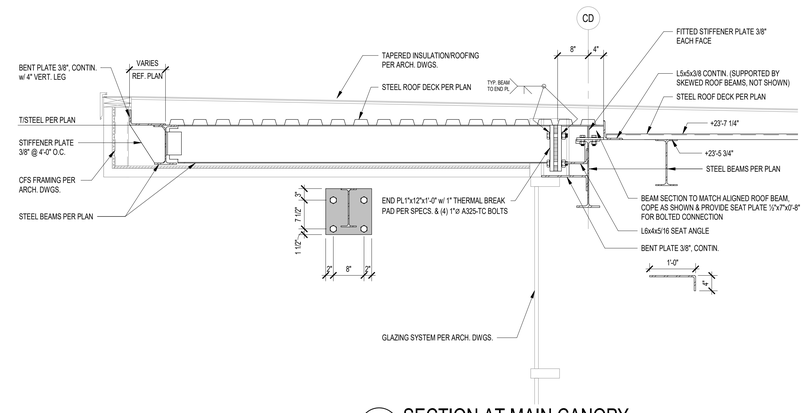

9 S703 SECTION AT MAIN CANOPY
SCALE: 3/4" = 1'-0"

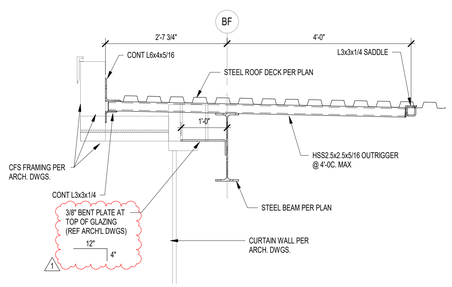

10 S703 SECTION
SCALE: 3/4" = 1'-0"

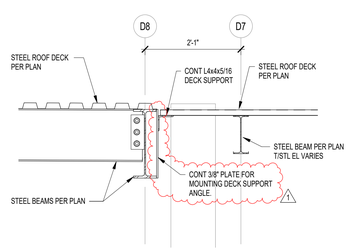

11 S703 SECTION
SCALE: 3/4" = 1'-0"

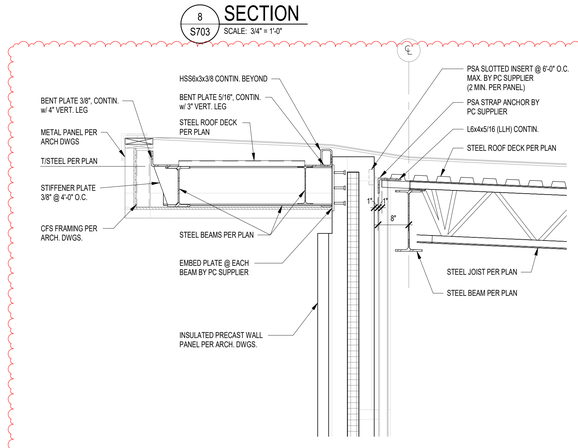

12 S703 SECTION
SCALE: 3/4" = 1'-0"

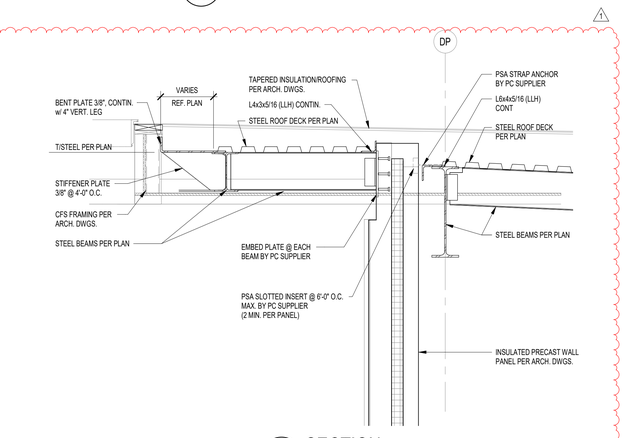

13 S703 SECTION
SCALE: 3/4" = 1'-0"

BCSC TOGETHER WE LEARN

CSO
8831 Keystone Crossing, Indianapolis, IN 46240
317.848.7800 | csoinc.net
© 2018 CSO Architects, Inc. All Rights Reserved

Lynch, Harrison & Brumleve, Inc.

PROJECT:
BARTHOLOMEW CONSOLIDATED SCHOOL CORPORATION
MAPLE GROVE ELEMENTARY
TIPTON LAKES BLVD, COLUMBUS, IN 47201

SCOPE DRAWINGS:
These drawings indicate the general scope of the project in terms of architectural design concept, the dimensions of the building, the major architectural elements and the type and quantity of materials to be incorporated in the work.
The drawings do not necessarily indicate or describe all work required for full performance and completion of the contract for the work.
On the basis of the general scope indicated or described, the trade contractors shall furnish all items required for the proper execution and completion of the work.

REVISIONS:

1	ADD #2	06/17/25

ISSUE DATE	DRAWN BY	CHECKED BY
05/30/2025	NMA/JRO/MDL	MDL

DRAWING TITLE:
SECTIONS AND DETAILS

CERTIFIED BY:
MARK D. LAVICK REGISTERED PE19400114 STATE OF INDIANA PROFESSIONAL ENGINEER

DRAWING NUMBER
S703

PROJECT NUMBER
2024022

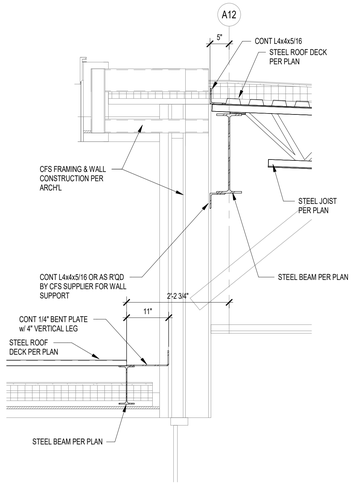

1 SECTION
S713 SCALE: 3/4" = 1'-0"

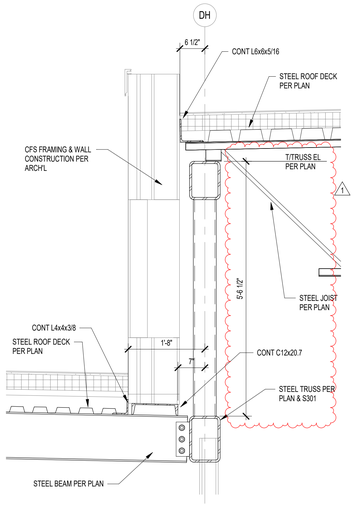

2 SECTION
S713 SCALE: 3/4" = 1'-0"

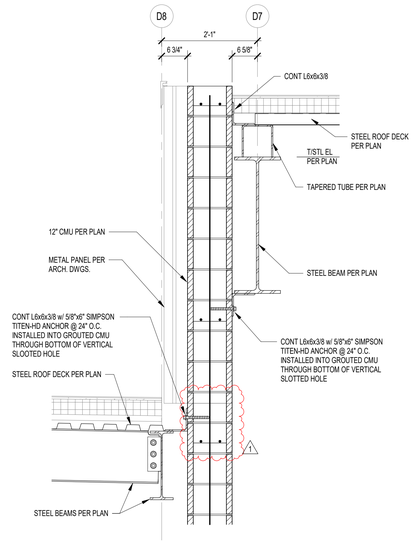

3 SECTION
S713 SCALE: 3/4" = 1'-0"

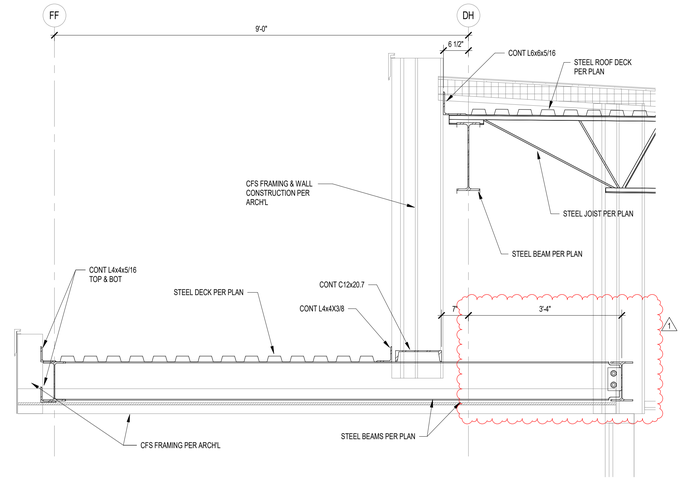

4 SECTION
S713 SCALE: 3/4" = 1'-0"

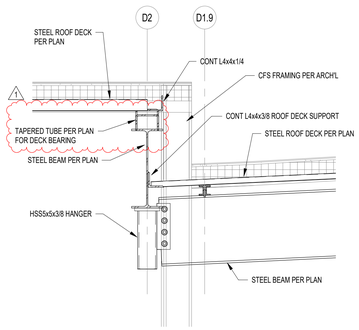

5 SECTION
S713 SCALE: 3/4" = 1'-0"

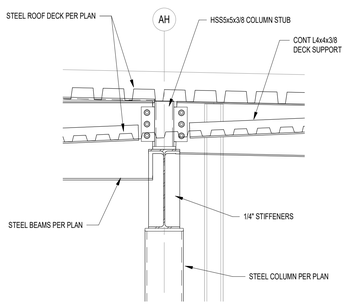

6 SECTION
S713 SCALE: 3/4" = 1'-0"

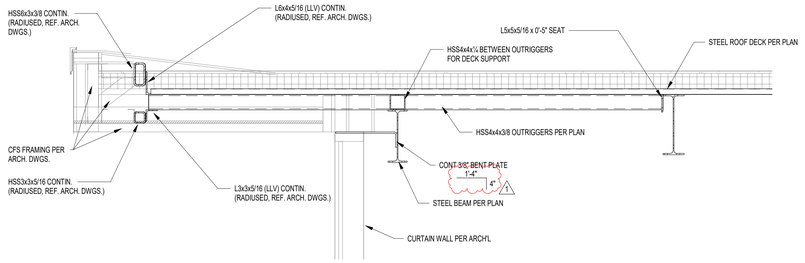

7 SECTION
S713 SCALE: 3/4" = 1'-0"

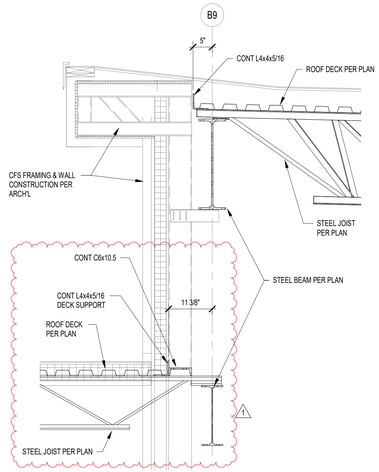

8 SECTION
S713 SCALE: 3/4" = 1'-0"

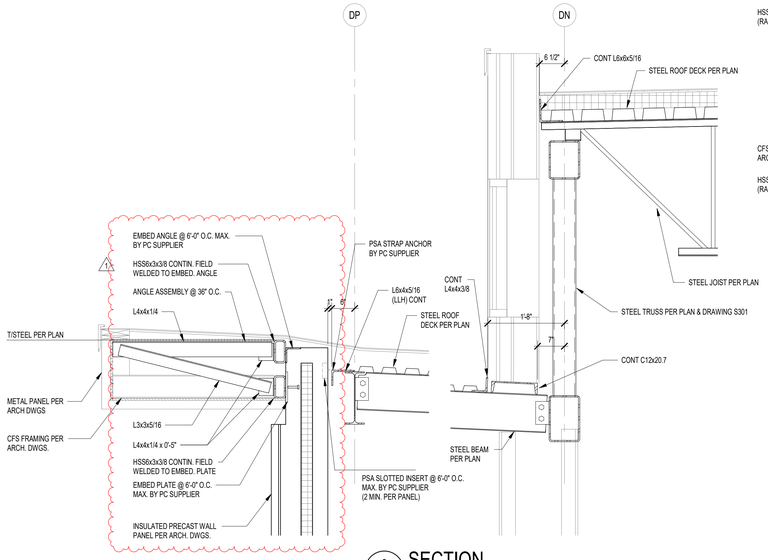

9 SECTION
S713 SCALE: 3/4" = 1'-0"

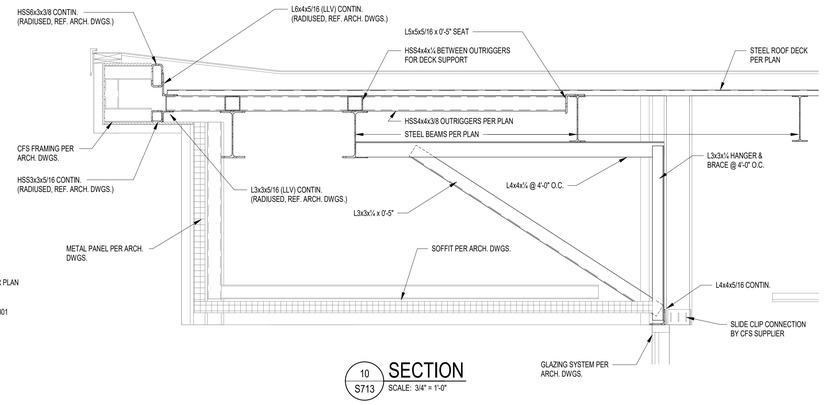

10 SECTION
S713 SCALE: 3/4" = 1'-0"

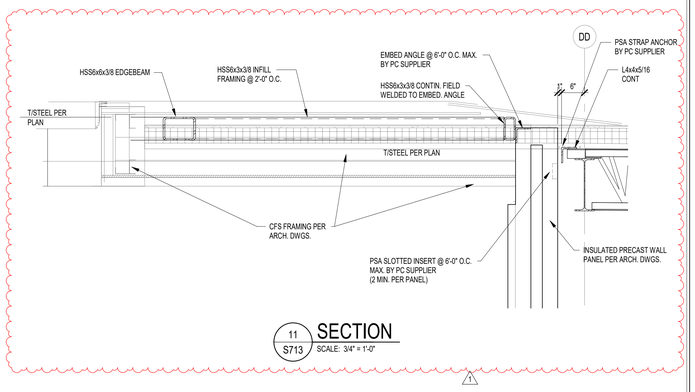

11 SECTION
S713 SCALE: 3/4" = 1'-0"

BCSC
TOGETHER WE LEARN

CSO
8831 Keystone Crossing, Indianapolis, IN 46240
317.848.7800 | csoinc.net
© 2018 CSO Architects, Inc. All Rights Reserved

Lynch, Harrison & Brumleve, Inc.

PROJECT:
BARTHOLOMEW CONSOLIDATED SCHOOL CORPORATION
MAPLE GROVE ELEMENTARY
TIPTON LAKES BLVD, COLUMBUS, IN 47201

SCOPE DRAWINGS:
These drawings indicate the general scope of the project in terms of architectural design concept, the dimensions of the building, the major architectural elements and the type of construction and finishes to be provided and used.
The drawings do not necessarily indicate or describe all work required for full performance and completion of the building and site work.
On the basis of the general scope indicated or described the trade contractors shall furnish all items required for the proper execution and completion of the work.

REVISIONS:

1	ADD #2	06/17/25

ISSUE DATE	DRAWN BY	CHECKED BY
05/30/2025	NMA/JRO/MDL	MDL

DRAWING TITLE:
SECTIONS AND DETAILS

CERTIFIED BY:
MARK D. LAVIER
REGISTERED
PE19400114
STATE OF INDIANA
PROFESSIONAL ENGINEER

DRAWING NUMBER
S713

PROJECT NUMBER
2024022

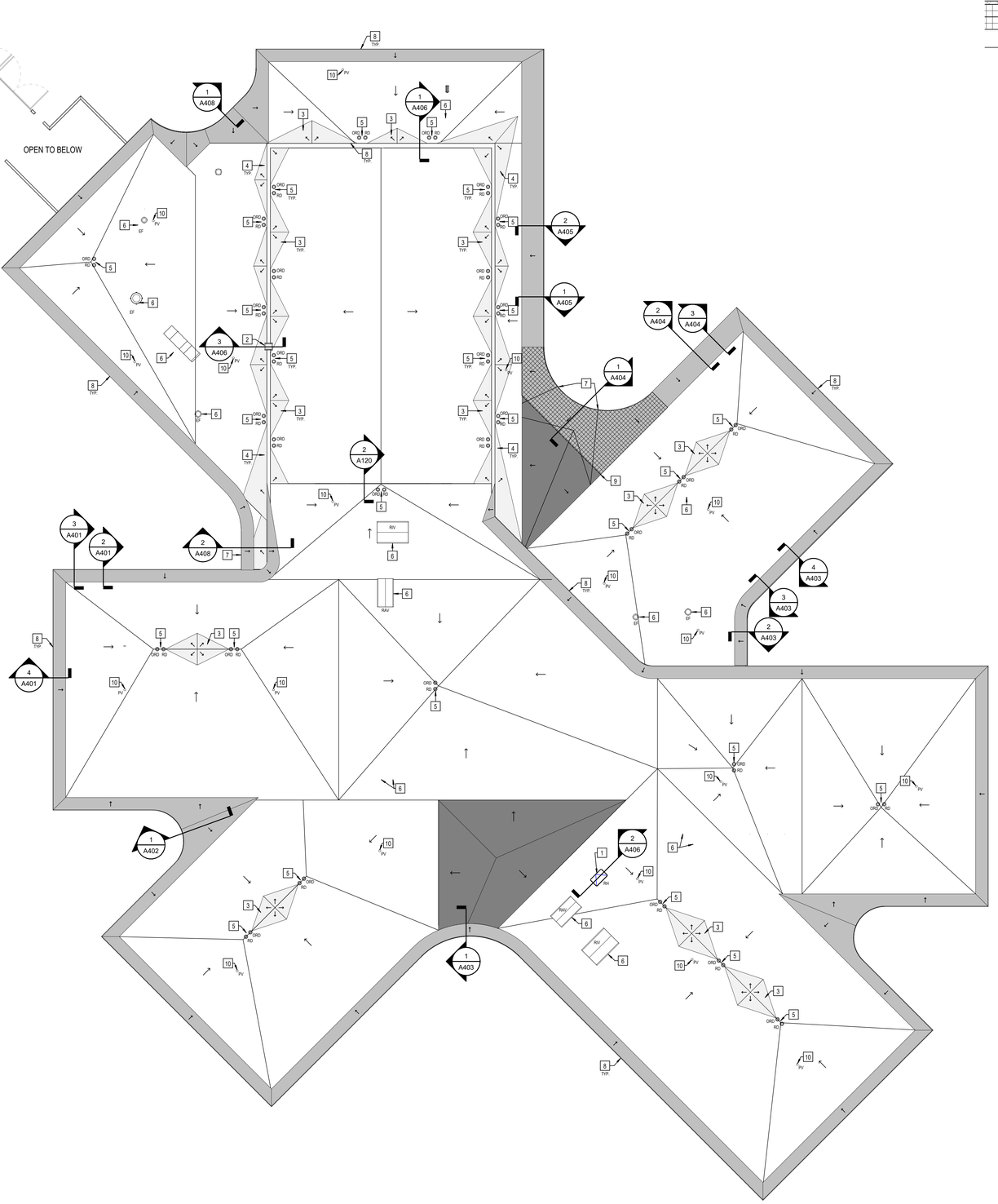

1 A120 COMPOSITE ROOF PLAN
SCALE: 1/16" = 1'-0"

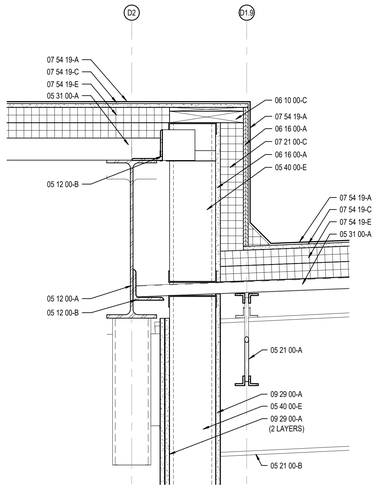

2 A120 ROOF DETAIL
SCALE: 1 1/2" = 1'-0"

GENERAL ROOF NOTES

1. ALL WORK SHALL BE IN ACCORDANCE WITH THE BEST QUALITY STANDARDS OF THE TRADE, AND SHALL CONFORM WITH THE LATEST EDITION OF ALL FEDERAL, STATE, AND LOCAL CODES AND STANDARDS. THE SAME ARE MADE A PART OF THESE CONTRACT DOCUMENTS, AS IF REPEATED HEREIN.
2. CONTRACT DOCUMENTS CONSIST OF BOTH THE PROJECT MANUAL AND DRAWINGS, AND BOTH ARE INTENDED TO BE COMPLEMENTARY. ANYTHING APPEARING ON EITHER MUST BE EXECUTED THE SAME AS IF SHOWN ON BOTH.
3. CONSTRUCTION DOCUMENTS SHALL BE FOLLOWED AS CLOSELY AS POSSIBLE, HOWEVER, SYSTEMS HAVE BEEN SHOWN DIAGRAMMATICALLY AND IN SOME CASES, ENLARGED FOR CLARITY. PROVIDE ADDITIONAL ITEMS AS REQUIRED TO PROVIDE A COMPLETE AND COORDINATED SYSTEM.
4. CONTRACTOR SHALL PROVIDE ANY AND ALL TEMPORARY UTILITY SERVICE REQUIRED TO CONSTRUCT THE WORK. CONTRACTOR MAY EXTEND SERVICES FROM EXISTING LOCATIONS TO WHERE THEY ARE REQUIRED. REMOVE TEMPORARY UTILITIES AND RELATED EXTENSIONS AS SOON AS PRACTICABLE. RESTORE ALL AFFECTED AREAS TO ORIGINAL CONDITION.
5. CONTRACTOR SHALL REMOVE CONSTRUCTION DEBRIS FROM THE BUILDING AND ROOF DAILY.
6. STORE VOLATILE OR FLAMMABLE LIQUIDS IN UL LISTED FIRE CABINETS.
7. CONTRACTOR SHALL BE SOLELY RESPONSIBLE FOR THE SECURITY OF ALL STORED MATERIALS AND EQUIPMENT INSIDE OR OUTSIDE THE BUILDING.
8. CONTRACTOR SHALL FURNISH NECESSARY TEMPORARY PROTECTION FROM WEATHER TO PROTECT INTERIOR OF BUILDING FROM ELEMENTS OF WEATHER AT ALL TIMES.
9. CONTRACTOR RESPONSIBLE FOR TRAFFIC PROTECTION DURING CONSTRUCTION. AREAS OF WORK SUBJECTED TO TRAFFIC BY VARIOUS TRADES SHALL BE PROTECTED BY TEMPORARY WALK PADS.
10. PROVIDE TREATED WOOD BLOCKING EQUAL IN THICKNESS TO INSULATION SYSTEM AT ROOF PERIMETER AND AROUND ALL ROOF PENETRATIONS. ANCHOR PER SECTION I-49 OF THE FM GLOBAL LOSS PREVENTION GUIDE.
11. EXTEND ALL PLUMBING VENTS TO PROVIDE A MIN. OF 12" OF HEIGHT FROM TOP OF INSULATION. ALL FITTINGS TO BE AIR AND WATER TIGHT. SEE PLUMBING PLANS FOR LOCATIONS.
12. ROOF INSULATION SADDLES AND CRICKETS ARE DIAGRAMMATIC. ROOF INSULATION MANUFACTURER SHALL DESIGN AND SIZE THESE PER THE ROOF MEMBRANE MANUFACTURERS RECOMMENDATIONS. CRICKETS AND SADDLES SHOULD HAVE A MINIMUM OF TWO TIMES THE SLOPE OF THE PRIMARY TAPERED SYSTEM OR STRUCTURAL SLOPE. THE RATIO OF A CRICKET'S WIDTH TO LENGTH SHOULD BE NO LESS THAN 1 TO 3.
13. PROVIDE SADDLES/CRICKETS AROUND ALL NEW ROOF TOP EQUIPMENT. SEE MECHANICAL, ELECTRICAL AND PLUMBING DRAWINGS FOR LOCATIONS OF ALL ROOF PENETRATIONS.
14. PROVIDE TAPERED INSULATION WHERE REQUIRED TO TRANSITION FROM ONE INSULATION HEIGHT TO ANOTHER.
15. NOTCH ALL INSULATION AS REQUIRED TO ACCOMMODATE SURFACE MOUNTED CONDUIT, FASTENERS, OFFSETS AND OTHER PROJECTIONS EXTENDING ABOVE THE SURFACE OF THE DECK.
16. PERIMETER EDGE METAL TO COMPLY WITH ANSI/SPRI ES-1 FM GLOBAL 1-49.
17. SEE MECHANICAL, ELECTRICAL AND PLUMBING (MEP) SHEETS FOR ROOF TOP EQUIPMENT.
18. INSPECT ALL WOOD BLOCKING SCHEDULED TO REMAIN. NOTIFY ARCHITECT OF ANY DETERIORATED BLOCKING NEEDING REPLACEMENT. CONTRACTOR TO REPLACE AND DAMAGED BLOCKING ON A TIME AND MATERIAL BASIS, SEE SPECIFICATIONS.
19. ALL ROOF DETAIL DRAWINGS CONTAINED IN THIS SET ARE DIAGRAMMATIC. ADJUST ROOF DETAILS BASED ON SPECIFIC ROOFING SYSTEM SELECTED ACCORDING TO MANUFACTURER'S WRITTEN SPECIFICATIONS AND APPROVED DETAIL DRAWINGS. ALL ASSEMBLY COMPLICATIONS SHOULD BE BROUGHT TO THE ATTENTION OF THE ARCHITECT.
20. THE ROOF CONTRACTOR SHALL PROTECT ALL ROOF DRAINS, GUTTERS AND DOWNSPOUTS FROM DEBRIS CREATED DURING CONSTRUCTION. THE ROOF CONTRACTOR SHALL CLEAR ALL DRAINS, GUTTERS AND DOWNSPOUTS PRIOR TO COMPLETION OF WORK AND TO ENSURE THAT THEY ARE FREE OF DEBRIS AND FUNCTIONING PROPERLY.
21. MECHANICAL, ELECTRICAL AND PLUMBING INFORMATION SHOWN ON THIS PLAN IS GENERAL IN NATURE. REFER TO P, M AND E DRAWINGS FOR FURTHER INFORMATION AND COORDINATE ALL REQUIRED ROOF OPENINGS OR ROOF MOUNTED EQUIPMENT.

ROOF ABBREVIATIONS

EF	EXHAUST FAN; SEE MECHANICAL
PV	PLUMBING VENT
ORD	OVERFLOW ROOF DRAIN; SEE PLUMBING
RD	ROOF DRAIN; SEE PLUMBING
RAV	RELIEF AIR VENT; SEE MECHANICAL
RIV	ROOF INTAKE VENT
RH	ROOF HATCH

ROOF PLAN NOTES

1. 3'x3' ROOF ACCESS HATCH AND LADDER LOCATION.
2. EXTERIOR ROOF ACCESS LADDER LOCATION. O'KEEFE'S 503A OR APPROVED EQUAL.
3. 1/2" PER FOOT SLOPE ROOF INSULATION CRICKET, TYPICAL.
4. 1/3" PER FOOT SLOPE ROOF INSULATION CRICKET, TYPICAL.
5. STANDARD ROOF DRAIN AND OVERFLOW DRAIN. FLASH PER MANUFACTURERS STANDARD DETAILS AND PER OVERALL SYSTEM WARRANTY.
6. MECHANICAL EQUIPMENT ON ROOF CURB. TOP OF CURB MINIMUM 12" ABOVE ROOF SURFACE. FLASH PER MANUFACTURERS STANDARD DETAILS AND PER OVERALL SYSTEM WARRANTY.
7. INSULATION THICKNESS AT EDGE OF ROOF TO BE 5 1/2" MAXIMUM.
8. MANUFACTURED ROOF FASCIA, TYPICAL.
9. LINE OF STEPPED ROOF DECK. SEE SECTION DETAILS FOR INSULATION CONDITIONS AT STEPPED ROOF DECK.
10. PLUMBING VENT. FLASH PER MANUFACTURERS STANDARD DETAILS AND PER OVERALL SYSTEM WARRANTY.

ROOF TYPES

TYPE "A"	FULLY ADHERED PVC ROOF MEMBRANE, 1/2" COVERBOARD, 2 LAYERS OF 2" POLYISOCYANURATE ROOF INSULATION OVER AIR AND VAPOR BARRIER ON SLOPED METAL DECK.
TYPE "B"	TAPERED INSULATION TO ACHIEVE POSITIVE DRAINAGE TO MAIN ROOF - SEE A400 SERIES SECTIONS FOR DETAILS. AIR AND VAPOR BARRIER TO BE PROVIDED BETWEEN INSULATION AND METAL DECK, TYPICAL.
TYPE "C"	TAPERED INSULATION ON ELEVATED ROOF DECK TO ACHIEVE POSITIVE DRAINAGE TO MAIN ROOF - SEE A400 SERIES SECTIONS FOR DETAILS. AIR AND VAPOR BARRIER TO BE PROVIDED BETWEEN INSULATION AND METAL DECK, TYPICAL.
TYPE "D"	FULLY ADHERED PVC ROOF MEMBRANE, 1/2" COVERBOARD, 1/4" PER FOOT TAPERED INSULATION, 2 LAYERS OF 2" POLYISOCYANURATE ROOF INSULATION OVER AIR AND VAPOR BARRIER ON FLAT METAL DECK.

2

BCSC TOGETHER WE LEARN

CSO
8831 Keystone Crossing, Indianapolis, IN 46240
317.848.7800 | csoinc.net

© 2025 CSO Architects, Inc. All Rights Reserved

Howeler+Yoon Architecture
617.517.4101 howeleryoon.com

PROJECT:
BARTHOLOMEW CONSOLIDATED SCHOOL CORPORATION
MAPLE GROVE ELEMENTARY
TIPTON LAKES BLVD, COLUMBUS, IN 47201

SCOPE DRAWINGS:
These drawings indicate the general scope of the project in terms of architectural design concept, the dimensions of the building, the major architectural elements and the type of construction and finishes to be provided.
The drawings do not necessarily indicate or describe all work required for full performance and completion of the requirements of the Contract.
On the basis of the general scope indicated or described, the contractor shall provide all labor and materials required for the proper execution and completion of the work.

REVISIONS:

ISSUE DATE	DRAWN BY	CHECKED BY
05/30/2025	LNM	ECN

DRAWING TITLE:
COMPOSITE ROOF PLAN

CERTIFIED BY:
JAMES R. FUNK REGISTERED AR0900003 STATE OF INDIANA ARCHITECT

DRAWING NUMBER
A120

PROJECT NUMBER
2024022

1 A211B FIRST FLOOR REFLECTED CEILING PLAN - UNIT B

SCALE: 1/8" = 1'-0"

GENERAL REFLECTED CEILING PLAN NOTES

A. SEE THE ELECTRICAL DRAWINGS FOR SIZES, TYPES, AND QUANTITIES OF LIGHT FIXTURES, SPEAKERS, SMOKE DETECTORS, AND OTHER CEILING MOUNTED ELECTRICAL DEVICES.
B. SEE THE MECHANICAL DRAWINGS FOR SIZES, TYPES, AND QUANTITIES OF DIFFUSERS, GRILLES, AND OTHER MECHANICAL CEILING MOUNTED DEVICES.
C. PROVIDE, FIELD LOCATE AND INSTALL 16"x16" FLUSH ACCESS PANELS AT ALL MECHANICAL AND PLUMBING PIPING VALVE LOCATIONS ABOVE SUSPENDED GYPSUM BOARD CEILINGS. SEE THE MECHANICAL, AND PLUMBING DRAWINGS FOR LOCATIONS.
D. SEE THE STRUCTURAL DRAWINGS FOR MASONRY WALLS USED FOR SHEAR WALLS THAT ARE REQUIRED TO EXTEND TO DECK/STRUCTURE ABOVE. PROVIDE BRACING FOR ALL MASONRY WALLS NOT EXTENDING TO THE DECK/STRUCTURE AS DETAILED ON STRUCTURAL DRAWINGS.
E. METAL STUDS WALLS SHALL BE ATTACHED TO THE STRUCTURE ABOVE WITH SLIP CONNECTORS. STUD WALLS NOT EXTENDING TO THE STRUCTURE/DECK ABOVE SHALL RECEIVE DIAGONAL METAL STUD BRACING AT MAXIMUM 4'-0" O.C.
F. THE SUSPENDED ACOUSTICAL TILE CEILING GRID AS SHOWN ON THESE DRAWINGS IS REPRESENTATIONAL. THE CEILING GRID IS TO BROKEN AS REQUIRED AT LIGHT FIXTURES, PROJECTION SCREENS, ETC.
G. ALL GYPSUM CEILINGS AND BULKHEADS ARE TO BE PAINTED (P--) UNLESS NOTED OTHERWISE. PAINT COLORS TO BE REFERENCED ON THE A800 SERIES FINISH LEGEND.
H. SEE MECHANICAL, PLUMBING AND ELECTRICAL DOCUMENTS FOR ADDITIONAL CEILING WORK REQUIRED BY NEW MEP WORK.

REFLECTED CEILING LEGEND

- LED LIGHT FIXTURES, RECESSED OR SURFACED MOUNTED, SEE ELECTRICAL DRAWINGS
- DOWNLIGHT/HIGH BAY LIGHT FIXTURE; SEE ELECTRICAL DRAWINGS
- RETURN/EXHAUST GRILL; SEE MECHANICAL DRAWINGS
- SUPPLY AIR GRILL; SEE MECHANICAL DRAWINGS
- LINEAR SLOT SUPPLY AIR GRILL; SEE MECHANICAL DRAWINGS
- CL1 — SUSPENDED ACOUSTICAL LAY-IN CEILING
  MFG: ARMSTRONG MODEL #1713
  STYLE: SCHOOL ZONE HIGH CAC, HIGH NRC
  DESCRIPTION: SQUARE EDGE
  COLOR: WHITE SIZE: 24" x 24" x 3/4"
  LOCATION: CLASSROOMS, CORRIDORS, OFFICES, ETC.
- CL2 — SUSPENDED ACOUSTICAL LAY-IN CEILING
  MFG: ARMSTRONG MODEL #1935
  STYLE: ULTIMA HEALTH ZONE
  DESCRIPTION: SQUARE EDGE
  COLOR: WHITE SIZE: 2' x 2' x 3/4"
  LOCATION: RESTROOMS/KITCHENS
- CL3 — SUSPENDED GYPSUM WALLBOARD CEILING SYSTEM
  USE 5/8" WALLBOARD
  PAINT: (P1) UNLESS NOTED OTHERWISE ON PLAN. REFER TO FINISH LEGEND ON A800.
- CL4 — GYPSUM WALLBOARD BULKHEAD
  PAINT: (P1) UNLESS NOTED OTHERWISE ON PLAN. REFER TO FINISH LEGEND ON A800.
- CL5 — SUSPENDED WOOD CEILING
  MFG: ARMSTRONG
  STYLE: WOODWORKS GRILLE FORTE VENEER CEILING PANELS
  DESCRIPTION: PROVIDE 4" PERIMETER TRIM AND BLACK FINE FISSURED INFILL PANELS. BLACK FINE FISSURED INFILL PANELS AT ACTIVITY COMMONS ONLY
  COLOR: CONSTANTS REDUX WOOD WHEAT (CRW) SIZE: 12" x 96", 4" SLAT HEIGHT, 3 SLATS PER PANEL
  LOCATION: ACTIVITY COMMONS, RECEPTION
- CL6 — SUSPENDED METAL CEILING
  MFG: ARMSTRONG METALWORKS LINEAR
  STYLE: METALWORKS LINEAR
  DESCRIPTION: MICROPERFORATED, PROVIDE 4" METAL EDGE TRIM AT PERIMETER
  COLOR: WHITE (WH) SIZE: 96" x 4" x 5/8"
  LOCATION: DISCOVERY CENTER
- CL7 — ACOUSTIC CEILING BAFFLE SYSTEM
  MFG: ARMSTRONG
  STYLE: SOUNDSCAPES BLADES
  COLOR: VANILLA ASH SIZE: 28" x 94" W/ CUSTOM SPACING
  LOCATION: CAFETERIA
- CL8 — SUSPENDED ACOUSTICAL LAY-IN CEILING
  MFG: ARMSTRONG
  STYLE: LYRA PLANT BASED
  DESCRIPTION: SQUARE TEGULAR 9/16
  COLOR: WHITE (WH), CUSTOM TO MATCH SW7547 (P2) (REFER TO PLAN) SIZE: 12" x 96"
  LOCATION: NEIGHBORHOOD ENTRANCES
- CL9 — COMPOSITE METAL SOFFIT PANEL
  COLOR: GRAPHITE MICA
  SEE SECTIONS FOR MORE INFORMATION
- CL10 — COMPOSITE METAL SOFFIT PANEL
  COLOR: COLORADO GOLD METALLIC
  SEE SECTIONS FOR MORE INFORMATION
- EXP. — EXPOSED STRUCTURE
  NO PAINTING EXCEPT AS REQUIRED FOR MEP (TYPICALLY FOR CODING OF SYSTEMS)
- EXP. PT. — EXPOSED STRUCTURE - PAINTED (P7); REFER TO FINISH LEGEND ON A800
- +0'-0" — CEILING ELEVATION MARK ABOVE FINISHED FLOOR (AT THAT LOCATION IF MULTIPLE FLOOR LEVELS ARE PRESENT)
- XX — CEILING PAINT; REFER TO FINISH LEGEND ON A800

RCP NOTES

1 BULKHEAD. SEE DETAIL 1/A213.
2 BULKHEAD. SEE DETAIL 2/A213.
3 BULKHEAD. SEE DETAIL 3/A213.
4 BULKHEAD. SEE DETAIL 4/A213.
5 BULKHEAD. SEE DETAIL 5/A213.
6 BULKHEAD. SEE DETAIL 6/A213.
7 BULKHEAD. SEE DETAIL 7/A213.
8 BULKHEAD. SEE DETAIL 8/A213.
9 ALIGN FINISH FACES.
10 PANEL JOINT, TYPICAL.
11 SEE DETAIL 9/A213.
12 ALIGN BOTTOM OF BULKHEAD TO TOP OF ADJACENT HORIZONTAL CONTROL JOINT
13 CEILING TILE AND GRID TO MATCH SHERWIN WILLIAMS SW7547 SANDBAR.

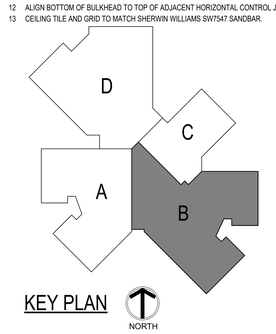

KEY PLAN

BCSC TOGETHER WE LEARN

CSO
8831 Keystone Crossing, Indianapolis, IN 46240
317.848.7800 | csoinc.net

© 2025 CSO Architects, Inc. All Rights Reserved

Howeler+Yoon Architecture
617.517.4101 howeleryoon.com

PROJECT:
BARTHOLOMEW CONSOLIDATED SCHOOL CORPORATION
MAPLE GROVE ELEMENTARY
TIPTON LAKES BLVD, COLUMBUS, IN 47201

SCOPE DRAWINGS:
These drawings indicate the general scope of the project. In interpreting these drawings, the general nature of the work, the building, the major architectural elements and the type of structural, mechanical and electrical systems. These drawings do not necessarily indicate or describe all work required for full performance and completion of the requirements of the Contract.
On the basis of the general scope indicated or described, the trade contractors shall furnish all items required for the proper execution and completion of the work.

REVISIONS:

2	ADDENDUM #2	06/17/2025

ISSUE DATE	DRAWN BY	CHECKED BY
05/30/2025	LNM	ECN

DRAWING TITLE:
FIRST FLOOR REFLECTED CEILING PLAN - UNIT B

CERTIFIED BY:
JAMES R. FUNK REGISTERED AR0900003 STATE OF INDIANA ARCHITECT

DRAWING NUMBER
A211B

PROJECT NUMBER
2024022

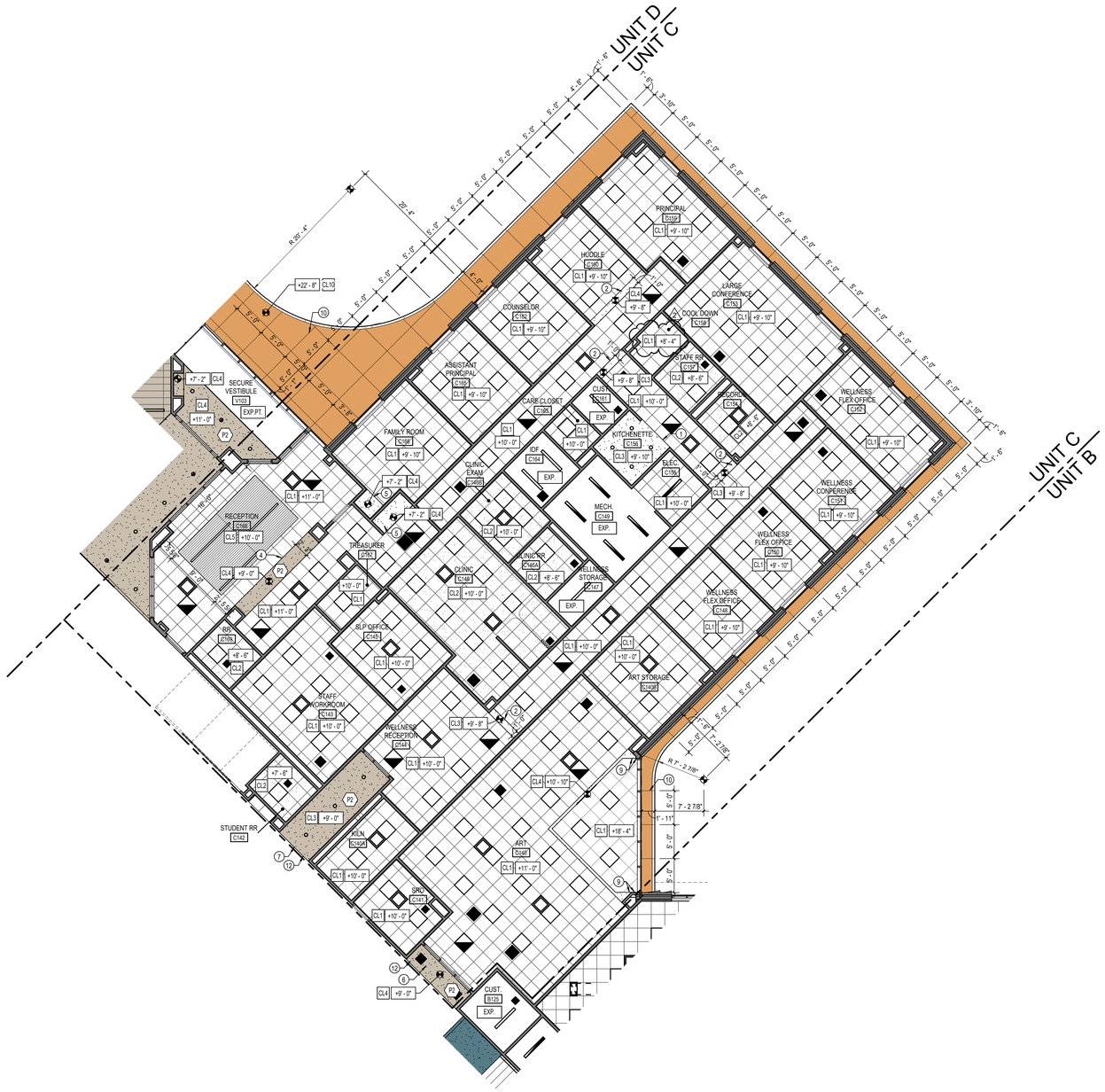

1 A211C FIRST FLOOR REFLECTED CEILING PLAN - UNIT C

SCALE: 1/8" = 1'-0"

GENERAL REFLECTED CEILING PLAN NOTES

A. SEE THE ELECTRICAL DRAWINGS FOR SIZES, TYPES, AND QUANTITIES OF LIGHT FIXTURES, SPEAKERS, SMOKE DETECTORS, AND OTHER CEILING MOUNTED ELECTRICAL DEVICES.
B. SEE THE MECHANICAL DRAWINGS FOR SIZES, TYPES, AND QUANTITIES OF DIFFUSERS, GRILLES, AND OTHER MECHANICAL CEILING MOUNTED DEVICES.
C. PROVIDE, FIELD LOCATE AND INSTALL 16"x16" FLUSH ACCESS PANELS AT ALL MECHANICAL AND PLUMBING PIPING VALVE LOCATIONS ABOVE SUSPENDED GYPSUM BOARD CEILINGS. SEE THE MECHANICAL, AND PLUMBING DRAWINGS FOR LOCATIONS.
D. SEE THE STRUCTURAL DRAWINGS FOR MASONRY WALLS USED FOR SHEAR WALLS THAT ARE REQUIRED TO EXTEND TO DECK/STRUCTURE ABOVE. PROVIDE BRACING FOR ALL MASONRY WALLS NOT EXTENDING TO THE DECK/STRUCTURE AS DETAILED ON STRUCTURAL DRAWINGS.
E. METAL STUDS WALLS SHALL BE ATTACHED TO THE STRUCTURE ABOVE WITH SLIP CONNECTORS. STUD WALLS NOT EXTENDING TO THE STRUCTURE/DECK ABOVE SHALL RECEIVE DIAGONAL METAL STUD BRACING AT MAXIMUM 4'-0" O.C.
F. THE SUSPENDED ACOUSTICAL TILE CEILING GRID AS SHOWN ON THESE DRAWINGS IS REPRESENTATIONAL. THE CEILING GRID IS TO BROKEN AS REQUIRED AT LIGHT FIXTURES, PROJECTION SCREENS, ETC.
G. ALL GYPSUM CEILINGS AND BULKHEADS ARE TO BE PAINTED (P–) UNLESS NOTED OTHERWISE. PAINT COLORS TO BE REFERENCED ON THE A800 SERIES FINISH LEGEND.
H. SEE MECHANICAL, PLUMBING AND ELECTRICAL DOCUMENTS FOR ADDITIONAL CEILING WORK REQUIRED BY NEW MEP WORK.

REFLECTED CEILING LEGEND

- LED LIGHT FIXTURES, RECESSED OR SURFACED MOUNTED, SEE ELECTRICAL DRAWINGS
- DOWNLIGHT/HIGH BAY LIGHT FIXTURE; SEE ELECTRICAL DRAWINGS
- RETURN/EXHAUST GRILL; SEE MECHANICAL DRAWINGS
- SUPPLY AIR GRILL; SEE MECHANICAL DRAWINGS
- LINEAR SLOT SUPPLY AIR GRILL; SEE MECHANICAL DRAWINGS
- CL1 — SUSPENDED ACOUSTICAL LAY-IN CEILING
  MFG: ARMSTRONG MODEL #1713
  STYLE: SCHOOL ZONE HIGH CAC, HIGH NRC
  DESCRIPTION: SQUARE EDGE
  COLOR: WHITE SIZE: 24" x 24" x 3/4"
  LOCATION: CLASSROOMS, CORRIDORS, OFFICES, ETC.
- CL2 — SUSPENDED ACOUSTICAL LAY-IN CEILING
  MFG: ARMSTRONG MODEL #1935
  STYLE: ULTIMA HEALTH ZONE
  DESCRIPTION: SQUARE EDGE
  COLOR: WHITE SIZE: 2' x 2' x 3/4"
  LOCATION: RESTROOMS/KITCHENS
- CL3 — SUSPENDED GYPSUM WALLBOARD CEILING SYSTEM
  USE 5/8" WALLBOARD
  PAINT: (P1) UNLESS NOTED OTHERWISE ON PLAN. REFER TO FINISH LEGEND ON A800.
- CL4 — GYPSUM WALLBOARD BULKHEAD
  PAINT: (P1) UNLESS NOTED OTHERWISE ON PLAN. REFER TO FINISH LEGEND ON A800.
- CL5 — SUSPENDED WOOD CEILING
  MFG: ARMSTRONG
  STYLE: WOODWORKS GRILLE FORTE VENEER CEILING PANELS
  DESCRIPTION: PROVIDE 4" PERIMETER TRIM AND BLACK FINE FISSURED INFILL PANELS. BLACK FINE FISSURED INFILL PANELS AT ACTIVITY COMMONS ONLY.
  COLOR: CONSTANTS REDUX WOOD WHEAT (CRW) SIZE: 12" x 96", 4" SLAT HEIGHT, 3 SLATS PER PANEL
  LOCATION: ACTIVITY COMMONS, RECEPTION
- CL6 — SUSPENDED METAL CEILING
  MFG: ARMSTRONG METALWORKS LINEAR
  STYLE: METALWORKS LINEAR
  DESCRIPTION: MICROPERFORATED, PROVIDE 4" METAL EDGE TRIM AT PERIMETER
  COLOR: WHITE (WH) SIZE: 96" x 4" x 5/8"
  LOCATION: DISCOVERY CENTER
- CL7 — ACOUSTIC CEILING BAFFLE SYSTEM
  MFG: ARMSTRONG
  STYLE: SOUNDSCAPES BLADES
  COLOR: VANILLA ASH SIZE: 28" x 94" W/ CUSTOM SPACING
  LOCATION: CAFETERIA
- CL8 — SUSPENDED ACOUSTICAL LAY-IN CEILING
  MFG: ARMSTRONG
  STYLE: LYRA PLANT BASED
  DESCRIPTION: SQUARE TEGULAR 9/16
  COLOR: WHITE (WH), CUSTOM TO MATCH SW7547 (P2) (REFER TO PLAN) SIZE: 12" x 96"
  LOCATION: NEIGHBORHOOD ENTRANCES
- CL9 — COMPOSITE METAL SOFFIT PANEL
  COLOR: GRAPHITE MICA
  SEE SECTIONS FOR MORE INFORMATION
- CL10 — COMPOSITE METAL SOFFIT PANEL
  COLOR: COLORADO GOLD METALLIC
  SEE SECTIONS FOR MORE INFORMATION
- EXP. — EXPOSED STRUCTURE
  NO PAINTING EXCEPT AS REQUIRED FOR MEP (TYPICALLY FOR CODING OF SYSTEMS)
- EXP. PT. — EXPOSED STRUCTURE - PAINTED (P7); REFER TO FINISH LEGEND ON A800
- +0'-0" — CEILING ELEVATION MARK ABOVE FINISHED FLOOR (AT THAT LOCATION IF MULTIPLE FLOOR LEVELS ARE PRESENT)
- XX — CEILING PAINT; REFER TO FINISH LEGEND ON A800

RCP NOTES

1 BULKHEAD. SEE DETAIL 1/A213.
2 BULKHEAD. SEE DETAIL 2/A213.
3 BULKHEAD. SEE DETAIL 3/A213.
4 BULKHEAD. SEE DETAIL 4/A213.
5 BULKHEAD. SEE DETAIL 5/A213.
6 BULKHEAD. SEE DETAIL 6/A213.
7 BULKHEAD. SEE DETAIL 7/A213.
8 BULKHEAD. SEE DETAIL 8/A213.
9 ALIGN FINISH FACES.
10 PANEL JOINT, TYPICAL.
11 SEE DETAIL 9/A213.
12 ALIGN BOTTOM OF BULKHEAD TO TOP OF ADJACENT HORIZONTAL CONTROL JOINT
13 CEILING TILE AND GRID TO MATCH SHERWIN WILLIAMS SW7547 SANDBAR.

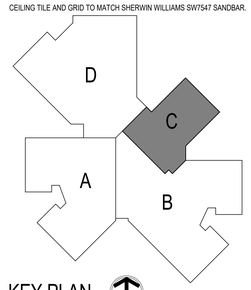

KEY PLAN

NORTH

BCSC TOGETHER WE LEARN

CSO
8831 Keystone Crossing, Indianapolis, IN 46240
317.848.7800 | csoinc.net

© 2025 CSO Architects, Inc. All Rights Reserved

Howeler+Yoon Architecture
617.517.4101 howeleryoon.com

PROJECT:
BARTHOLOMEW CONSOLIDATED SCHOOL CORPORATION
MAPLE GROVE ELEMENTARY
TIPTON LAKES BLVD, COLUMBUS, IN 47201

SCOPE DRAWINGS:
These drawings indicate the general scope of the project. They do not necessarily indicate or describe all work required for the building, the major architectural elements and the type of structural, mechanical and electrical systems.
The drawings do not necessarily indicate or describe all work required for full performance and completion of the building and site improvements.
On the basis of the general scope indicated or described, the trade contractors shall furnish all items required for the proper execution and completion of the work.

REVISIONS:

2	ADDENDUM #2	06/17/2025

ISSUE DATE	DRAWN BY	CHECKED BY
05/30/2025	LNM	ECN

DRAWING TITLE:
FIRST FLOOR REFLECTED CEILING PLAN - UNIT C

CERTIFIED BY:
JAMES R. FUNK REGISTERED AR0900003 STATE OF INDIANA ARCHITECT

DRAWING NUMBER
A211C

PROJECT NUMBER
2024022

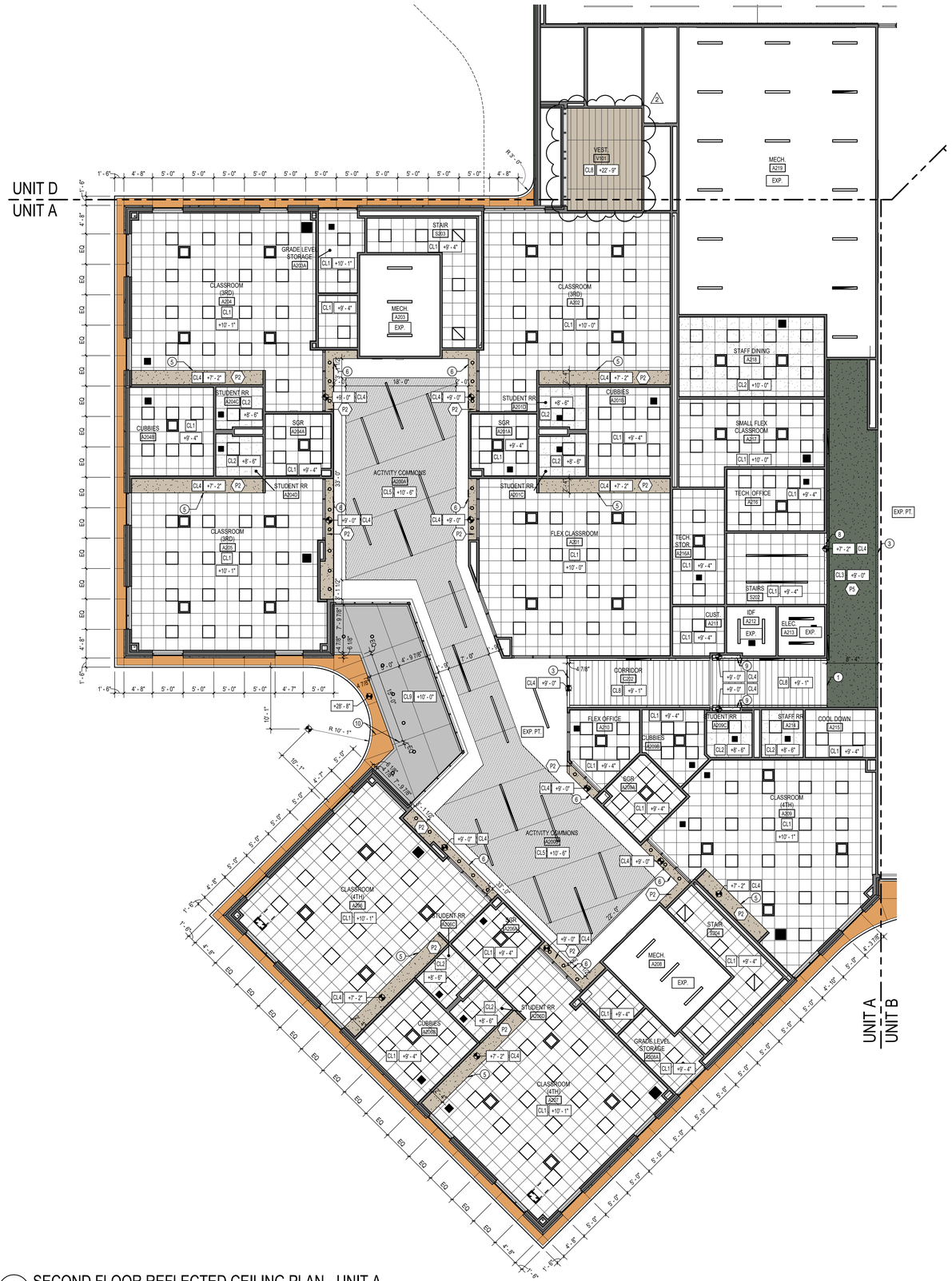

1 A212A SECOND FLOOR REFLECTED CEILING PLAN - UNIT A

SCALE: 1/8" = 1'-0"

GENERAL REFLECTED CEILING PLAN NOTES

A. SEE THE ELECTRICAL DRAWINGS FOR SIZES, TYPES, AND QUANTITIES OF LIGHT FIXTURES, SPEAKERS, SMOKE DETECTORS, AND OTHER CEILING MOUNTED ELECTRICAL DEVICES.
B. SEE THE MECHANICAL DRAWINGS FOR SIZES, TYPES, AND QUANTITIES OF DIFFUSERS, GRILLES, AND OTHER MECHANICAL CEILING MOUNTED DEVICES.
C. PROVIDE, FIELD LOCATE AND INSTALL 16"x16" FLUSH ACCESS PANELS AT ALL MECHANICAL AND PLUMBING PIPING VALVE LOCATIONS ABOVE SUSPENDED GYPSUM BOARD CEILINGS. SEE THE MECHANICAL, AND PLUMBING DRAWINGS FOR LOCATIONS.
D. SEE THE STRUCTURAL DRAWINGS FOR MASONRY WALLS USED FOR SHEAR WALLS THAT ARE REQUIRED TO EXTEND TO DECK/STRUCTURE ABOVE. PROVIDE BRACING FOR ALL MASONRY WALLS NOT EXTENDING TO THE DECK/STRUCTURE AS DETAILED ON STRUCTURAL DRAWINGS.
E. METAL STUDS WALLS SHALL BE ATTACHED TO THE STRUCTURE ABOVE WITH SLIP CONNECTORS. STUD WALLS NOT EXTENDING TO THE STRUCTURE/DECK ABOVE SHALL RECEIVE DIAGONAL METAL STUD BRACING AT MAXIMUM 4'-0" O.C.
F. THE SUSPENDED ACOUSTICAL TILE CEILING GRID AS SHOWN ON THESE DRAWINGS IS REPRESENTATIONAL. THE CEILING GRID IS TO BROKEN AS REQUIRED AT LIGHT FIXTURES, PROJECTION SCREENS, ETC.
G. ALL GYPSUM CEILINGS AND BULKHEADS ARE TO BE PAINTED (P--) UNLESS NOTED OTHERWISE. PAINT COLORS TO BE REFERENCED ON THE A800 SERIES FINISH LEGEND.
H. SEE MECHANICAL, PLUMBING AND ELECTRICAL DOCUMENTS FOR ADDITIONAL CEILING WORK REQUIRED BY NEW MEP WORK.

REFLECTED CEILING LEGEND

- LED LIGHT FIXTURES, RECESSED OR SURFACED MOUNTED, SEE ELECTRICAL DRAWINGS
- DOWNLIGHT/HIGH BAY LIGHT FIXTURE; SEE ELECTRICAL DRAWINGS
- RETURN/EXHAUST GRILL; SEE MECHANICAL DRAWINGS
- SUPPLY AIR GRILL; SEE MECHANICAL DRAWINGS
- LINEAR SLOT SUPPLY AIR GRILL; SEE MECHANICAL DRAWINGS
- CL1 — SUSPENDED ACOUSTICAL LAY-IN CEILING
  MFG: ARMSTRONG MODEL #1713
  STYLE: SCHOOL ZONE HIGH CAC, HIGH NRC
  DESCRIPTION: SQUARE EDGE
  COLOR: WHITE SIZE: 24" x 24" x 3/4"
  LOCATION: CLASSROOMS, CORRIDORS, OFFICES, ETC.
- CL2 — SUSPENDED ACOUSTICAL LAY-IN CEILING
  MFG: ARMSTRONG MODEL #1935
  STYLE: ULTIMA HEALTH ZONE
  DESCRIPTION: SQUARE EDGE
  COLOR: WHITE SIZE: 2' x 2' x 3/4"
  LOCATION: RESTROOMS/KITCHENS
- CL3 — SUSPENDED GYPSUM WALLBOARD CEILING SYSTEM
  USE 5/8" WALLBOARD
  PAINT: (P1) UNLESS NOTED OTHERWISE ON PLAN. REFER TO FINISH LEGEND ON A800.
- CL4 — GYPSUM WALLBOARD BULKHEAD
  PAINT: (P1) UNLESS NOTED OTHERWISE ON PLAN. REFER TO FINISH LEGEND ON A800.
- CL5 — SUSPENDED WOOD CEILING
  MFG: ARMSTRONG
  STYLE: WOODWORKS GRILLE FORTE VENEER CEILING PANELS
  DESCRIPTION: PROVIDE 4" PERIMETER TRIM AND BLACK FINE FISSURED INFILL PANELS. BLACK FINE FISSURED INFILL PANELS AT ACTIVITY COMMONS ONLY.
  COLOR: CONSTANTS REDUX WOOD WHEAT (CRW) SIZE: 12" x 96", 4" SLAT HEIGHT, 3 SLATS PER PANEL
  LOCATION: ACTIVITY COMMONS, RECEPTION
- CL6 — SUSPENDED METAL CEILING
  MFG: ARMSTRONG METALWORKS LINEAR
  STYLE: METALWORKS LINEAR
  DESCRIPTION: MICROPERFORATED, PROVIDE 4" METAL EDGE TRIM AT PERIMETER
  COLOR: WHITE (WH) SIZE: 96" x 4" x 5/8"
  LOCATION: DISCOVERY CENTER
- CL7 — ACOUSTIC CEILING BAFFLE SYSTEM
  MFG: ARMSTRONG
  STYLE: SOUNDSCAPES BLADES
  COLOR: VANILLA ASH SIZE: 28" x 94" W/ CUSTOM SPACING
  LOCATION: CAFETERIA
- CL8 — SUSPENDED ACOUSTICAL LAY-IN CEILING
  MFG: ARMSTRONG
  STYLE: LYRA PLANT BASED
  DESCRIPTION: SQUARE TEGULAR 9/16
  COLOR: WHITE (WH), CUSTOM TO MATCH SW7547 (P2) (REFER TO PLAN) SIZE: 12" x 96"
  LOCATION: NEIGHBORHOOD ENTRANCES
- CL9 — COMPOSITE METAL SOFFIT PANEL
  COLOR: GRAPHITE MICA
  SEE SECTIONS FOR MORE INFORMATION
- CL10 — COMPOSITE METAL SOFFIT PANEL
  COLOR: COLORADO GOLD METALLIC
  SEE SECTIONS FOR MORE INFORMATION
- EXP. — EXPOSED STRUCTURE
  NO PAINTING EXCEPT AS REQUIRED FOR MEP (TYPICALLY FOR CODING OF SYSTEMS)
- EXP. PT. — EXPOSED STRUCTURE - PAINTED (P?); REFER TO FINISH LEGEND ON A800
- +0'-0" — CEILING ELEVATION MARK ABOVE FINISHED FLOOR (AT THAT LOCATION IF MULTIPLE FLOOR LEVELS ARE PRESENT)
- XX — CEILING PAINT; REFER TO FINISH LEGEND ON A800

RCP NOTES

1 BULKHEAD. SEE DETAIL 1/A213.
2 BULKHEAD. SEE DETAIL 2/A213.
3 BULKHEAD. SEE DETAIL 3/A213.
4 BULKHEAD. SEE DETAIL 4/A213.
5 BULKHEAD. SEE DETAIL 5/A213.
6 BULKHEAD. SEE DETAIL 6/A213.
7 BULKHEAD. SEE DETAIL 7/A213.
8 BULKHEAD. SEE DETAIL 8/A213.
9 ALIGN FINISH FACES.
10 PANEL JOINT, TYPICAL.
11 SEE DETAIL 9/A213.
12 ALIGN BOTTOM OF BULKHEAD TO TOP OF ADJACENT HORIZONTAL CONTROL JOINT
13 CEILING TILE AND GRID TO MATCH SHERWIN WILLIAMS SW7547 SANDBAR.

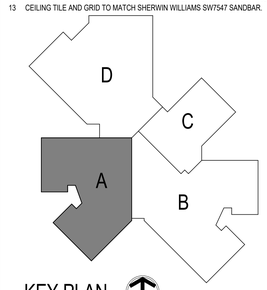

KEY PLAN

NORTH

BCSC TOGETHER WE LEARN

CSO
8831 Keystone Crossing, Indianapolis, IN 46240
317.848.7800 | csoinc.net

© 2025 CSO Architects, Inc. All Rights Reserved

Howeler+Yoon Architecture
617.517.4101 howeleryoon.com

PROJECT:
BARTHOLOMEW CONSOLIDATED SCHOOL CORPORATION
MAPLE GROVE ELEMENTARY
TIPTON LAKES BLVD, COLUMBUS, IN 47201

SCOPE DRAWINGS:
These drawings indicate the general scope of the project in terms of architectural design concept, the dimensions of the building, the general arrangement of spaces and the type of structural, mechanical and electrical systems.
The drawings do not necessarily indicate or describe all work required to the satisfactory completion and completion of the requirements of the Contract.
On the basis of the general scope indicated or described, the trade contractors shall furnish all items required for the proper execution and completion of the work.

REVISIONS:

1	ADDENDUM #1	06/10/2025
2	ADDENDUM #2	06/17/2025

ISSUE DATE	DRAWN BY	CHECKED BY
05/30/2025	LNM	ECN

DRAWING TITLE:
SECOND FLOOR REFLECTED CEILING PLAN - UNIT A

CERTIFIED BY:
JAMES R. LUX REGISTERED AR0900003 STATE OF INDIANA ARCHITECT

DRAWING NUMBER
A212A

PROJECT NUMBER
2024022

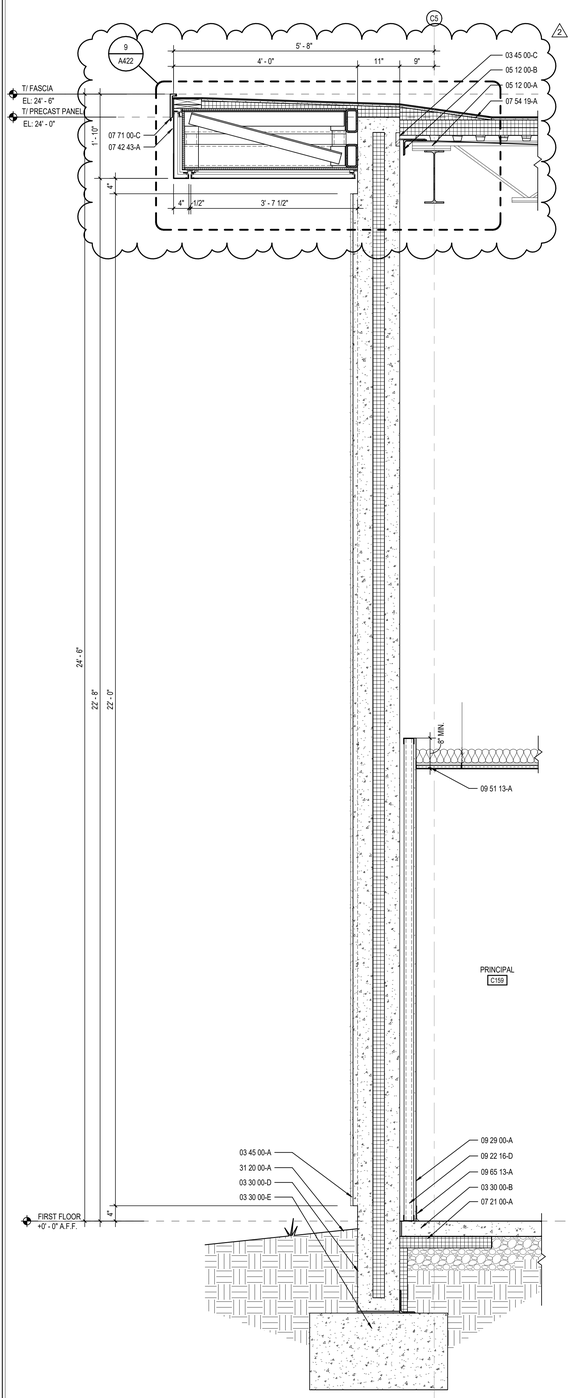

3 A404 EXTERIOR WALL SECTION
SCALE: 3/4" = 1'-0"

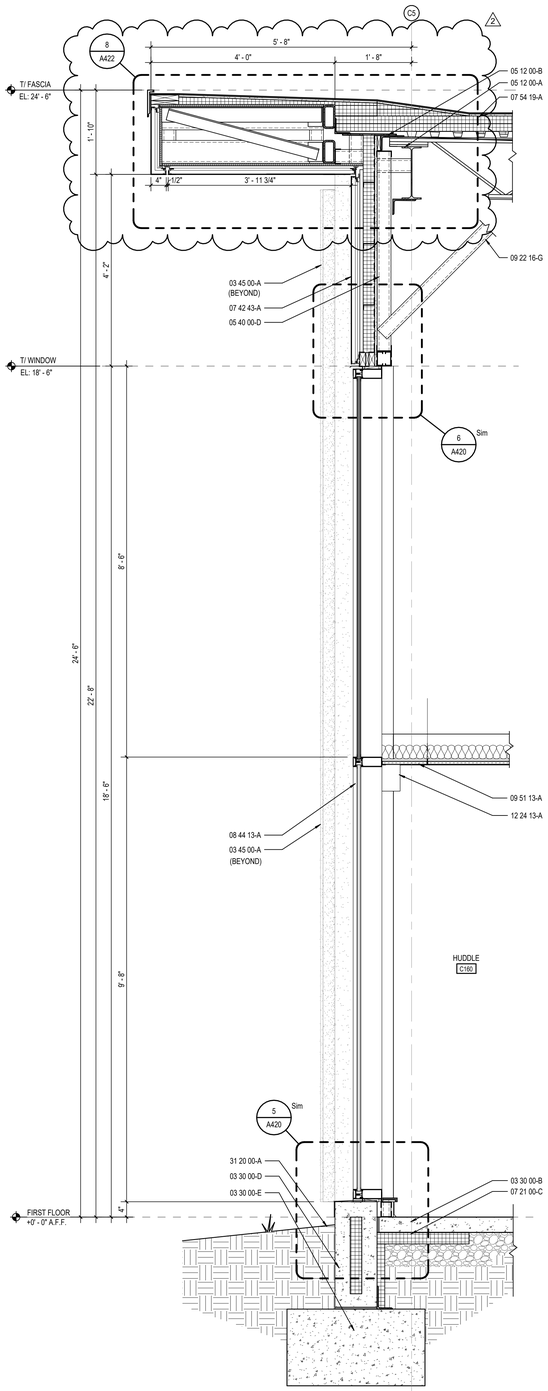

2 A404 EXTERIOR WALL SECTION
SCALE: 3/4" = 1'-0"

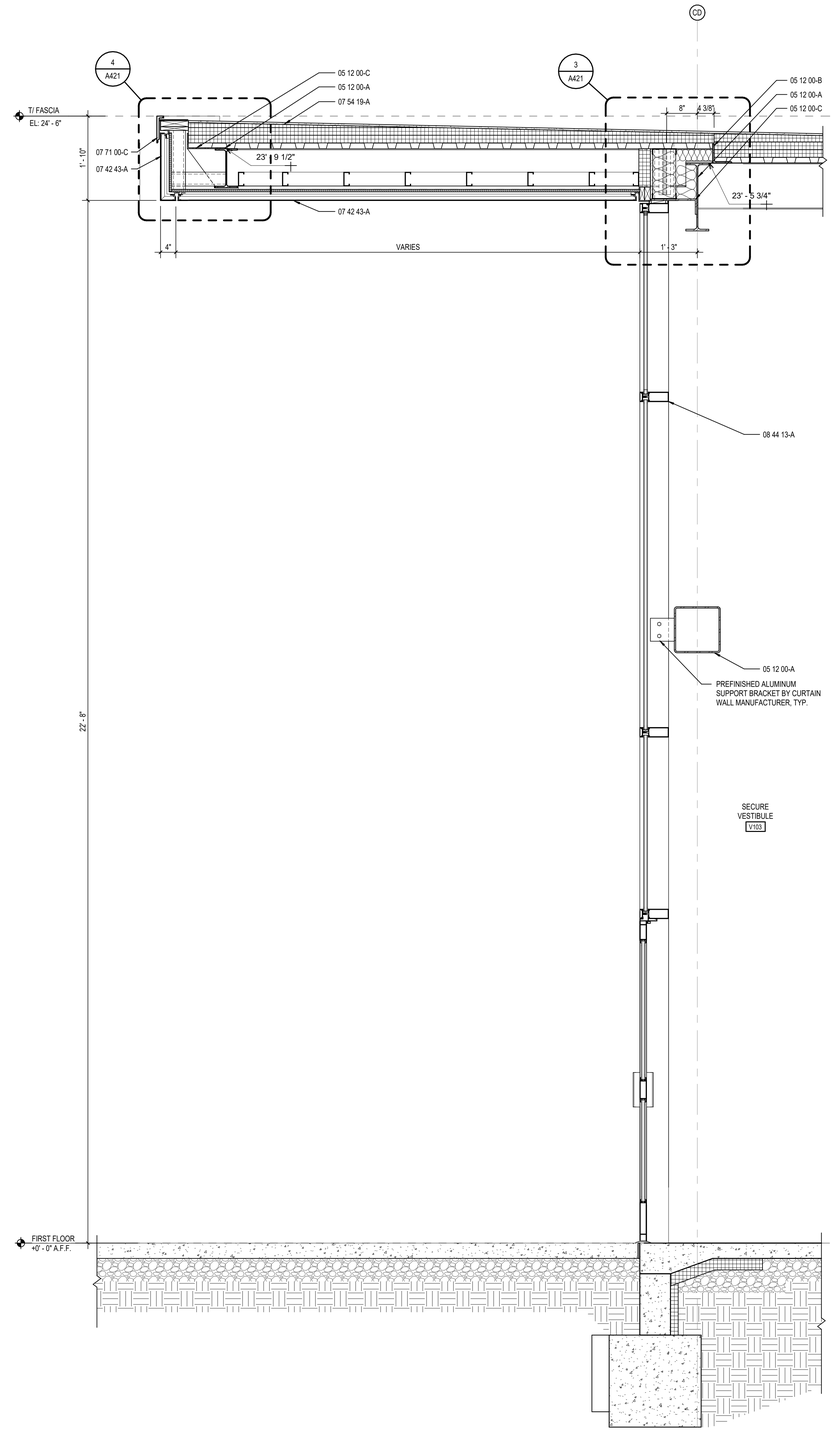

1 A404 EXTERIOR WALL SECTION
SCALE: 3/4" = 1'-0"

KEYNOTE LEGEND

03 30 00-A	WATERSTOP
03 30 00-B	CONCRETE SLAB OVER VAPOR BARRIER ON DRAINAGE FILL. SEE STRUCTURAL
03 30 00-C	CONCRETE SLAB ON METAL DECK- SEE STRUCTURAL
03 30 00-D	CONCRETE FOUNDATION- SEE STRUCTURAL
03 30 00-E	CONCRETE FOOTING- SEE STRUCTURAL
03 45 00-A	ARCHITECTURAL PRECAST CONCRETE PANEL
03 45 00-C	CONNECTION BY PRECAST SUPPLIER
04 20 00-A	GROUT CORE SOLID
04 20 00-C	CONCRETE MASONRY UNIT
04 20 00-D	BULLNOSE UNIT
04 20 00-F	BOND BEAM MASONRY UNIT
04 20 00-L	8" CONCRETE MASONRY UNIT
04 20 00-M	10" CONCRETE MASONRY UNIT
05 12 00-A	STRUCTURAL STEEL FRAMING MEMBER- SEE STRUCTURAL
05 12 00-B	STEEL ANGLE- SEE STRUCTURAL
05 12 00-C	STEEL BENT PLATE- SEE STRUCTURAL
05 12 00-D	STEEL TUBE- SEE STRUCTURAL
05 21 00-A	STEEL JOIST- SEE STRUCTURAL
05 21 00-B	STEEL JOIST GIRDER- SEE STRUCTURAL
05 31 00-A	METAL ROOF DECKING- SEE STRUCTURAL
05 31 00-B	METAL FLOOR DECKING- SEE STRUCTURAL
05 40 00-A	7/8 16 GA. FURRING (HAT) CHANNEL
05 40 00-D	3 5/8 GALVANIZED STEEL STUDS (16 GA. MIN.)
05 40 00-E	6 GALVANIZED STEEL STUDS (16 GA. MIN.)
05 40 00-K	DIAGONAL BRACING AS REQUIRED
05 50 00-A	MISCELLANEOUS STEEL - SEE STRUCTURAL
05 50 00-B	PRE-MANUFACTURED ALUMINUM ACCESS LADDER
05 50 00-C	PRE-MANUFACTURED ALUMINUM SHIPS LADDER
05 50 00-D	ELEVATOR HOIST BEAM- COORDINATE WITH ELEVATOR MANUFACTURER
05 51 13-A	MANUFACTURED STEEL FRAMED STAIR
05 51 13-B	METAL PAN TREAD AND RISER
05 51 13-C	CONCRETE FILLED METAL PAN TREAD AND RISER
05 51 13-D	CONCRETE FILLED METAL PAN LANDING
05 51 13-E	METAL STAIR STRINGER- CHANNEL
05 51 13-F	METAL TREAD PAN AND RISER
05 51 13-G	CLIP PLATE
05 51 13-H	SUPPORT COLUMN - BY STAIR MANUFACTURER
05 52 13-A	1-1/4" I.D. ANODIZED ALUMINUM HANDRAIL
05 73 00-A	42" HIGH GLASS GUARDRAIL SYSTEM
05 73 00-B	1 1/4" I.D. STAINLESS STEEL HANDRAIL
05 73 00-C	ALUMINUM BASE SHOE WITH STAINLESS STEEL CLADDING
05 73 00-D	STAINLESS STEEL GLASS CAP
05 73 00-E	WOOD CAP RAIL - PROFILE AS SHOWN IN DRAWINGS
05 73 00-F	48" HIGH GLASS GUARDRAIL SYSTEM
05 73 00-G	2" SQUARE BRUSHED STAINLESS STEEL CAP RAIL
06 10 00-C	2X WOOD BLOCKING
06 16 00-A	5/8" EXTERIOR GRADE PLYWOOD
06 16 00-B	3/4" EXTERIOR GRADE PLYWOOD
06 16 43-A	5/8" EXTERIOR GYPSUM SHEATHING
06 40 23-A	1X HARDWOOD STAIR RISER - STAIN TO MATCH DOORS
06 40 23-B	2X HARDWOOD STAIR TREAD - SEE DETAILS FOR NOSING PROFILE - STAIN TO MATCH DOORS
06 40 23-C	ANTI-SLIP STAIR INSERT
06 40 23-D	PLASTIC LAMINATE ON 3/4" PARTICLEBOARD
06 40 23-E	2X HARDWOOD CAP - STAIN TO MATCH DOORS
06 40 23-F	METAL WRAPPED WOOD BENCH
07 13 26-A	SELF-ADHERING SHEET WATERPROOFING
07 13 26-B	MOLDED SHEET DRAINAGE PANEL
07 13 26-C	PROTECTION COURSE
07 21 00-A	SLAB PERIMETER RIGID INSULATION (R-15 FOR 24" HOIZONTAL R-10 TO TOP OF FOOTING OR 48" MAX VERTICAL)
07 21 00-C	3" CAVITY WALL EXTRUDED POLYSTYRENE INSULATION (R-16.8)
07 21 00-D	MINERAL WOOL BATT INSULATION
07 21 00-E	THERMALLY BROKEN COMPOSITE Z-GIRT @ 16" O.C. COORDINATE DIRECTION WITH METAL PANEL MANUFACTURER
07 25 00-A	WEATHER RESISTIVE BARRIERS- BUILDING WRAP
07 27 26-A	FLUID APPLIED MEMBRANE AIR BARRIER
07 42 13-A	FORMED METAL WALL PANEL
07 42 13-B	BRAKE METAL FLASHING/TRIM
07 42 13-C	METAL HAT CHANNEL (16 GA. MIN.) - SEE SECTIONS FOR DEPTH
07 42 43-A	COMPOSITE METAL WALL/SOFFIT PANEL
07 42 43-B	BRAKE METAL TRIM/FLASHING - COLOR AS SELECTED BY ARCHITECT
07 42 43-C	METAL HAT CHANNEL (16 GA. MIN.) - SEE SECTIONS FOR DEPTH
07 54 19-A	POLYVINYL CHLORIDE (PVC) MEMBRANE ROOFING SYSTEM
07 54 19-B	MEMBRANE ROOFING - EXTEND OVER AND ATTACH TO FRONT FACE OF PARAPET
07 54 19-C	1/2" COVER BOARD
07 54 19-D	TAPERED POLYISO INSULATION BOARD
07 54 19-E	2 LAYERS OF 2" POLYISO INSULATION BOARD (R-22.8)
07 54 19-F	2" POLYISO INSULATION BOARD (R-13)
07 62 00-A	TERMINATION BAR
07 71 00-A	MANUFACTURED COPING
07 71 00-B	MANUFACTURED DRIP EDGE / GRAVEL STOP
07 71 00-C	MANUFACTURED ROOF FASCIA
07 71 00-D	MANUFACTURED 2-PIECE COUNTERFLASHING SYSTEM
07 72 00-A	ROOF HATCH
07 76 00-A	PORCELAIN ROOF PAVERS ON ADJUSTABLE PEDESTALS
07 92 00-A	SEALANT
07 92 00-B	SEALANT EACH SIDE, TYPICAL
07 92 00-C	BACKER ROD AND SEALANT
07 92 00-D	BACKER ROD AND SEALANT EACH SIDE, TYPICAL
08 11 13-A	HOLLOW METAL DOOR/BORROWED LIGHT FRAME
08 11 13-B	GROUT SOLID
08 33 13-A	OVERHEAD COILING COUNTER DOOR
08 41 13-A	4 1/2" ALUMINUM-FRAMED STOREFRONT
08 41 13-B	WIDE STYLE ALUMINUM ENTRANCE DOOR
08 41 13-D	ALUMINUM BRAKE METAL FLASHING/TRIM TO MATCH STOREFRONT FRAME
08 41 13-E	2 1/2" X 2 1/2" ALUMINUM ANGLE CLOSURE. COLOR TO MATCH STOREFRONT
08 44 13-A	7 1/2" DEEP ALUMINUM CURTAINWALL SYSTEM
08 44 13-D	ALUMINUM BREAKMETAL FLASHING/TRIM TO MATCH CURTAINWALL FRAME
08 44 13-E	PRESSURE PLATE WITH MULLION CAP
08 80 00-A	GLAZING - SEE SCHEDULE/ELEVATIONS
09 22 16-D	2 1/2" STEEL STUD
09 22 16-E	3 5/8" STEEL STUD
09 22 16-F	6" STEEL STUD
09 22 16-G	METAL STUD KICKERS AS REQUIRED
09 29 00-A	5/8" GYPSUM WALL BOARD (SEE SPECS FOR TYPE)
09 29 00-C	SOUND ATTENUATION INSULATION
09 29 00-D	SUSPENDED GYPSUM BOARD CEILING ASSEMBLY
09 29 00-F	EXTRUDED ALUMINUM DRYWALL L-TRIM
09 29 00-G	EXTRUDED ALUMINUM 3/8" WIDE DRYWALL REVEAL
09 30 00-A	CERAMIC TILE
09 51 13-A	ACOUSTICAL CEILING SUSPENSION ASSEMBLY
09 54 26-A	WOOD GRILLE CEILING
09 64 66-A	WOOD ATHLETIC FLOORING SYSTEM
09 65 13-A	RESILIENT BASE
09 65 13-B	RESILIENT STAIR TREADS & RISERS
12 24 13-A	ROLLER WINDOW SHADES- SEE EQUIPMENT SCHEDULE
12 36 61-B	SOLID SURFACE
14 24 00-A	HYDRAULIC MRL ELEVATOR
14 24 00-B	ELEVATOR DOOR AND FRAME
14 24 00-C	PIT LADDER
14 24 00-D	ELEVATOR SILL
31 20 00-A	FINISH GRADE- SEE CIVIL SHEETS
31 20 00-B	COMPACTED EARTH
31 20 00-C	DRAINING GRANULAR FILL
32 13 13-A	SIDEWALK- SEE CIVIL SHEETS

BCSC
TOGETHER WE LEARN

CSO
8831 Keystone Crossing, Indianapolis, IN 46240
317.848.7800 | csoinc.net

© 2025 CSO Architects, Inc. All Rights Reserved

Howeler+Yoon Architecture
617.517.4101 howeleryoon.com

PROJECT:
BARTHOLOMEW CONSOLIDATED SCHOOL CORPORATION
MAPLE GROVE ELEMENTARY
TIPTON LAKES BLVD, COLUMBUS, IN 47201

SCOPE DRAWINGS:
These drawings indicate the general scope of the project in terms of architectural design concept, the dimensions of the building, the general construction materials and the type of structural, mechanical and electrical systems.
The drawings do not necessarily indicate or describe all items required for the complete execution and completion of the requirements of the Contract.
On the basis of the general scope indicated or described, the trade contractors shall furnish all items required for the proper execution and completion of the work.

REVISIONS:

2	ADDENDUM #2	06/17/2025

ISSUE DATE	DRAWN BY	CHECKED BY
05/30/2025	JSW	ECN

DRAWING TITLE:
WALL SECTIONS

CERTIFIED BY:
JAMES R. FUNK
REGISTERED
AR0900003
STATE OF
INDIANA
ARCHITECT

DRAWING NUMBER
A404

PROJECT NUMBER
2024022

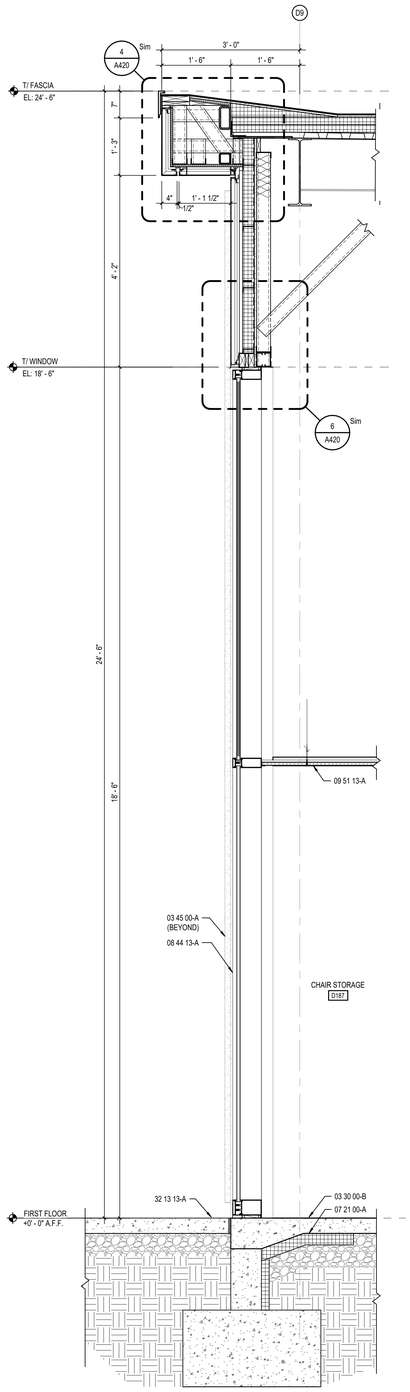

4 A405 EXTERIOR WALL SECTION
SCALE: 3/4" = 1'-0"

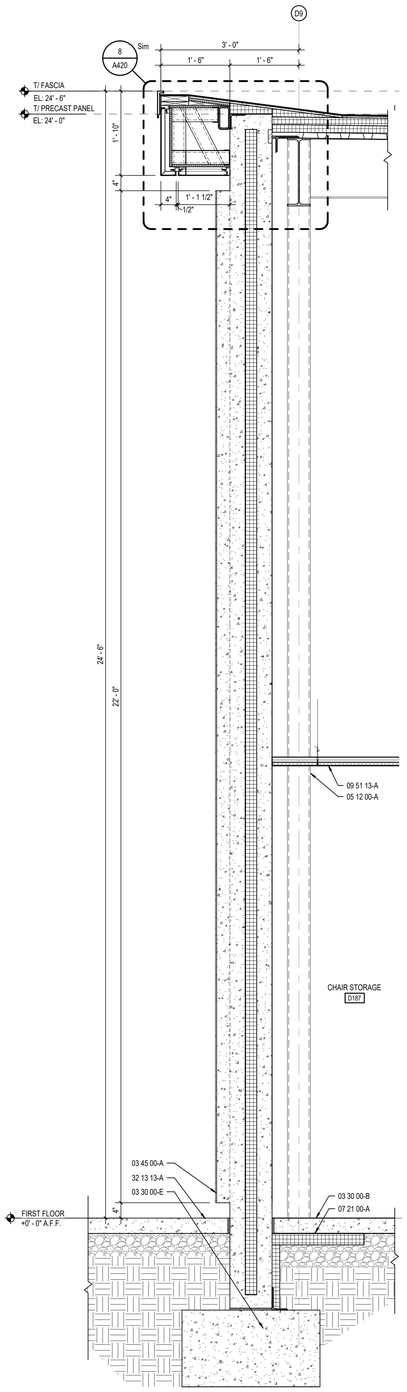

3 A405 EXTERIOR WALL SECTION
SCALE: 3/4" = 1'-0"

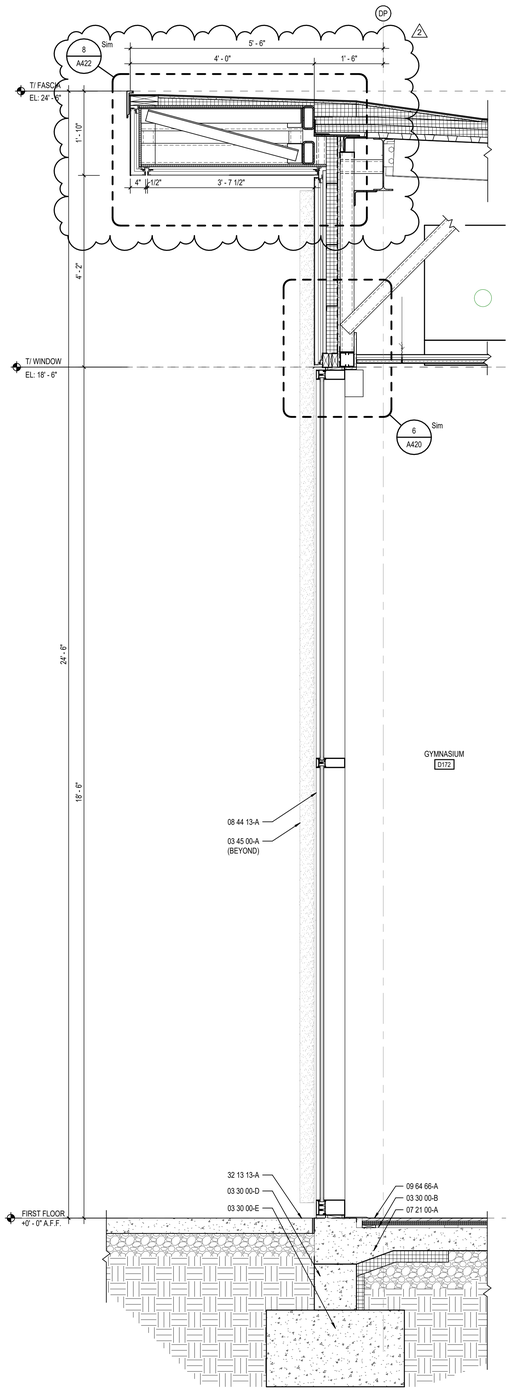

2 A405 EXTERIOR WALL SECTION
SCALE: 3/4" = 1'-0"

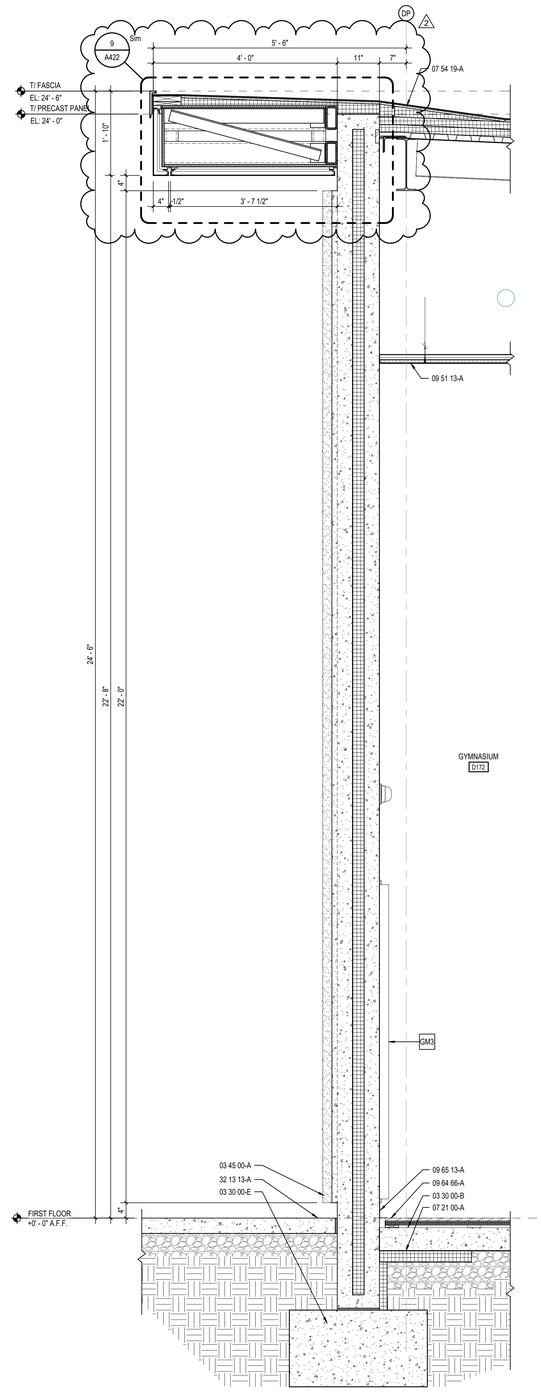

1 A405 EXTERIOR WALL SECTION
SCALE: 3/4" = 1'-0"

KEYNOTE LEGEND

03 30 00-A	WATERSTOP
03 30 00-B	CONCRETE SLAB OVER VAPOR BARRIER ON DRAINAGE FILL. SEE STRUCTURAL
03 30 00-C	CONCRETE SLAB ON METAL DECK- SEE STRUCTURAL
03 30 00-D	CONCRETE FOUNDATION- SEE STRUCTURAL
03 30 00-E	CONCRETE FOOTING- SEE STRUCTURAL
03 45 00-A	ARCHITECTURAL PRECAST CONCRETE PANEL
03 45 00-C	CONNECTION BY PRECAST SUPPLIER
04 20 00-A	GROUT CORE SOLID
04 20 00-C	CONCRETE MASONRY UNIT
04 20 00-D	BULLNOSE UNIT
04 20 00-F	BOND BEAM MASONRY UNIT
04 20 00-L	8" CONCRETE MASONRY UNIT
04 20 00-M	10" CONCRETE MASONRY UNIT
05 12 00-A	STRUCTURAL STEEL FRAMING MEMBER- SEE STRUCTURAL
05 12 00-B	STEEL ANGLE- SEE STRUCTURAL
05 12 00-C	STEEL BENT PLATE- SEE STRUCTURAL
05 12 00-D	STEEL TUBE- SEE STRUCTURAL
05 21 00-A	STEEL JOIST- SEE STRUCTURAL
05 21 00-B	STEEL JOIST GIRDER- SEE STRUCTURAL
05 31 00-A	METAL ROOF DECKING- SEE STRUCTURAL
05 31 00-B	METAL FLOOR DECKING- SEE STRUCTURAL
05 40 00-A	7/8 16 GA. FURRING (HAT) CHANNEL
05 40 00-D	3 5/8 GALVANIZED STEEL STUDS (16 GA. MIN.)
05 40 00-E	6 GALVANIZED STEEL STUDS (16 GA. MIN.)
05 40 00-K	DIAGONAL BRACING AS REQUIRED
05 50 00-A	MISCELLANEOUS STEEL - SEE STRUCTURAL
05 50 00-B	PRE-MANUFACTURED ALUMINUM ACCESS LADDER
05 50 00-C	PRE-MANUFACTURED ALUMINUM SHIPS LADDER
05 50 00-D	ELEVATOR HOIST BEAM- COORDINATE WITH ELEVATOR MANUFACTURER
05 51 13-A	MANUFACTURED STEEL FRAMED STAIR
05 51 13-B	METAL PAN TREAD AND RISER
05 51 13-C	CONCRETE FILLED METAL PAN TREAD AND RISER
05 51 13-D	CONCRETE FILLED METAL PAN LANDING
05 51 13-E	METAL STAIR STRINGER- CHANNEL
05 51 13-F	METAL TREAD PAN AND RISER
05 51 13-G	CLIP PLATE
05 51 13-H	SUPPORT COLUMN - BY STAIR MANUFACTURER
05 52 13-A	1-1/4" I.D. ANODIZED ALUMINUM HANDRAIL
05 73 00-A	42" HIGH GLASS GUARDRAIL SYSTEM
05 73 00-B	1 1/4" I.D. STAINLESS STEEL HANDRAIL
05 73 00-C	ALUMINUM BASE SHOE WITH STAINLESS STEEL CLADDING
05 73 00-D	STAINLESS STEEL GLASS CAP
05 73 00-E	WOOD CAP RAIL - PROFILE AS SHOWN IN DRAWINGS
05 73 00-F	48" HIGH GLASS GUARDRAIL SYSTEM
05 73 00-G	2" SQUARE BRUSHED STAINLESS STEEL CAP RAIL
06 10 00-C	2X WOOD BLOCKING
06 16 00-A	5/8" EXTERIOR GRADE PLYWOOD
06 16 00-B	3/4" EXTERIOR GRADE PLYWOOD
06 16 43-A	5/8" EXTERIOR GYPSUM SHEATHING
06 40 23-A	1X HARDWOOD STAIR RISER - STAIN TO MATCH DOORS
06 40 23-B	2X HARDWOOD STAIR TREAD - SEE DETAILS FOR NOSING PROFILE - STAIN TO MATCH DOORS
06 40 23-C	ANTI-SLIP STAIR INSERT
06 40 23-D	PLASTIC LAMINATE ON 3/4" PARTICLEBOARD
06 40 23-E	2X HARDWOOD CAP - STAIN TO MATCH DOORS
06 40 23-F	METAL WRAPPED WOOD BENCH
07 13 26-A	SELF-ADHERING SHEET WATERPROOFING
07 13 26-B	MOLDED SHEET DRAINAGE PANEL
07 13 26-C	PROTECTION COURSE
07 21 00-A	SLAB PERIMETER RIGID INSULATION (R-15 FOR 24" HOIZONTAL R-10 TO TOP OF FOOTING OR 48" MAX VERTICAL)
07 21 00-C	3" CAVITY WALL EXTRUDED POLYSTYRENE INSULATION (R-16.8)
07 21 00-D	MINERAL WOOL BATT INSULATION
07 21 00-E	THERMALLY BROKEN COMPOSITE Z-GIRT @ 16" O.C. COORDINATE DIRECTION WITH METAL PANEL MANUFACTURER
07 25 00-A	WEATHER RESISTIVE BARRIERS- BUILDING WRAP
07 27 26-A	FLUID APPLIED MEMBRANE AIR BARRIER
07 42 13-A	FORMED METAL WALL PANEL
07 42 13-B	BRAKE METAL FLASHING/TRIM
07 42 13-C	METAL HAT CHANNEL (16 GA. MIN.) - SEE SECTIONS FOR DEPTH
07 42 43-A	COMPOSITE METAL WALL/SOFFIT PANEL
07 42 43-B	BRAKE METAL TRIM/FLASHING - COLOR AS SELECTED BY ARCHITECT
07 42 43-C	METAL HAT CHANNEL (16 GA. MIN.) - SEE SECTIONS FOR DEPTH
07 54 19-A	POLYVINYL CHLORIDE (PVC) MEMBRANE ROOFING SYSTEM
07 54 19-B	MEMBRANE ROOFING - EXTEND OVER AND ATTACH TO FRONT FACE OF PARAPET
07 54 19-C	1/2" COVER BOARD
07 54 19-D	TAPERED POLYISO INSULATION BOARD
07 54 19-E	2 LAYERS OF 2" POLYISO INSULATION BOARD (R-22.8)
07 54 19-F	2" POLYISO INSULATION BOARD (R-13)
07 62 00-A	TERMINATION BAR
07 71 00-A	MANUFACTURED COPING
07 71 00-B	MANUFACTURED DRIP EDGE / GRAVEL STOP
07 71 00-C	MANUFACTURED ROOF FASCIA
07 71 00-D	MANUFACTURED 2-PIECE COUNTERFLASHING SYSTEM
07 72 00-A	ROOF HATCH
07 76 00-A	PORCELAIN ROOF PAVERS ON ADJUSTABLE PEDESTALS
07 92 00-A	SEALANT
07 92 00-B	SEALANT EACH SIDE, TYPICAL
07 92 00-C	BACKER ROD AND SEALANT
07 92 00-D	BACKER ROD AND SEALANT EACH SIDE, TYPICAL
08 11 13-A	HOLLOW METAL DOOR/BORROWED LIGHT FRAME
08 11 13-B	GROUT SOLID
08 33 13-A	OVERHEAD COILING COUNTER DOOR
08 41 13-A	4 1/2" ALUMINUM-FRAMED STOREFRONT
08 41 13-B	WIDE STYLE ALUMINUM ENTRANCE DOOR
08 41 13-D	ALUMINUM BRAKE METAL FLASHING/TRIM TO MATCH STOREFRONT FRAME
08 41 13-E	2 1/2" X 2 1/2" ALUMINUM ANGLE CLOSURE. COLOR TO MATCH STOREFRONT
08 44 13-A	7 1/2" DEEP ALUMINUM CURTAINWALL SYSTEM
08 44 13-D	ALUMINUM BREAKMETAL FLASHING/TRIM TO MATCH CURTAINWALL FRAME
08 44 13-E	PRESSURE PLATE WITH MULLION CAP
08 80 00-A	GLAZING - SEE SCHEDULE/ELEVATIONS
09 22 16-D	2 1/2" STEEL STUD
09 22 16-E	3 5/8" STEEL STUD
09 22 16-F	6" STEEL STUD
09 22 16-G	METAL STUD KICKERS AS REQUIRED
09 29 00-A	5/8" GYPSUM WALL BOARD (SEE SPECS FOR TYPE)
09 29 00-C	SOUND ATTENUATION INSULATION
09 29 00-D	SUSPENDED GYPSUM BOARD CEILING ASSEMBLY
09 29 00-F	EXTRUDED ALUMINUM DRYWALL L-TRIM
09 29 00-G	EXTRUDED ALUMINUM 3/8" WIDE DRYWALL REVEAL
09 30 00-A	CERAMIC TILE
09 51 13-A	ACOUSTICAL CEILING SUSPENSION ASSEMBLY
09 54 26-A	WOOD GRILLE CEILING
09 64 66-A	WOOD ATHLETIC FLOORING SYSTEM
09 65 13-A	RESILIENT BASE
09 65 13-B	RESILIENT STAIR TREADS & RISERS
12 24 13-A	ROLLER WINDOW SHADES- SEE EQUIPMENT SCHEDULE
12 36 61-B	SOLID SURFACE
14 24 00-A	HYDRAULIC MRL ELEVATOR
14 24 00-B	ELEVATOR DOOR AND FRAME
14 24 00-C	PIT LADDER
14 24 00-D	ELEVATOR SILL
31 20 00-A	FINISH GRADE- SEE CIVIL SHEETS
31 20 00-B	COMPACTED EARTH
31 20 00-C	DRAINING GRANULAR FILL
32 13 13-A	SIDEWALK- SEE CIVIL SHEETS

BCSC
TOGETHER WE LEARN

CSO
8831 Keystone Crossing, Indianapolis, IN 46240
317.848.7800 | csoinc.net

© 2025 CSO Architects, Inc. All Rights Reserved

Howeler+Yoon Architecture
617.517.4101 howeleryoon.com

PROJECT:
BARTHOLOMEW CONSOLIDATED SCHOOL CORPORATION
MAPLE GROVE ELEMENTARY
TIPTON LAKES BLVD, COLUMBUS, IN 47201

SCOPE DRAWINGS:
These drawings indicate the general scope of the project in terms of architectural design concept, the dimensions of the building, the general construction materials and the type of structural, mechanical and electrical systems.
The drawings do not necessarily indicate or describe all work required for the complete performance and completion of the requirements of the Contract.
On the basis of the general scope indicated or described, the trade contractors shall furnish all items required for the proper execution and completion of the work.

REVISIONS:

2	ADDENDUM #2	06/17/2025

ISSUE DATE	DRAWN BY	CHECKED BY
05/30/2025	LNM	ECN

DRAWING TITLE:
WALL SECTIONS

CERTIFIED BY:
JAMES R. FUNK
REGISTERED
AR0900003
STATE OF
INDIANA
ARCHITECT

DRAWING NUMBER
A405

PROJECT NUMBER
2024022

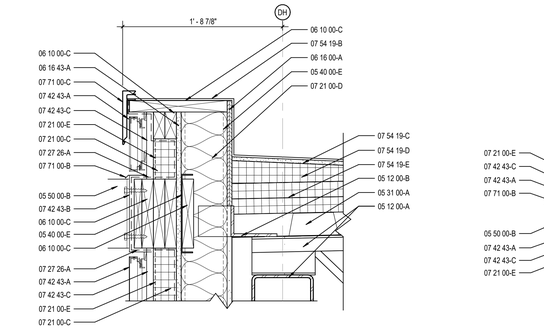

15 A420 ENLARGED SECTION DETAIL
SCALE: 1 1/2" = 1'-0"

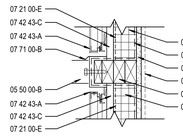

14 A420 ENLARGED SECTION DETAIL
SCALE: 1 1/2" = 1'-0"

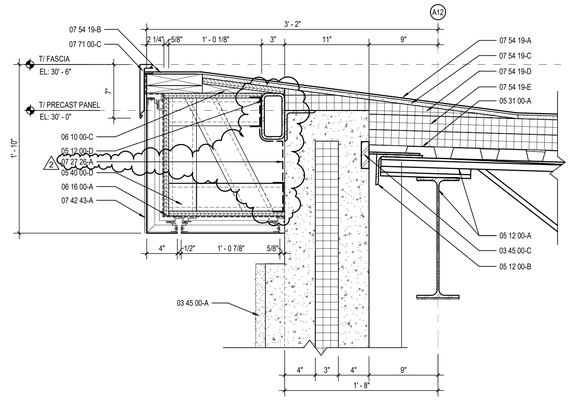

8 A420 ENLARGED SECTION DETAIL
SCALE: 1 1/2" = 1'-0"

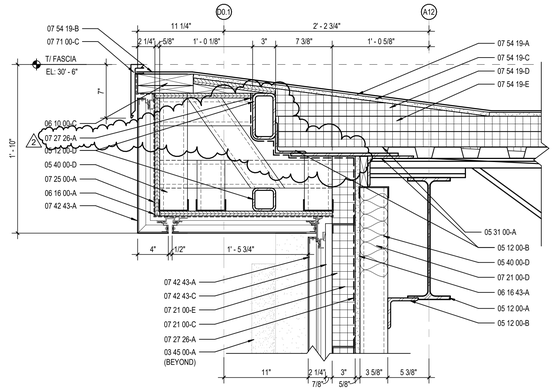

4 A420 ENLARGED SECTION DETAIL
SCALE: 1 1/2" = 1'-0"

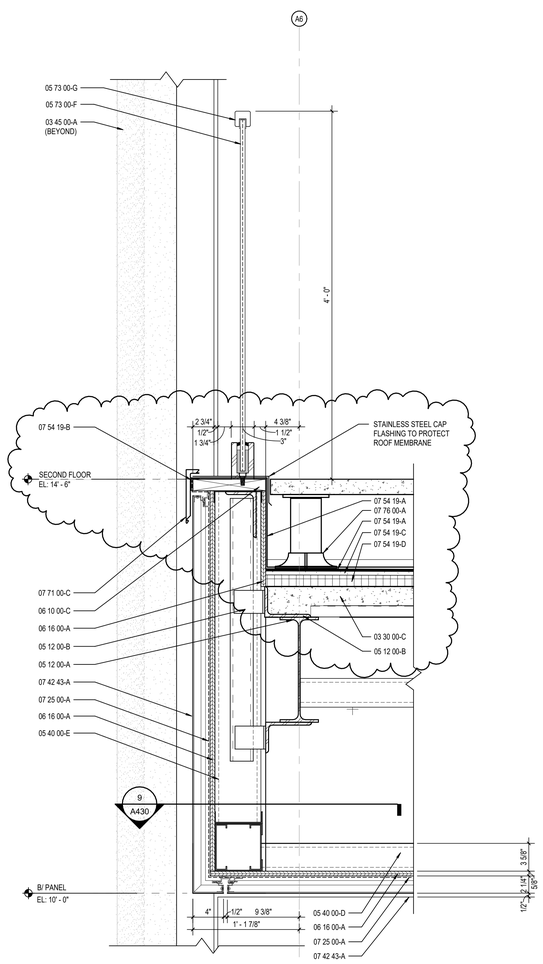

13 A420 ENLARGED SECTION DETAIL
SCALE: 1 1/2" = 1'-0"

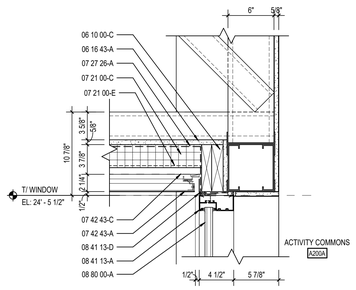

11 A420 ENLARGED SECTION DETAIL
SCALE: 1 1/2" = 1'-0"

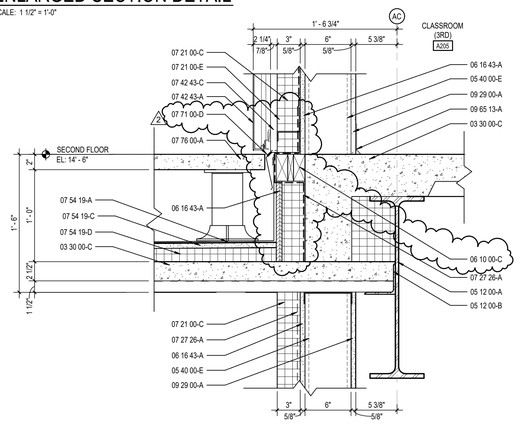

7 A420 ENLARGED SECTION DETAIL
SCALE: 1 1/2" = 1'-0"

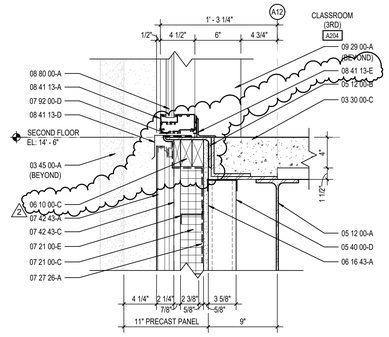

3 A420 ENLARGED SECTION DETAIL
SCALE: 1 1/2" = 1'-0"

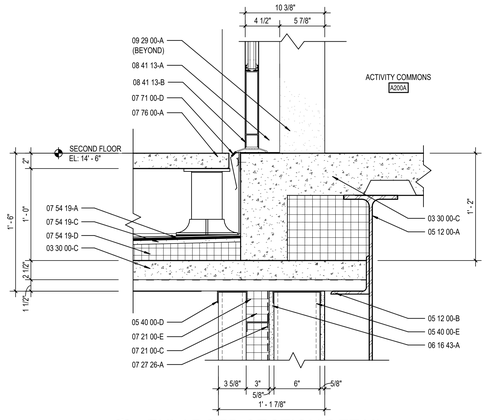

10 A420 ENLARGED SECTION DETAIL
SCALE: 1 1/2" = 1'-0"

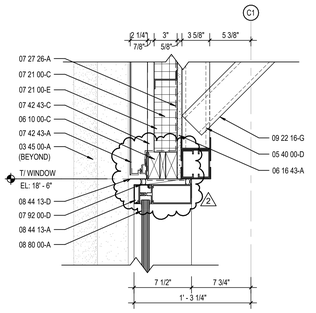

6 A420 ENLARGED SECTION DETAIL
SCALE: 1 1/2" = 1'-0"

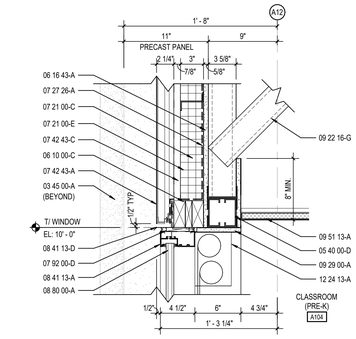

2 A420 ENLARGED SECTION DETAIL
SCALE: 1 1/2" = 1'-0"

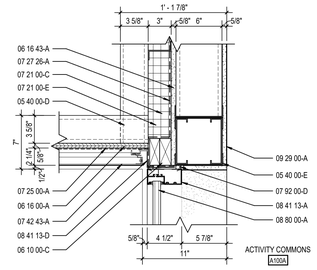

9 A420 ENLARGED SECTION DETAIL
SCALE: 1 1/2" = 1'-0"

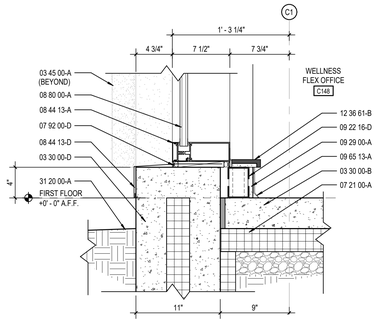

5 A420 ENLARGED SECTION DETAIL
SCALE: 1 1/2" = 1'-0"

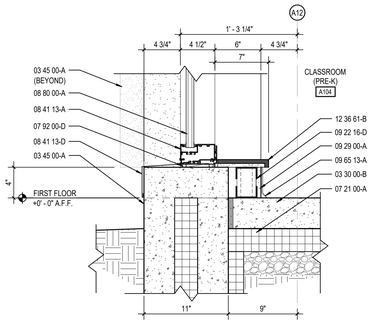

1 A420 ENLARGED SECTION DETAIL
SCALE: 1 1/2" = 1'-0"

KEYNOTE LEGEND

03 30 00-A	WATERSTOP
03 30 00-B	CONCRETE SLAB OVER VAPOR BARRIER ON DRAINAGE FILL. SEE STRUCTURAL
03 30 00-C	CONCRETE SLAB ON METAL DECK- SEE STRUCTURAL
03 30 00-D	CONCRETE FOUNDATION- SEE STRUCTURAL
03 30 00-E	CONCRETE FOOTING- SEE STRUCTURAL
03 45 00-A	ARCHITECTURAL PRECAST CONCRETE PANEL
03 45 00-C	CONNECTION BY PRECAST SUPPLIER
04 20 00-A	GROUT CORE SOLID
04 20 00-C	CONCRETE MASONRY UNIT
04 20 00-D	BULLNOSE UNIT
04 20 00-F	BOND BEAM MASONRY UNIT
04 20 00-L	8" CONCRETE MASONRY UNIT
04 20 00-M	10" CONCRETE MASONRY UNIT
05 12 00-A	STRUCTURAL STEEL FRAMING MEMBER- SEE STRUCTURAL
05 12 00-B	STEEL ANGLE- SEE STRUCTURAL
05 12 00-C	STEEL BENT PLATE- SEE STRUCTURAL
05 12 00-D	STEEL TUBE- SEE STRUCTURAL
05 21 00-A	STEEL JOIST- SEE STRUCTURAL
05 21 00-B	STEEL JOIST GIRDER- SEE STRUCTURAL
05 31 00-A	METAL ROOF DECKING- SEE STRUCTURAL
05 31 00-B	METAL FLOOR DECKING- SEE STRUCTURAL
05 40 00-A	7/8 16 GA. FURRING (HAT) CHANNEL
05 40 00-D	3 5/8 GALVANIZED STEEL STUDS (16 GA. MIN.)
05 40 00-E	6 GALVANIZED STEEL STUDS (16 GA. MIN.)
05 40 00-K	DIAGONAL BRACING AS REQUIRED
05 50 00-A	MISCELLANEOUS STEEL - SEE STRUCTURAL
05 50 00-B	PRE-MANUFACTURED ALUMINUM ACCESS LADDER
05 50 00-C	PRE-MANUFACTURED ALUMINUM SHIPS LADDER
05 50 00-D	ELEVATOR HOIST BEAM- COORDINATE WITH ELEVATOR MANUFACTURER
05 51 13-A	MANUFACTURED STEEL FRAMED STAIR
05 51 13-B	METAL PAN TREAD AND RISER
05 51 13-C	CONCRETE FILLED METAL PAN TREAD AND RISER
05 51 13-D	CONCRETE FILLED METAL PAN LANDING
05 51 13-E	METAL STAIR STRINGER- CHANNEL
05 51 13-F	METAL TREAD PAN AND RISER
05 51 13-G	CLIP PLATE
05 51 13-H	SUPPORT COLUMN - BY STAIR MANUFACTURER
05 52 13-A	1-1/4" I.D. ANODIZED ALUMINUM HANDRAIL
05 73 00-A	42" HIGH GLASS GUARDRAIL SYSTEM
05 73 00-B	1 1/4" I.D. STAINLESS STEEL HANDRAIL
05 73 00-C	ALUMINUM BASE SHOE WITH STAINLESS STEEL CLADDING
05 73 00-D	STAINLESS STEEL GLASS CAP
05 73 00-E	WOOD CAP RAIL - PROFILE AS SHOWN IN DRAWINGS
05 73 00-F	48" HIGH GLASS GUARDRAIL SYSTEM
05 73 00-G	2" SQUARE BRUSHED STAINLESS STEEL CAP RAIL
06 10 00-C	2X WOOD BLOCKING
06 16 00-A	5/8" EXTERIOR GRADE PLYWOOD
06 16 00-B	3/4" EXTERIOR GRADE PLYWOOD
06 16 43-A	5/8" EXTERIOR GYPSUM SHEATHING
06 40 23-A	1X HARDWOOD STAIR RISER - STAIN TO MATCH DOORS
06 40 23-B	2X HARDWOOD STAIR TREAD - SEE DETAILS FOR NOSING PROFILE - STAIN TO MATCH DOORS
06 40 23-C	ANTI-SLIP STAIR INSERT
06 40 23-D	PLASTIC LAMINATE ON 3/4" PARTICLEBOARD
06 40 23-E	2X HARDWOOD CAP - STAIN TO MATCH DOORS
06 40 23-F	METAL WRAPPED WOOD BENCH
07 13 26-A	SELF-ADHERING SHEET WATERPROOFING
07 13 26-B	MOLDED SHEET DRAINAGE PANEL
07 13 26-C	PROTECTION COURSE
07 21 00-A	SLAB PERIMETER RIGID INSULATION (R-15 FOR 24" HOIZONTAL R-10 TO TOP OF FOOTING OR 48" MAX VERTICAL)
07 21 00-C	3" CAVITY WALL EXTRUDED POLYSTYRENE INSULATION (R-16.8)
07 21 00-D	MINERAL WOOL BATT INSULATION
07 21 00-E	THERMALLY BROKEN COMPOSITE Z-GIRT @ 16" O.C. COORDINATE DIRECTION WITH METAL PANEL MANUFACTURER
07 25 00-A	WEATHER RESISTIVE BARRIERS- BUILDING WRAP
07 27 26-A	FLUID APPLIED MEMBRANE AIR BARRIER
07 42 13-A	FORMED METAL WALL PANEL
07 42 13-B	BRAKE METAL FLASHING/TRIM
07 42 13-C	METAL HAT CHANNEL (16 GA. MIN.) - SEE SECTIONS FOR DEPTH
07 42 43-A	COMPOSITE METAL WALL/SOFFIT PANEL
07 42 43-B	BRAKE METAL TRIM/FLASHING - COLOR AS SELECTED BY ARCHITECT
07 42 43-C	METAL HAT CHANNEL (16 GA. MIN.) - SEE SECTIONS FOR DEPTH
07 54 19-A	POLYVINYL CHLORIDE (PVC) MEMBRANE ROOFING SYSTEM
07 54 19-B	MEMBRANE ROOFING - EXTEND OVER AND ATTACH TO FRONT FACE OF PARAPET
07 54 19-C	1/2" COVER BOARD
07 54 19-D	TAPERED POLYISO INSULATION BOARD
07 54 19-E	2 LAYERS OF 2" POLYISO INSULATION BOARD (R-22.8)
07 54 19-F	2" POLYISO INSULATION BOARD (R-13)
07 62 00-A	TERMINATION BAR
07 71 00-A	MANUFACTURED COPING
07 71 00-B	MANUFACTURED DRIP EDGE / GRAVEL STOP
07 71 00-C	MANUFACTURED ROOF FASCIA
07 71 00-D	MANUFACTURED 2-PIECE COUNTERFLASHING SYSTEM
07 72 00-A	ROOF HATCH
07 76 00-A	PORCELAIN ROOF PAVERS ON ADJUSTABLE PEDESTALS
07 92 00-A	SEALANT
07 92 00-B	SEALANT EACH SIDE, TYPICAL
07 92 00-C	BACKER ROD AND SEALANT
07 92 00-D	BACKER ROD AND SEALANT EACH SIDE, TYPICAL
08 11 13-A	HOLLOW METAL DOOR/BORROWED LIGHT FRAME
08 11 13-B	GROUT SOLID
08 33 13-A	OVERHEAD COILING COUNTER DOOR
08 41 13-A	4 1/2" ALUMINUM-FRAMED STOREFRONT
08 41 13-B	WIDE STYLE ALUMINUM ENTRANCE DOOR
08 41 13-D	ALUMINUM BRAKE METAL FLASHING/TRIM TO MATCH STOREFRONT FRAME
08 41 13-E	2 1/2" X 2 1/2" ALUMINUM ANGLE CLOSURE. COLOR TO MATCH STOREFRONT
08 44 13-A	7 1/2" DEEP ALUMINUM CURTAINWALL SYSTEM
08 44 13-D	ALUMINUM BREAKMETAL FLASHING/TRIM TO MATCH CURTAINWALL FRAME
08 44 13-E	PRESSURE PLATE WITH MULLION CAP
08 80 00-A	GLAZING - SEE SCHEDULE/ELEVATIONS
09 22 16-D	2 1/2" STEEL STUD
09 22 16-E	3 5/8" STEEL STUD
09 22 16-F	6" STEEL STUD
09 22 16-G	METAL STUD KICKERS AS REQUIRED
09 29 00-A	5/8" GYPSUM WALL BOARD (SEE SPECS FOR TYPE)
09 29 00-C	SOUND ATTENUATION INSULATION
09 29 00-D	SUSPENDED GYPSUM BOARD CEILING ASSEMBLY
09 29 00-F	EXTRUDED ALUMINUM DRYWALL L-TRIM
09 29 00-G	EXTRUDED ALUMINUM 3/8" WIDE DRYWALL REVEAL
09 30 00-A	CERAMIC TILE
09 51 13-A	ACOUSTICAL CEILING SUSPENSION ASSEMBLY
09 54 26-A	WOOD GRILLE CEILING
09 64 66-A	WOOD ATHLETIC FLOORING SYSTEM
09 65 13-A	RESILIENT BASE
09 65 13-B	RESILIENT STAIR TREADS & RISERS
12 24 13-A	ROLLER WINDOW SHADES- SEE EQUIPMENT SCHEDULE
12 36 61-B	SOLID SURFACE
14 24 00-A	HYDRAULIC MRL ELEVATOR
14 24 00-B	ELEVATOR DOOR AND FRAME
14 24 00-C	PIT LADDER
14 24 00-D	ELEVATOR SILL
31 20 00-A	FINISH GRADE- SEE CIVIL SHEETS
31 20 00-B	COMPACTED EARTH
31 20 00-C	DRAINING GRANULAR FILL
32 13 13-A	SIDEWALK- SEE CIVIL SHEETS

BCSC TOGETHER WE LEARN

CSO
8831 Keystone Crossing, Indianapolis, IN 46240
317.848.7800 | csoinc.net

© 2025 CSO Architects, Inc. All Rights Reserved

Howeler+Yoon Architecture
617.517.4101 howeleryoon.com

PROJECT:
BARTHOLOMEW CONSOLIDATED SCHOOL CORPORATION
MAPLE GROVE ELEMENTARY
TIPTON LAKES BLVD, COLUMBUS, IN 47201

SCOPE DRAWINGS:
These drawings indicate the general scope of the project in terms of architectural design concept; the dimensions of the building, the major architectural elements and the type of structural, mechanical and electrical systems. The Contract Documents supplement these drawings to describe all work required for full performance and completion of the requirements of the Contract.
On the basis of the general scope indicated or described, the trade contractors shall furnish all items required for the proper execution and completion of the work.

REVISIONS:

2	ADDENDUM #2	06/17/2025

ISSUE DATE	DRAWN BY	CHECKED BY
05/30/2025	JSW	ECN

DRAWING TITLE:
ENLARGED SECTION DETAILS

CERTIFIED BY:
JAMES R. FUNK REGISTERED AR09900003 STATE OF INDIANA ARCHITECT

DRAWING NUMBER
A420

PROJECT NUMBER
2024022

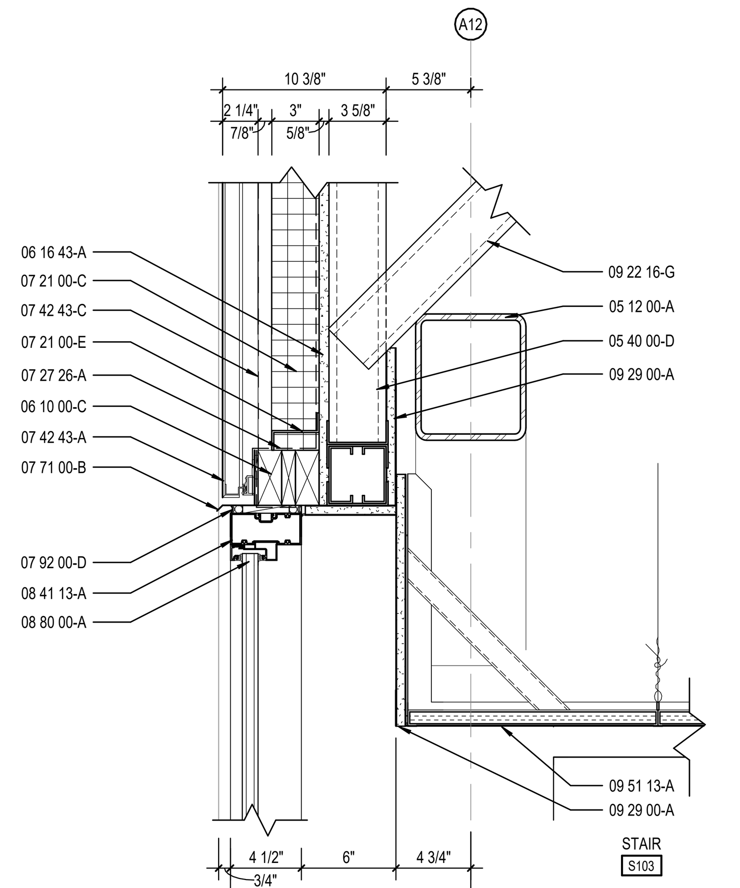

12 A421 **ENLARGED SECTION DETAIL**
SCALE: 1 1/2" = 1'-0"

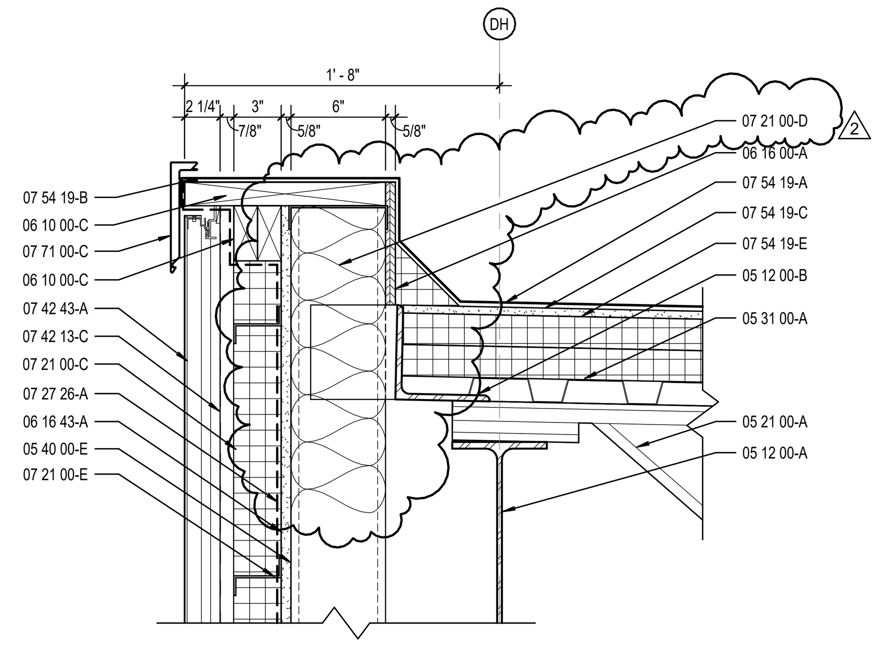

9 A421 **ENLARGED SECTION DETAIL**
SCALE: 1 1/2" = 1'-0"

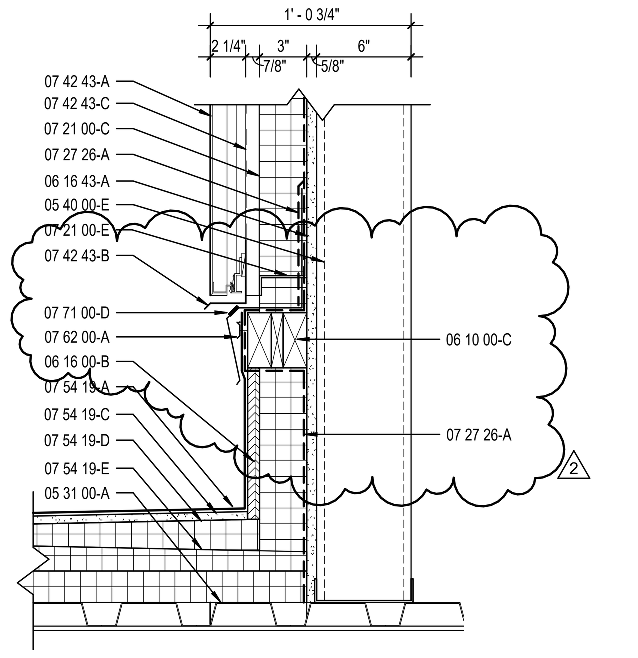

8 A421 **ENLARGED SECTION DETAIL**
SCALE: 1 1/2" = 1'-0"

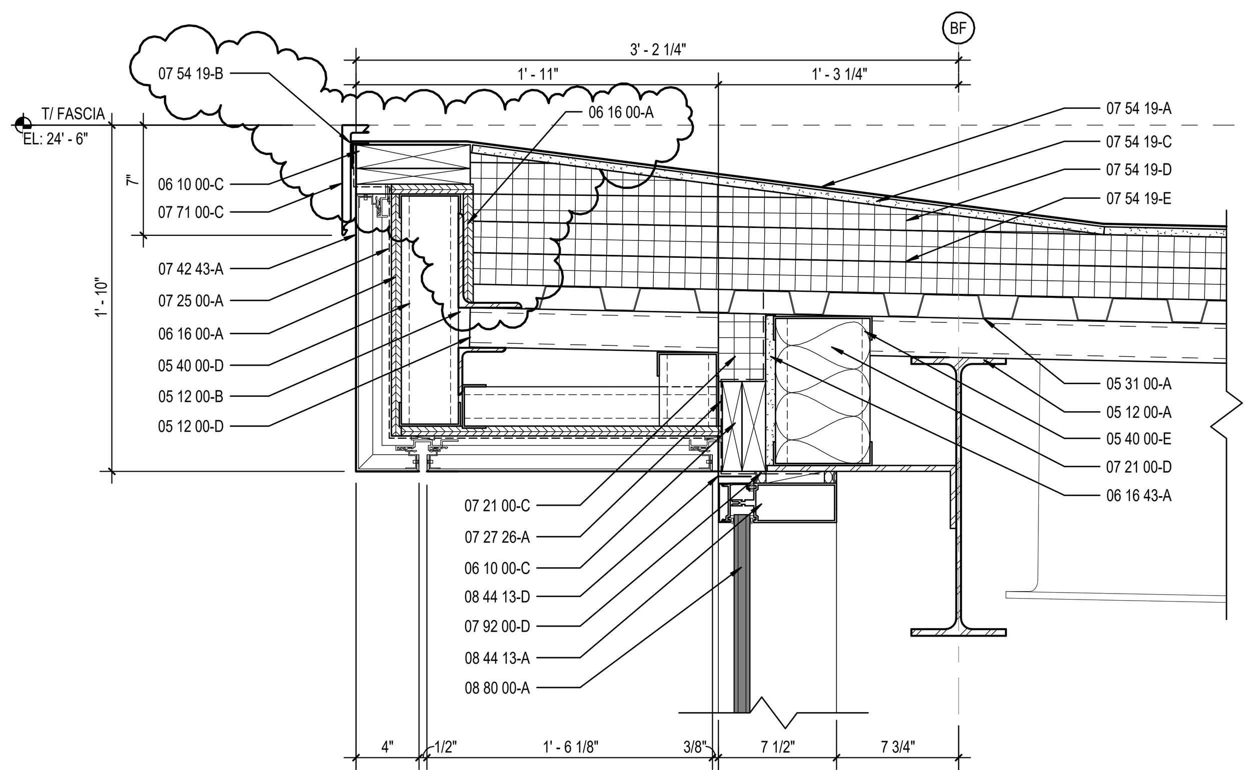

5 A421 **ENLARGED SECTION DETAIL**
SCALE: 1 1/2" = 1'-0"

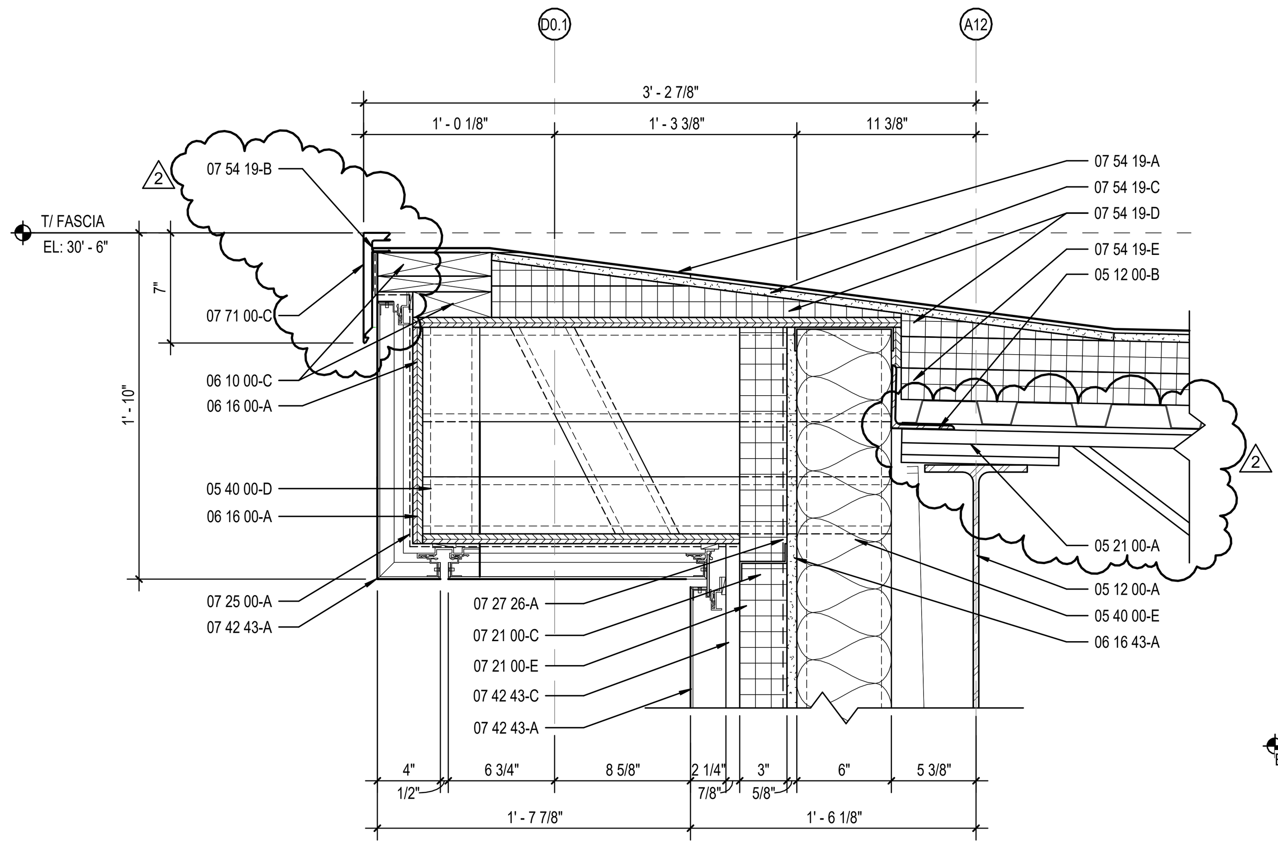

11 A421 **ENLARGED SECTION DETAIL**
SCALE: 1 1/2" = 1'-0"

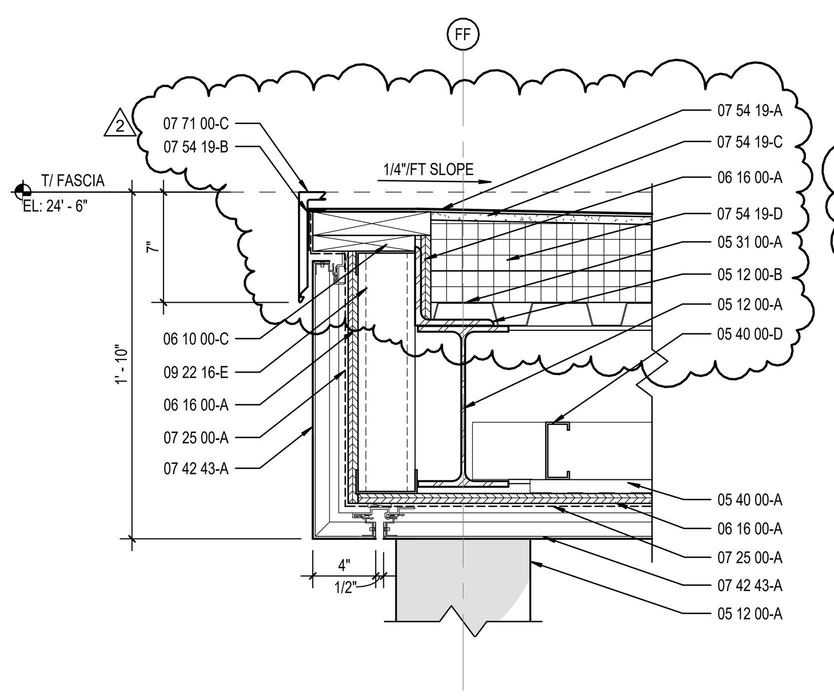

7 A421 **ENLARGED SECTION DETAIL**
SCALE: 1 1/2" = 1'-0"

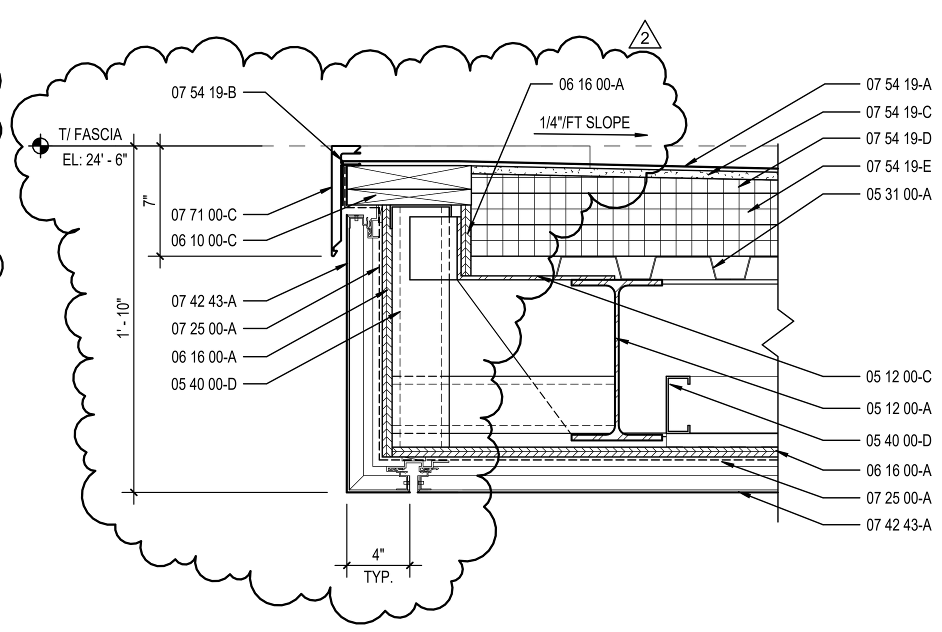

4 A421 **ENLARGED SECTION DETAIL**
SCALE: 1 1/2" = 1'-0"

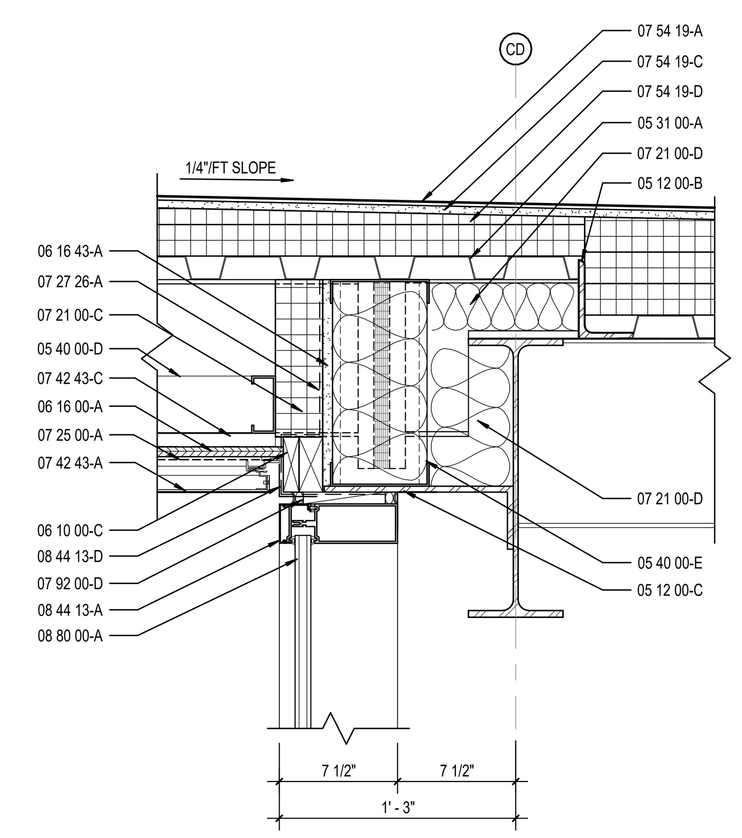

3 A421 **ENLARGED SECTION DETAIL**
SCALE: 1 1/2" = 1'-0"

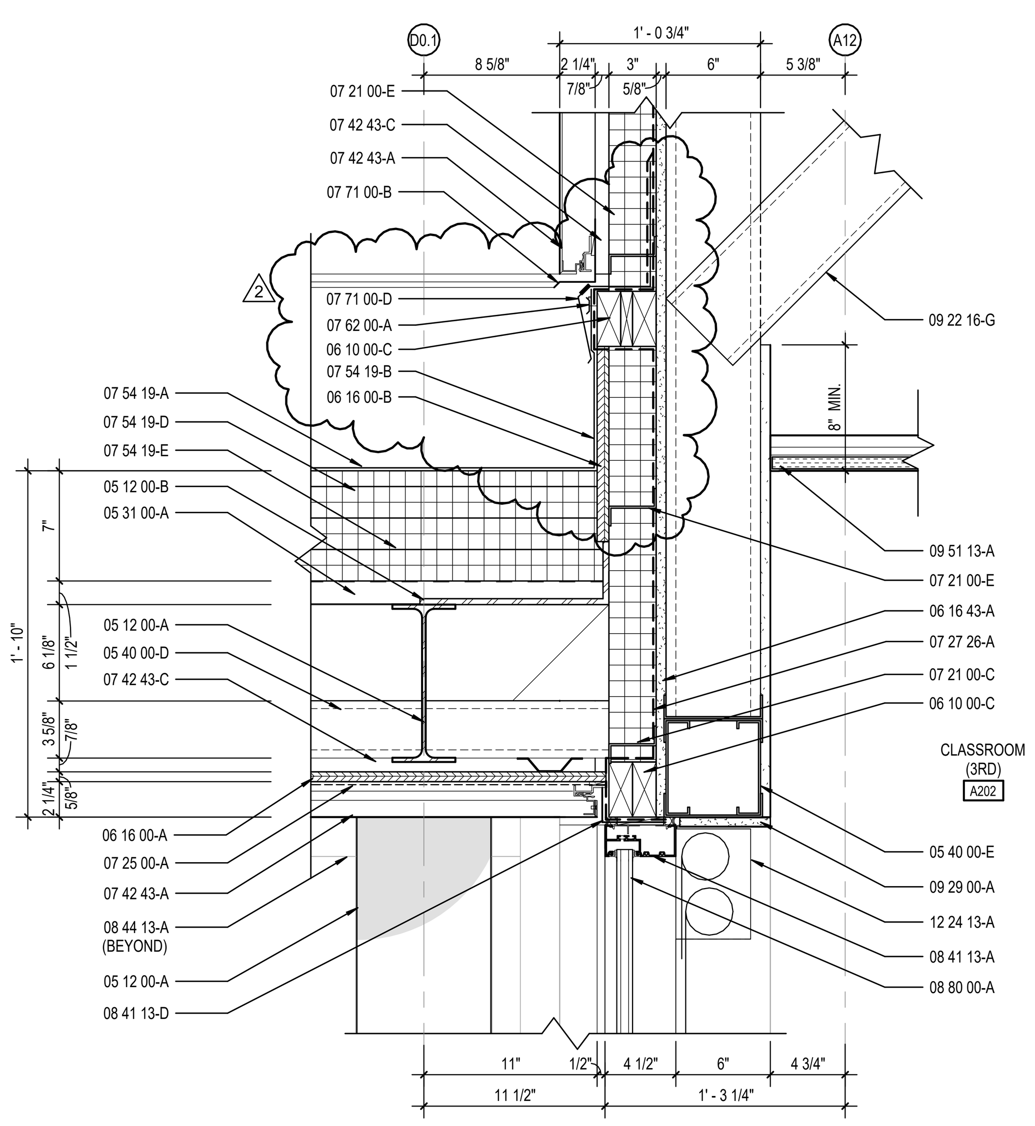

10 A421 **ENLARGED SECTION DETAIL**
SCALE: 1 1/2" = 1'-0"

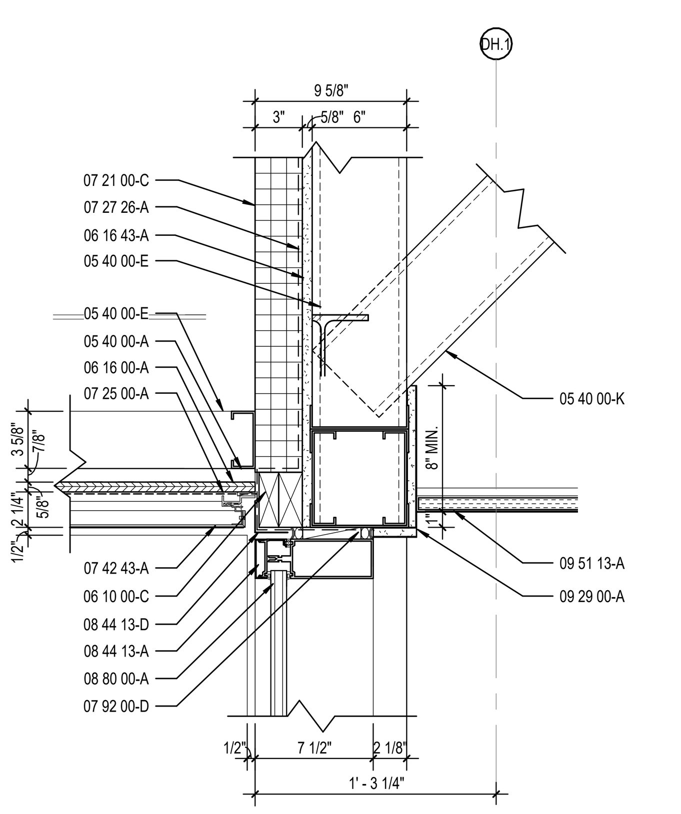

6 A421 **ENLARGED STAIR DETAIL**
SCALE: 1 1/2" = 1'-0"

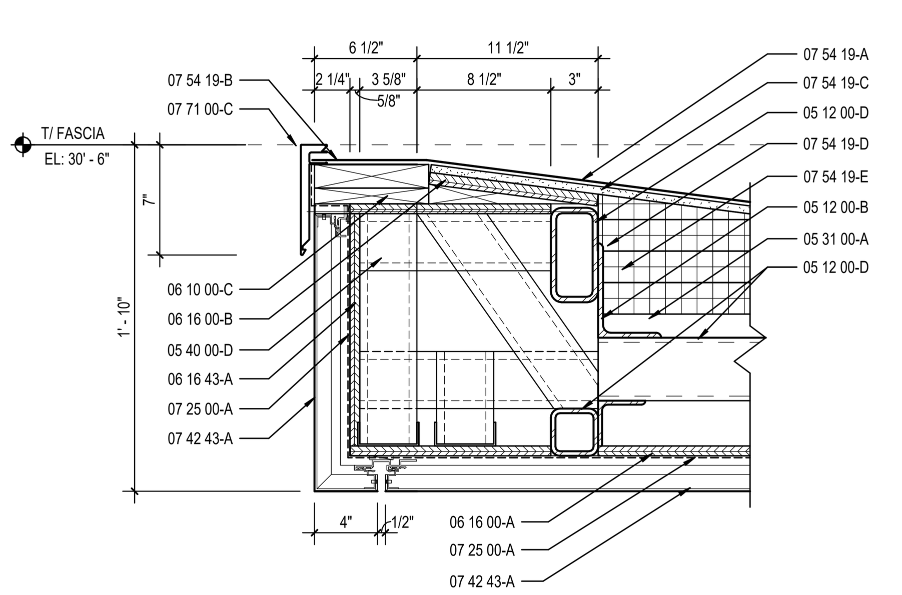

2 A421 **ENLARGED SECTION DETAIL**
SCALE: 1 1/2" = 1'-0"

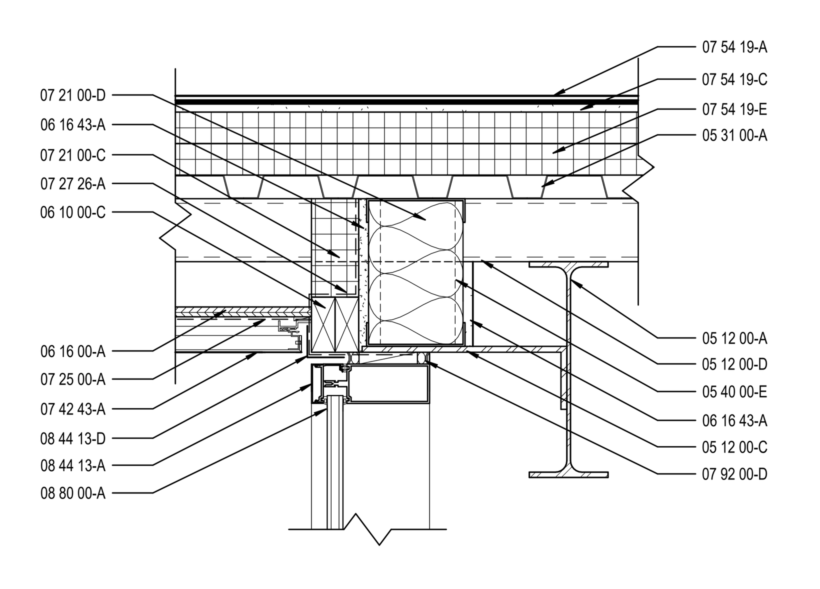

1 A421 **ENLARGED SECTION DETAIL**
SCALE: 1 1/2" = 1'-0"

KEYNOTE LEGEND

03 30 00-A	WATERSTOP
03 30 00-B	CONCRETE SLAB OVER VAPOR BARRIER ON DRAINAGE FILL. SEE STRUCTURAL
03 30 00-C	CONCRETE SLAB ON METAL DECK- SEE STRUCTURAL
03 30 00-D	CONCRETE FOUNDATION- SEE STRUCTURAL
03 30 00-E	CONCRETE FOOTING- SEE STRUCTURAL
03 45 00-A	ARCHITECTURAL PRECAST CONCRETE PANEL
03 45 00-C	CONNECTION BY PRECAST SUPPLIER
04 20 00-A	GROUT CORE SOLID
04 20 00-C	CONCRETE MASONRY UNIT
04 20 00-D	BULLNOSE UNIT
04 20 00-F	BOND BEAM MASONRY UNIT
04 20 00-L	8" CONCRETE MASONRY UNIT
04 20 00-M	10" CONCRETE MASONRY UNIT
05 12 00-A	STRUCTURAL STEEL FRAMING MEMBER- SEE STRUCTURAL
05 12 00-B	STEEL ANGLE- SEE STRUCTURAL
05 12 00-C	STEEL BENT PLATE- SEE STRUCTURAL
05 12 00-D	STEEL TUBE- SEE STRUCTURAL
05 21 00-A	STEEL JOIST- SEE STRUCTURAL
05 21 00-B	STEEL JOIST GIRDER- SEE STRUCTURAL
05 31 00-A	METAL ROOF DECKING- SEE STRUCTURAL
05 31 00-B	METAL FLOOR DECKING- SEE STRUCTURAL
05 40 00-A	7/8 16 GA. FURRING (HAT) CHANNEL
05 40 00-D	3 5/8 GALVANIZED STEEL STUDS (16 GA. MIN.)
05 40 00-E	6 GALVANIZED STEEL STUDS (16 GA. MIN.)
05 40 00-K	DIAGONAL BRACING AS REQUIRED
05 50 00-A	MISCELLANEOUS STEEL - SEE STRUCTURAL
05 50 00-B	PRE-MANUFACTURED ALUMINUM ACCESS LADDER
05 50 00-C	PRE-MANUFACTURED ALUMINUM SHIPS LADDER
05 50 00-D	ELEVATOR HOIST BEAM- COORDINATE WITH ELEVATOR MANUFACTURER
05 51 13-A	MANUFACTURED STEEL FRAMED STAIR
05 51 13-B	METAL PAN TREAD AND RISER
05 51 13-C	CONCRETE FILLED METAL PAN TREAD AND RISER
05 51 13-D	CONCRETE FILLED METAL PAN LANDING
05 51 13-E	METAL STAIR STRINGER- CHANNEL
05 51 13-F	METAL TREAD PAN AND RISER
05 51 13-G	CLIP PLATE
05 51 13-H	SUPPORT COLUMN - BY STAIR MANUFACTURER
05 52 13-A	1-1/4" I.D. ANODIZED ALUMINUM HANDRAIL
05 73 00-A	42" HIGH GLASS GUARDRAIL SYSTEM
05 73 00-B	1 1/4" I.D. STAINLESS STEEL HANDRAIL
05 73 00-C	ALUMINUM BASE SHOE WITH STAINLESS STEEL CLADDING
05 73 00-D	STAINLESS STEEL GLASS CAP
05 73 00-E	WOOD CAP RAIL - PROFILE AS SHOWN IN DRAWINGS
05 73 00-F	48" HIGH GLASS GUARDRAIL SYSTEM
05 73 00-G	2" SQUARE BRUSHED STAINLESS STEEL CAP RAIL
06 10 00-C	2X WOOD BLOCKING
06 16 00-A	5/8" EXTERIOR GRADE PLYWOOD
06 16 00-B	3/4" EXTERIOR GRADE PLYWOOD
06 16 43-A	5/8" EXTERIOR GYPSUM SHEATHING
06 40 23-A	1X HARDWOOD STAIR RISER - STAIN TO MATCH DOORS
06 40 23-B	2X HARDWOOD STAIR TREAD - SEE DETAILS FOR NOSING PROFILE - STAIN TO MATCH DOORS
06 40 23-C	ANTI-SLIP STAIR INSERT
06 40 23-D	PLASTIC LAMINATE ON 3/4" PARTICLEBOARD
06 40 23-E	2X HARDWOOD CAP - STAIN TO MATCH DOORS
06 40 23-F	METAL WRAPPED WOOD BENCH
07 13 26-A	SELF-ADHERING SHEET WATERPROOFING
07 13 26-B	MOLDED SHEET DRAINAGE PANEL
07 13 26-C	PROTECTION COURSE
07 21 00-A	SLAB PERIMETER RIGID INSULATION (R-15 FOR 24" HOIZONTAL R-10 TO TOP OF FOOTING OR 48" MAX VERTICAL)
07 21 00-C	3" CAVITY WALL EXTRUDED POLYSTYRENE INSULATION (R-16.8)
07 21 00-D	MINERAL WOOL BATT INSULATION
07 21 00-E	THERMALLY BROKEN COMPOSITE Z-GIRT @ 16" O.C. COORDINATE DIRECTION WITH METAL PANEL MANUFACTURER
07 25 00-A	WEATHER RESISTIVE BARRIERS- BUILDING WRAP
07 27 26-A	FLUID APPLIED MEMBRANE AIR BARRIER
07 42 13-A	FORMED METAL WALL PANEL
07 42 13-B	BRAKE METAL FLASHING/TRIM
07 42 13-C	METAL HAT CHANNEL (16 GA. MIN.) - SEE SECTIONS FOR DEPTH
07 42 43-A	COMPOSITE METAL WALL/SOFFIT PANEL
07 42 43-B	BRAKE METAL TRIM/FLASHING - COLOR AS SELECTED BY ARCHITECT
07 42 43-C	METAL HAT CHANNEL (16 GA. MIN.) - SEE SECTIONS FOR DEPTH
07 54 19-A	POLYVINYL CHLORIDE (PVC) MEMBRANE ROOFING SYSTEM
07 54 19-B	MEMBRANE ROOFING - EXTEND OVER AND ATTACH TO FRONT FACE OF PARAPET
07 54 19-C	1/2" COVER BOARD
07 54 19-D	TAPERED POLYISO INSULATION BOARD
07 54 19-E	2 LAYERS OF 2" POLYISO INSULATION BOARD (R-22.8)
07 54 19-F	2" POLYISO INSULATION BOARD (R-13)
07 62 00-A	TERMINATION BAR
07 71 00-A	MANUFACTURED COPING
07 71 00-B	MANUFACTURED DRIP EDGE / GRAVEL STOP
07 71 00-C	MANUFACTURED ROOF FASCIA
07 71 00-D	MANUFACTURED 2-PIECE COUNTERFLASHING SYSTEM
07 72 00-A	ROOF HATCH
07 76 00-A	PORCELAIN ROOF PAVERS ON ADJUSTABLE PEDESTALS
07 92 00-A	SEALANT
07 92 00-B	SEALANT EACH SIDE, TYPICAL
07 92 00-C	BACKER ROD AND SEALANT
07 92 00-D	BACKER ROD AND SEALANT EACH SIDE, TYPICAL
08 11 13-A	HOLLOW METAL DOOR/BORROWED LIGHT FRAME
08 11 13-B	GROUT SOLID
08 33 13-A	OVERHEAD COILING COUNTER DOOR
08 41 13-A	4 1/2" ALUMINUM-FRAMED STOREFRONT
08 41 13-B	WIDE STYLE ALUMINUM ENTRANCE DOOR
08 41 13-D	ALUMINUM BRAKE METAL FLASHING/TRIM TO MATCH STOREFRONT FRAME
08 41 13-E	2 1/2" X 2 1/2" ALUMINUM ANGLE CLOSURE. COLOR TO MATCH STOREFRONT
08 44 13-A	7 1/2" DEEP ALUMINUM CURTAINWALL SYSTEM
08 44 13-D	ALUMINUM BREAKMETAL FLASHING/TRIM TO MATCH CURTAINWALL FRAME
08 44 13-E	PRESSURE PLATE WITH MULLION CAP
08 80 00-A	GLAZING - SEE SCHEDULE/ELEVATIONS
09 22 16-D	2 1/2" STEEL STUD
09 22 16-E	3 5/8" STEEL STUD
09 22 16-F	6" STEEL STUD
09 22 16-G	METAL STUD KICKERS AS REQUIRED
09 29 00-A	5/8" GYPSUM WALL BOARD (SEE SPECS FOR TYPE)
09 29 00-C	SOUND ATTENUATION INSULATION
09 29 00-D	SUSPENDED GYPSUM BOARD CEILING ASSEMBLY
09 29 00-F	EXTRUDED ALUMINUM DRYWALL L-TRIM
09 29 00-G	EXTRUDED ALUMINUM 3/8" WIDE DRYWALL REVEAL
09 30 00-A	CERAMIC TILE
09 51 13-A	ACOUSTICAL CEILING SUSPENSION ASSEMBLY
09 54 26-A	WOOD GRILLE CEILING
09 64 66-A	WOOD ATHLETIC FLOORING SYSTEM
09 65 13-A	RESILIENT BASE
09 65 13-B	RESILIENT STAIR TREADS & RISERS
12 24 13-A	ROLLER WINDOW SHADES- SEE EQUIPMENT SCHEDULE
12 36 61-B	SOLID SURFACE
14 24 00-A	HYDRAULIC MRL ELEVATOR
14 24 00-B	ELEVATOR DOOR AND FRAME
14 24 00-C	PIT LADDER
14 24 00-D	ELEVATOR SILL
31 20 00-A	FINISH GRADE- SEE CIVIL SHEETS
31 20 00-B	COMPACTED EARTH
31 20 00-C	DRAINING GRANULAR FILL
32 13 13-A	SIDEWALK- SEE CIVIL SHEETS

BCSC
TOGETHER WE LEARN

CSO
8831 Keystone Crossing, Indianapolis, IN 46240
317.848.7800 | csoinc.net
© 2025 CSO Architects, Inc. All Rights Reserved

Höweler+Yoon Architecture
617.517.4101 howeleryoon.com

PROJECT:
BARTHOLOMEW CONSOLIDATED SCHOOL CORPORATION
MAPLE GROVE ELEMENTARY
TIPTON LAKES BLVD, COLUMBUS, IN 47201

SCOPE DRAWINGS:
These drawings indicate the general scope of the project in terms of architectural design concept, the dimensions of the building, the major architectural elements and the type of structural, mechanical and electrical systems.
The drawings do not necessarily indicate or describe all work required for full performance and completion of the requirements of the Contract.
On the basis of the general scope indicated or described, the trade contractors shall furnish all items required for the proper execution and completion of the work.

REVISIONS:

1	ADDENDUM #1	06/10/2025
2	ADDENDUM #2	06/17/2025

ISSUE DATE	DRAWN BY	CHECKED BY
05/30/2025	JSW	ECN

DRAWING TITLE:
ENLARGED SECTION DETAILS

CERTIFIED BY:
JAMES R. FUNK
REGISTERED
AR00900003
STATE OF
INDIANA
ARCHITECT

DRAWING NUMBER
A421

PROJECT NUMBER
2024022

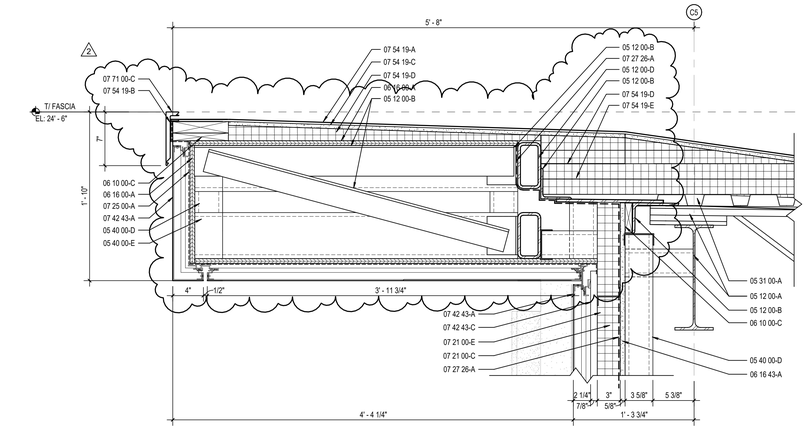

8 A422 ENLARGED SECTION DETAIL
SCALE: 1 1/2" = 1'-0"

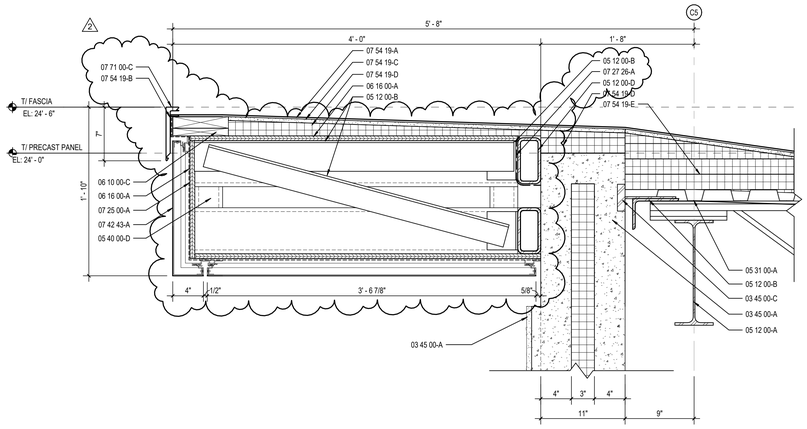

9 A422 ENLARGED SECTION DETAIL
SCALE: 1 1/2" = 1'-0"

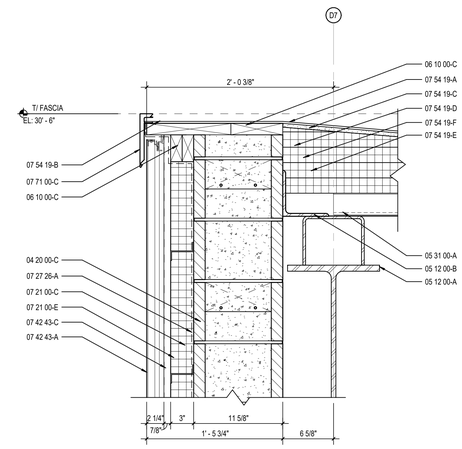

7 A422 ENLARGED SECTION DETAIL
SCALE: 1 1/2" = 1'-0"

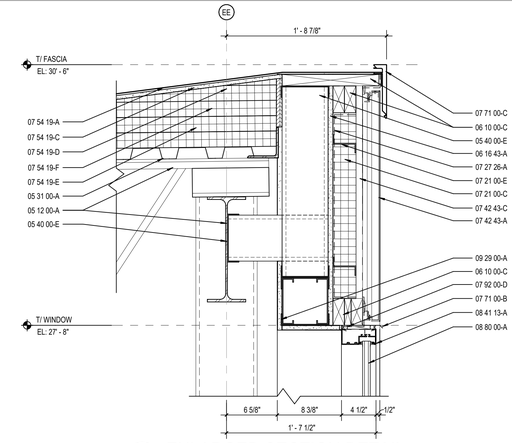

4 A422 ENLARGED SECTION DETAIL
SCALE: 1 1/2" = 1'-0"

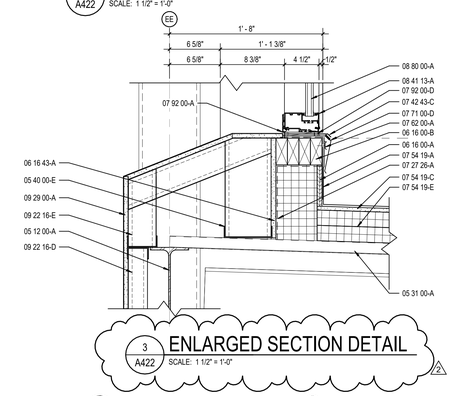

3 A422 ENLARGED SECTION DETAIL
SCALE: 1 1/2" = 1'-0"

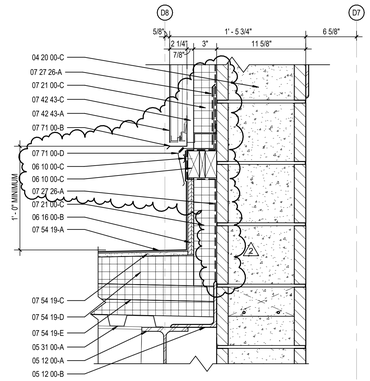

6 A422 ENLARGED SECTION DETAIL
SCALE: 1 1/2" = 1'-0"

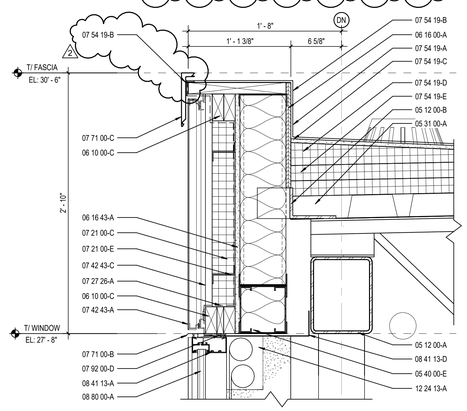

2 A422 ENLARGED SECTION DETAIL
SCALE: 1 1/2" = 1'-0"

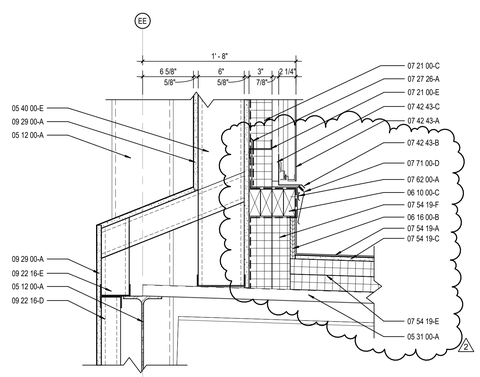

5 A422 ENLARGED SECTION DETAIL
SCALE: 1 1/2" = 1'-0"

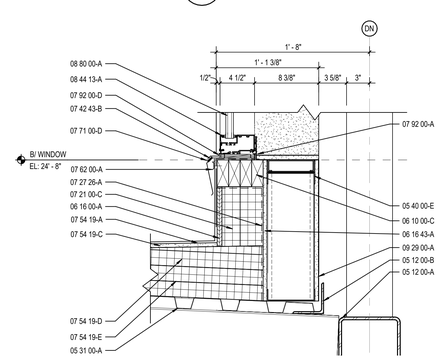

1 A422 ENLARGED SECTION DETAIL
SCALE: 1 1/2" = 1'-0"

KEYNOTE LEGEND

03 30 00-A	WATERSTOP
03 30 00-B	CONCRETE SLAB OVER VAPOR BARRIER ON DRAINAGE FILL. SEE STRUCTURAL
03 30 00-C	CONCRETE SLAB ON METAL DECK- SEE STRUCTURAL
03 30 00-D	CONCRETE FOUNDATION- SEE STRUCTURAL
03 30 00-E	CONCRETE FOOTING- SEE STRUCTURAL
03 45 00-A	ARCHITECTURAL PRECAST CONCRETE PANEL
03 45 00-C	CONNECTION BY PRECAST SUPPLIER
04 20 00-A	GROUT CORE SOLID
04 20 00-C	CONCRETE MASONRY UNIT
04 20 00-D	BULLNOSE UNIT
04 20 00-F	BOND BEAM MASONRY UNIT
04 20 00-L	8" CONCRETE MASONRY UNIT
04 20 00-M	10" CONCRETE MASONRY UNIT
05 12 00-A	STRUCTURAL STEEL FRAMING MEMBER- SEE STRUCTURAL
05 12 00-B	STEEL ANGLE- SEE STRUCTURAL
05 12 00-C	STEEL BENT PLATE- SEE STRUCTURAL
05 12 00-D	STEEL TUBE- SEE STRUCTURAL
05 21 00-A	STEEL JOIST- SEE STRUCTURAL
05 21 00-B	STEEL JOIST GIRDER- SEE STRUCTURAL
05 31 00-A	METAL ROOF DECKING- SEE STRUCTURAL
05 31 00-B	METAL FLOOR DECKING- SEE STRUCTURAL
05 40 00-A	7/8 16 GA. FURRING (HAT) CHANNEL
05 40 00-D	3 5/8 GALVANIZED STEEL STUDS (16 GA. MIN.)
05 40 00-E	6 GALVANIZED STEEL STUDS (16 GA. MIN.)
05 40 00-K	DIAGONAL BRACING AS REQUIRED
05 50 00-A	MISCELLANEOUS STEEL- SEE STRUCTURAL
05 50 00-B	PRE-MANUFACTURED ALUMINUM ACCESS LADDER
05 50 00-C	PRE-MANUFACTURED ALUMINUM SHIPS LADDER
05 50 00-D	ELEVATOR HOIST BEAM- COORDINATE WITH ELEVATOR MANUFACTURER
05 51 13-A	MANUFACTURED STEEL FRAMED STAIR
05 51 13-B	METAL PAN TREAD AND RISER
05 51 13-C	CONCRETE FILLED METAL PAN TREAD AND RISER
05 51 13-D	CONCRETE FILLED METAL PAN LANDING
05 51 13-E	METAL STAIR STRINGER- CHANNEL
05 51 13-F	METAL TREAD PAN AND RISER
05 51 13-G	CLIP PLATE
05 51 13-H	SUPPORT COLUMN - BY STAIR MANUFACTURER
05 52 13-A	1-1/4" I.D. ANODIZED ALUMINUM HANDRAIL
05 73 00-A	42" HIGH GLASS GUARDRAIL SYSTEM
05 73 00-B	1 1/4" I.D. STAINLESS STEEL HANDRAIL
05 73 00-C	ALUMINUM BASE SHOE WITH STAINLESS STEEL CLADDING
05 73 00-D	STAINLESS STEEL GLASS CAP
05 73 00-E	WOOD CAP RAIL - PROFILE AS SHOWN IN DRAWINGS
05 73 00-F	48" HIGH GLASS GUARDRAIL SYSTEM
05 73 00-G	2" SQUARE BRUSHED STAINLESS STEEL CAP RAIL
06 10 00-C	2X WOOD BLOCKING
06 16 00-A	5/8" EXTERIOR GRADE PLYWOOD
06 16 00-B	3/4" EXTERIOR GRADE PLYWOOD
06 16 43-A	5/8" EXTERIOR GYPSUM SHEATHING
06 40 23-A	1X HARDWOOD STAIR RISER - STAIN TO MATCH DOORS
06 40 23-B	2X HARDWOOD STAIR TREAD - SEE DETAILS FOR NOSING PROFILE - STAIN TO MATCH DOORS
06 40 23-C	ANTI-SLIP STAIR INSERT
06 40 23-D	PLASTIC LAMINATE ON 3/4" PARTICLEBOARD
06 40 23-E	2X HARDWOOD CAP - STAIN TO MATCH DOORS
06 40 23-F	METAL WRAPPED WOOD BENCH
07 13 26-A	SELF-ADHERING SHEET WATERPROOFING
07 13 26-B	MOLDED SHEET DRAINAGE PANEL
07 13 26-C	PROTECTION COURSE
07 21 00-A	SLAB PERIMETER RIGID INSULATION (R-15 FOR 24" HOIZONTAL R-10 TO TOP OF FOOTING OR 48" MAX VERTICAL)
07 21 00-C	3" CAVITY WALL EXTRUDED POLYSTYRENE INSULATION (R-16.8)
07 21 00-D	MINERAL WOOL BATT INSULATION
07 21 00-E	THERMALLY BROKEN COMPOSITE Z-GIRT @ 16" O.C. COORDINATE DIRECTION WITH METAL PANEL MANUFACTURER
07 25 00-A	WEATHER RESISTIVE BARRIERS- BUILDING WRAP
07 27 26-A	FLUID APPLIED MEMBRANE AIR BARRIER
07 42 13-A	FORMED METAL WALL PANEL
07 42 13-B	BRAKE METAL FLASHING/TRIM
07 42 13-C	METAL HAT CHANNEL (16 GA. MIN.) - SEE SECTIONS FOR DEPTH
07 42 43-A	COMPOSITE METAL WALL/SOFFIT PANEL
07 42 43-B	BRAKE METAL TRIM/FLASHING - COLOR AS SELECTED BY ARCHITECT
07 42 43-C	METAL HAT CHANNEL (16 GA. MIN.) - SEE SECTIONS FOR DEPTH
07 54 19-A	POLYVINYL CHLORIDE (PVC) MEMBRANE ROOFING SYSTEM
07 54 19-B	MEMBRANE ROOFING - EXTEND OVER AND ATTACH TO FRONT FACE OF PARAPET
07 54 19-C	1/2" COVER BOARD
07 54 19-D	TAPERED POLYISO INSULATION BOARD
07 54 19-E	2 LAYERS OF 2" POLYISO INSULATION BOARD (R-22.8)
07 54 19-F	2" POLYISO INSULATION BOARD (R-13)
07 62 00-A	TERMINATION BAR
07 71 00-A	MANUFACTURED COPING
07 71 00-B	MANUFACTURED DRIP EDGE / GRAVEL STOP
07 71 00-C	MANUFACTURED ROOF FASCIA
07 71 00-D	MANUFACTURED 2-PIECE COUNTERFLASHING SYSTEM
07 72 00-A	ROOF HATCH
07 76 00-A	PORCELAIN ROOF PAVERS ON ADJUSTABLE PEDESTALS
07 92 00-A	SEALANT
07 92 00-B	SEALANT EACH SIDE, TYPICAL
07 92 00-C	BACKER ROD AND SEALANT
07 92 00-D	BACKER ROD AND SEALANT EACH SIDE, TYPICAL
08 11 13-A	HOLLOW METAL DOOR/BORROWED LIGHT FRAME
08 11 13-B	GROUT SOLID
08 33 13-A	OVERHEAD COILING COUNTER DOOR
08 41 13-A	4 1/2" ALUMINUM-FRAMED STOREFRONT
08 41 13-B	WIDE STYLE ALUMINUM ENTRANCE DOOR
08 41 13-D	ALUMINUM BRAKE METAL FLASHING/TRIM TO MATCH STOREFRONT FRAME
08 41 13-E	2 1/2" X 2 1/2" ALUMINUM ANGLE CLOSURE. COLOR TO MATCH STOREFRONT
08 44 13-A	7 1/2" DEEP ALUMINUM CURTAINWALL SYSTEM
08 44 13-D	ALUMINUM BREAKMETAL FLASHING/TRIM TO MATCH CURTAINWALL FRAME
08 44 13-E	PRESSURE PLATE WITH MULLION CAP
08 80 00-A	GLAZING - SEE SCHEDULE/ELEVATIONS
09 22 16-D	2 1/2" STEEL STUD
09 22 16-E	3 5/8" STEEL STUD
09 22 16-F	6" STEEL STUD
09 22 16-G	METAL STUD KICKERS AS REQUIRED
09 29 00-A	5/8" GYPSUM WALL BOARD (SEE SPECS FOR TYPE)
09 29 00-C	SOUND ATTENUATION INSULATION
09 29 00-D	SUSPENDED GYPSUM BOARD CEILING ASSEMBLY
09 29 00-F	EXTRUDED ALUMINUM DRYWALL L-TRIM
09 29 00-G	EXTRUDED ALUMINUM 3/8" WIDE DRYWALL REVEAL
09 30 00-A	CERAMIC TILE
09 51 13-A	ACOUSTICAL CEILING SUSPENSION ASSEMBLY
09 54 26-A	WOOD GRILLE CEILING
09 64 66-A	WOOD ATHLETIC FLOORING SYSTEM
09 65 13-A	RESILIENT BASE
09 65 13-B	RESILIENT STAIR TREADS & RISERS
12 24 13-A	ROLLER WINDOW SHADES- SEE EQUIPMENT SCHEDULE
12 36 61-B	SOLID SURFACE
14 24 00-A	HYDRAULIC MRL ELEVATOR
14 24 00-B	ELEVATOR DOOR AND FRAME
14 24 00-C	PIT LADDER
14 24 00-D	ELEVATOR SILL
31 20 00-A	FINISH GRADE- SEE CIVIL SHEETS
31 20 00-B	COMPACTED EARTH
31 20 00-C	DRAINING GRANULAR FILL
32 13 13-A	SIDEWALK- SEE CIVIL SHEETS

BCSC
TOGETHER WE LEARN

CSO
8831 Keystone Crossing, Indianapolis, IN 46240
317.848.7800 | csoinc.net

© 2025 CSO Architects, Inc. All Rights Reserved

Howeler+Yoon Architecture
617.517.4101 howeleryoon.com

PROJECT:
BARTHOLOMEW CONSOLIDATED SCHOOL CORPORATION
MAPLE GROVE ELEMENTARY
TIPTON LAKES BLVD, COLUMBUS, IN 47201

SCOPE DRAWINGS:

These drawings indicate the general scope of the project. They do not necessarily indicate or describe all work required for the building, the major architectural elements and the type of structural, mechanical and electrical systems.

The drawings do not necessarily indicate or describe all work required for full performance and completion of the building and site improvements.

On the basis of the general scope indicated or described, the trade contractors shall furnish all items required for the proper execution and completion of the work.

REVISIONS:

1	ADDENDUM #1	06/10/2025
2	ADDENDUM #2	06/17/2025

ISSUE DATE	DRAWN BY	CHECKED BY
05/30/2025	JSW	ECN

DRAWING TITLE:
ENLARGED SECTION DETAILS

CERTIFIED BY:
JAMES R. FUNK REGISTERED AR0900003 STATE OF INDIANA ARCHITECT

DRAWING NUMBER
A422

PROJECT NUMBER
2024022

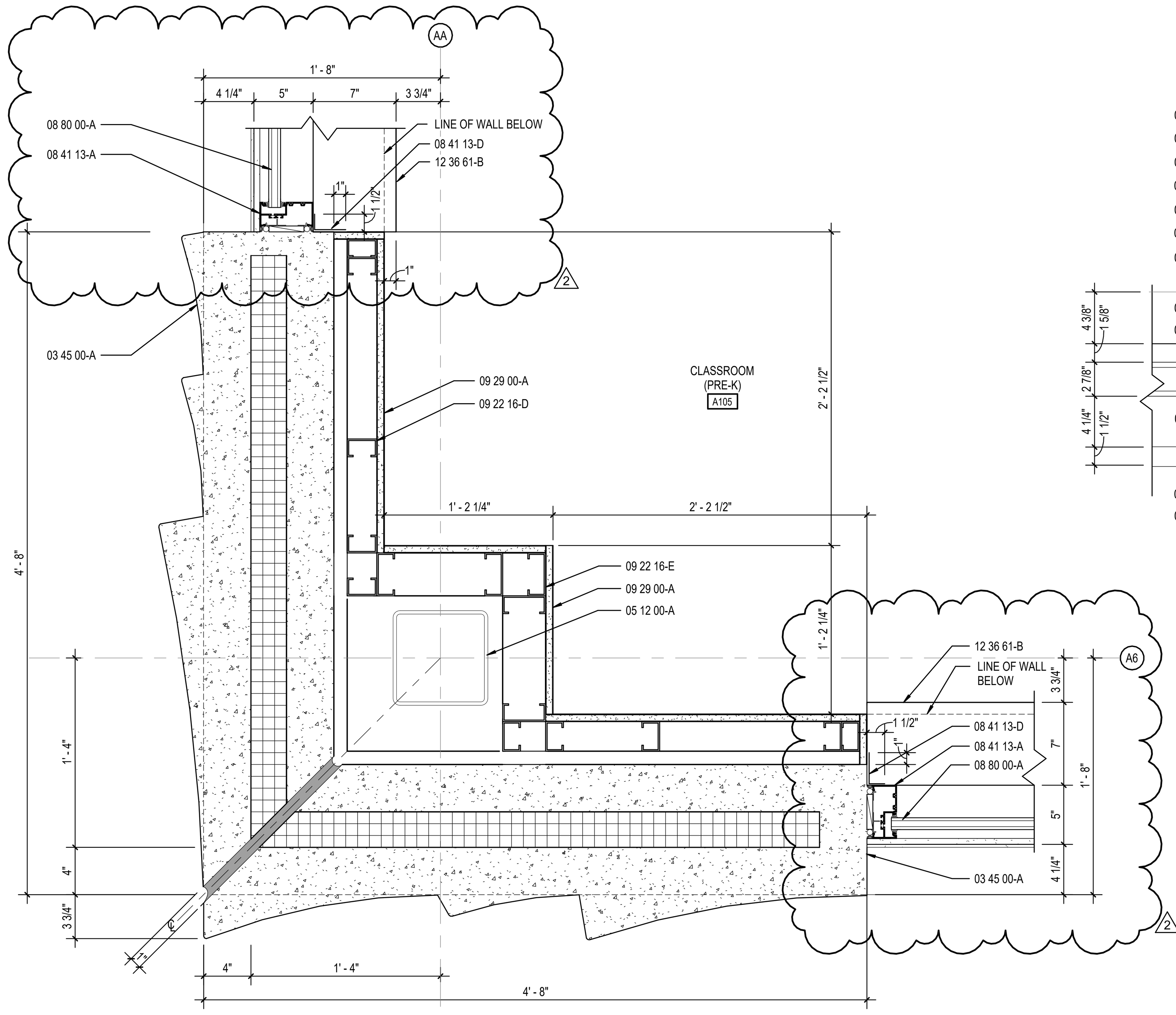

11 A430 **ENLARGED PLAN DETAIL**
SCALE: 1 1/2" = 1'-0"

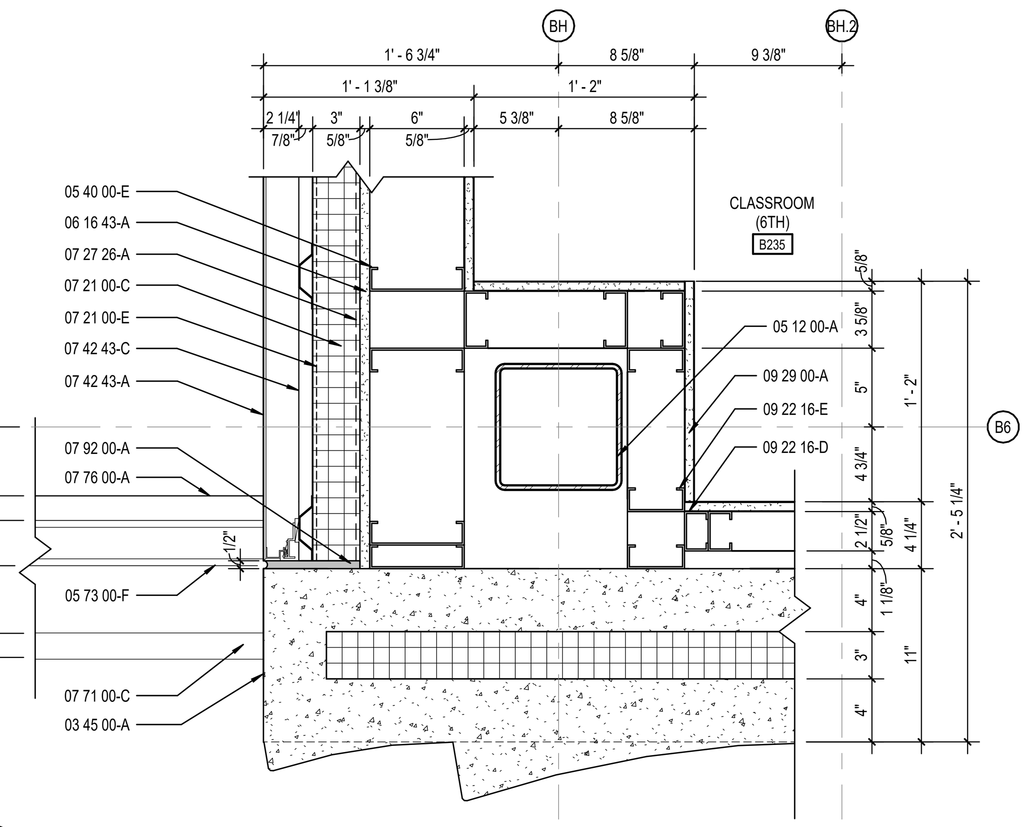

10 A430 **ENLARGED PLAN DETAIL**
SCALE: 1 1/2" = 1'-0"

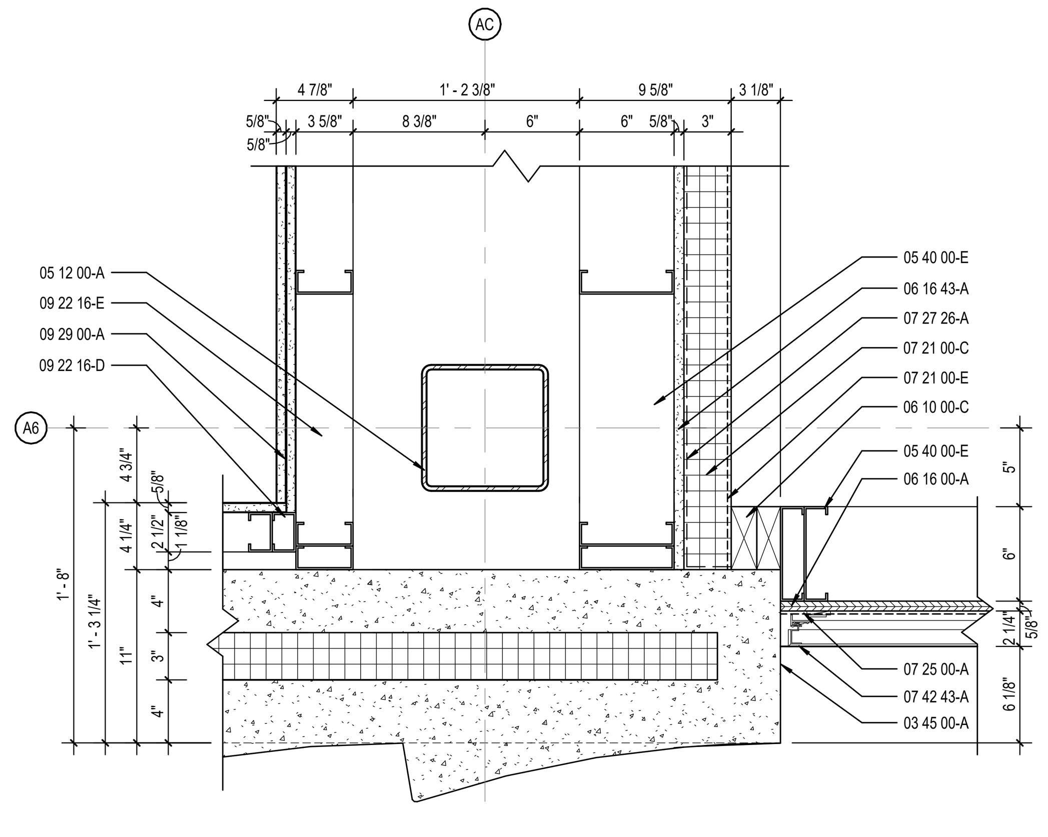

9 A430 **ENLARGED PLAN DETAIL**
SCALE: 1 1/2" = 1'-0"

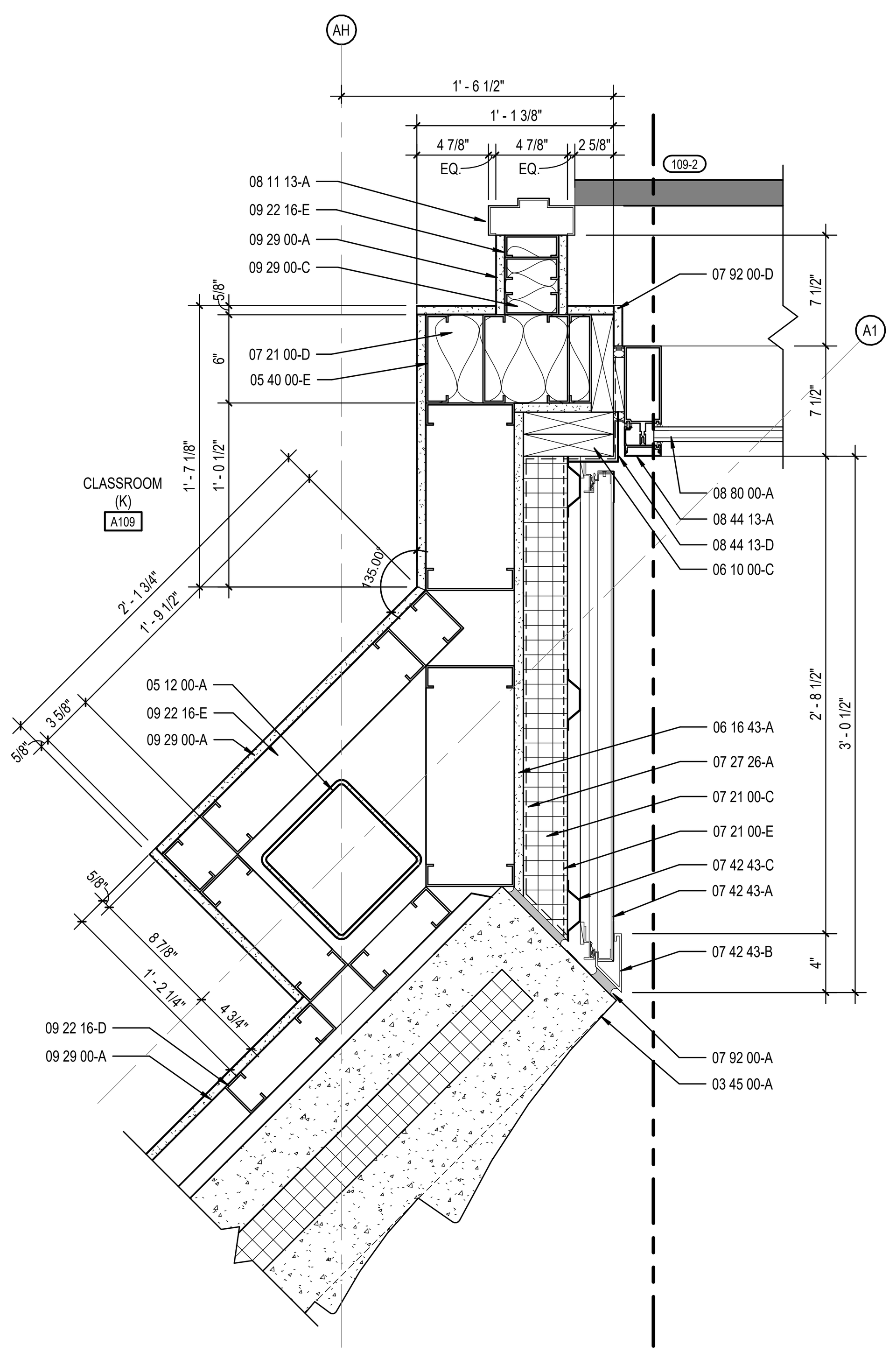

6 A430 **ENLARGED PLAN DETAIL**
SCALE: 1 1/2" = 1'-0"

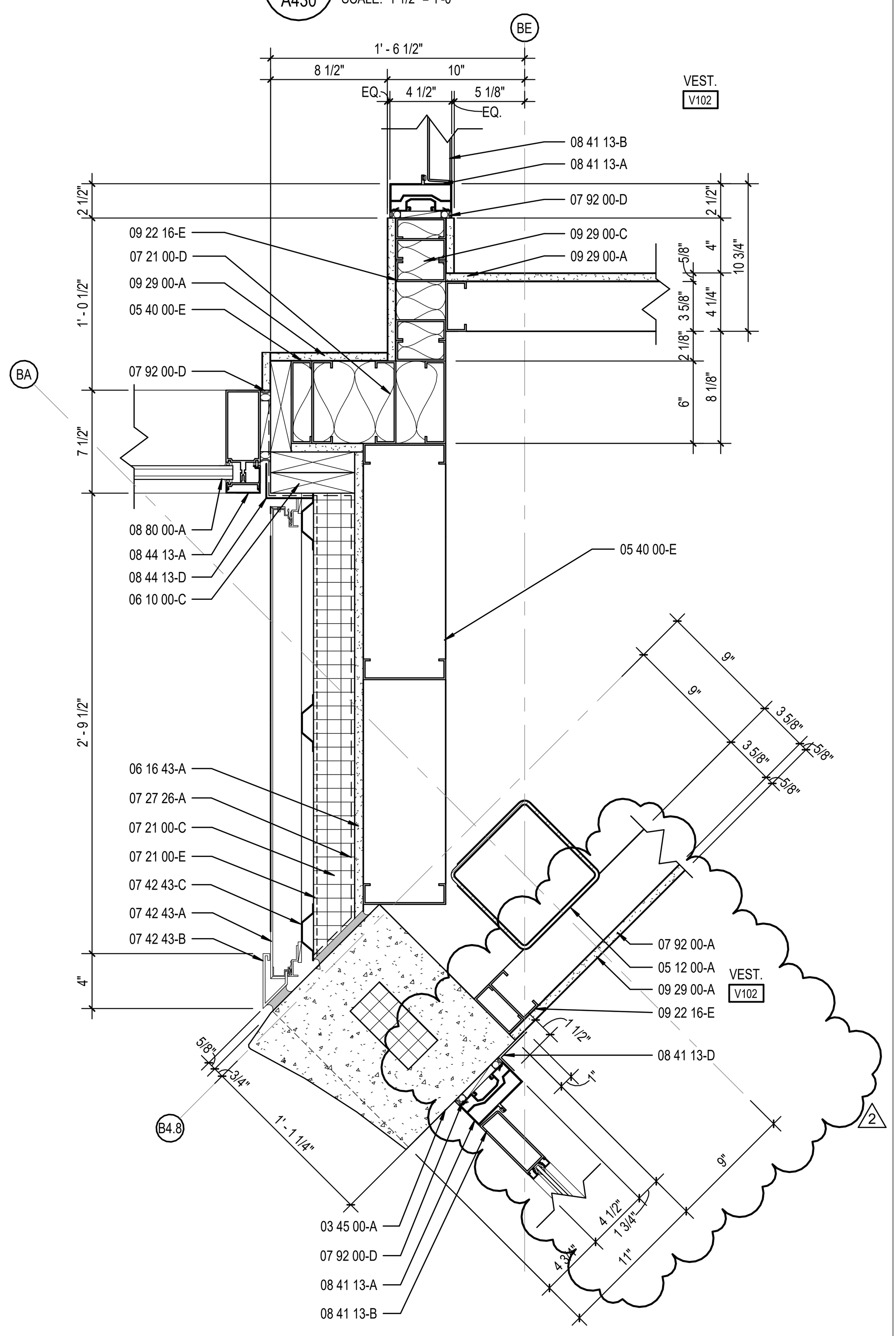

5 A430 **ENLARGED PLAN DETAIL**
SCALE: 1 1/2" = 1'-0"

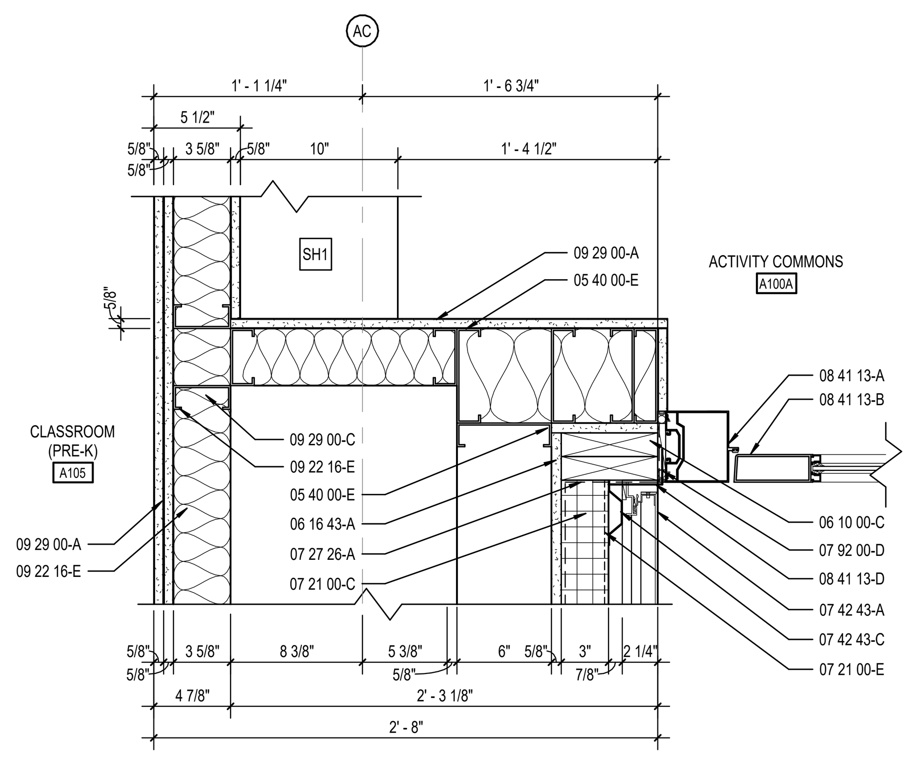

8 A430 **ENLARGED PLAN DETAIL**
SCALE: 1 1/2" = 1'-0"

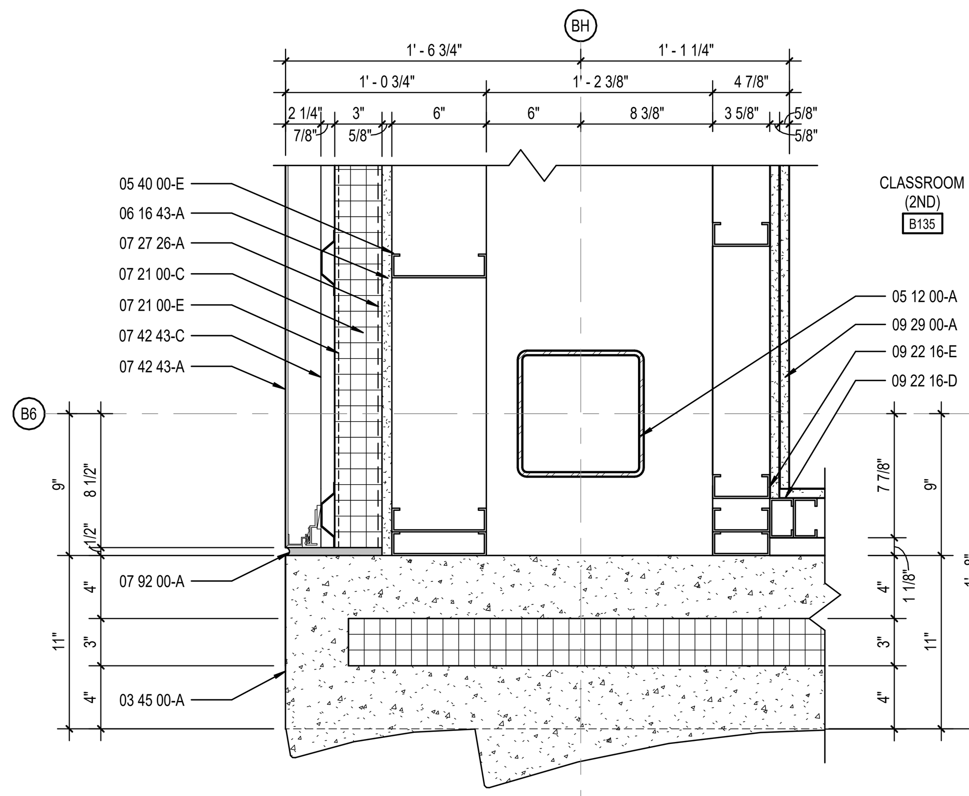

7 A430 **ENLARGED PLAN DETAIL**
SCALE: 1 1/2" = 1'-0"

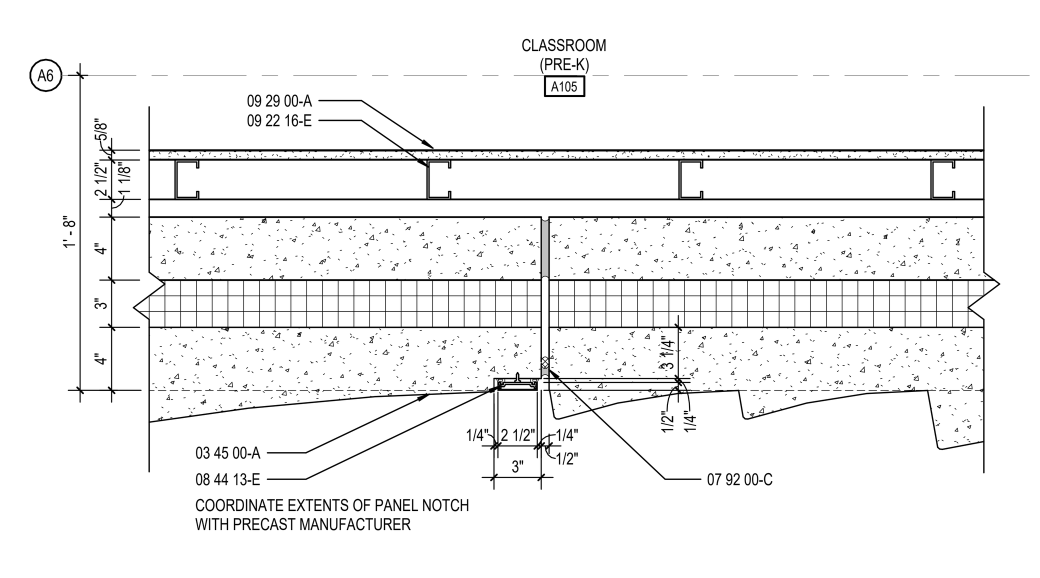

4 A430 **ENLARGED PLAN DETAIL**
SCALE: 1 1/2" = 1'-0"

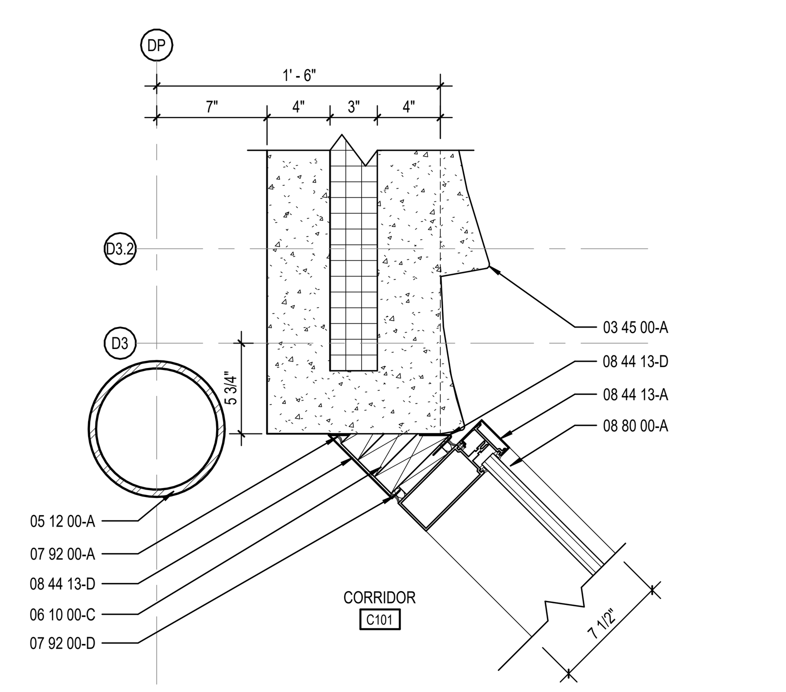

3 A430 **ENLARGED PLAN DETAIL**
SCALE: 1 1/2" = 1'-0"

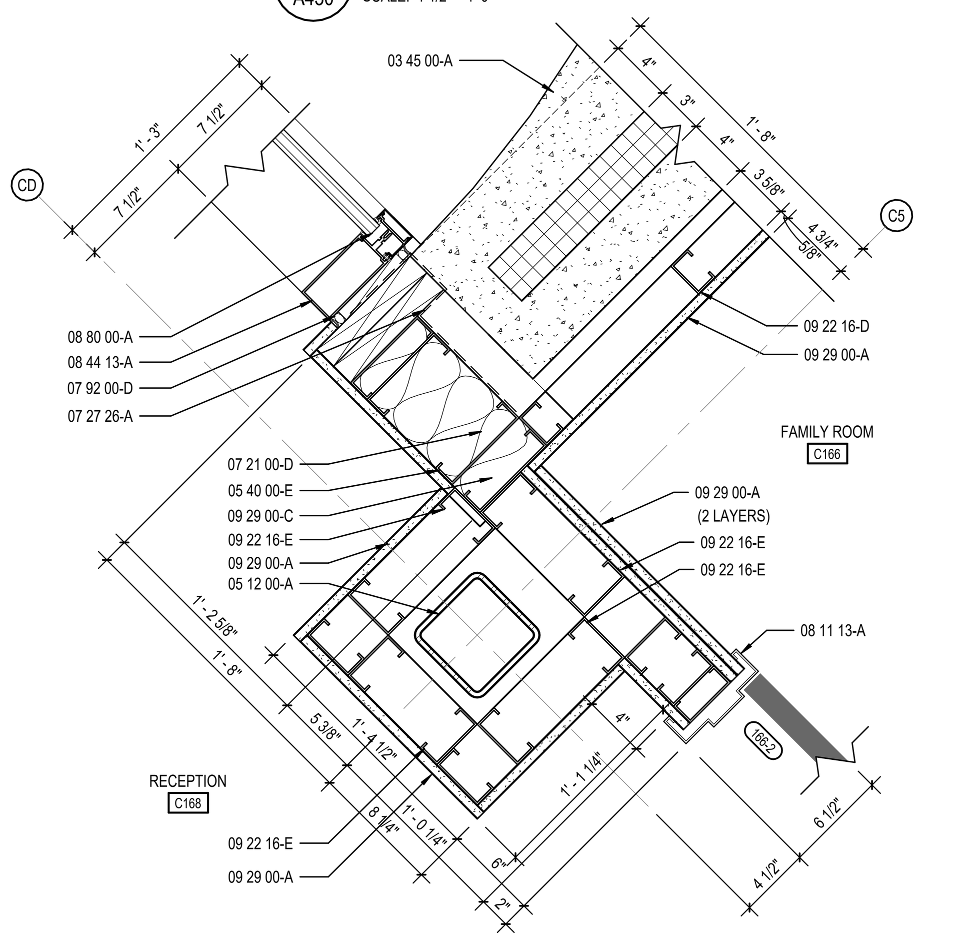

2 A430 **ENLARGED PLAN DETAIL**
SCALE: 1 1/2" = 1'-0"

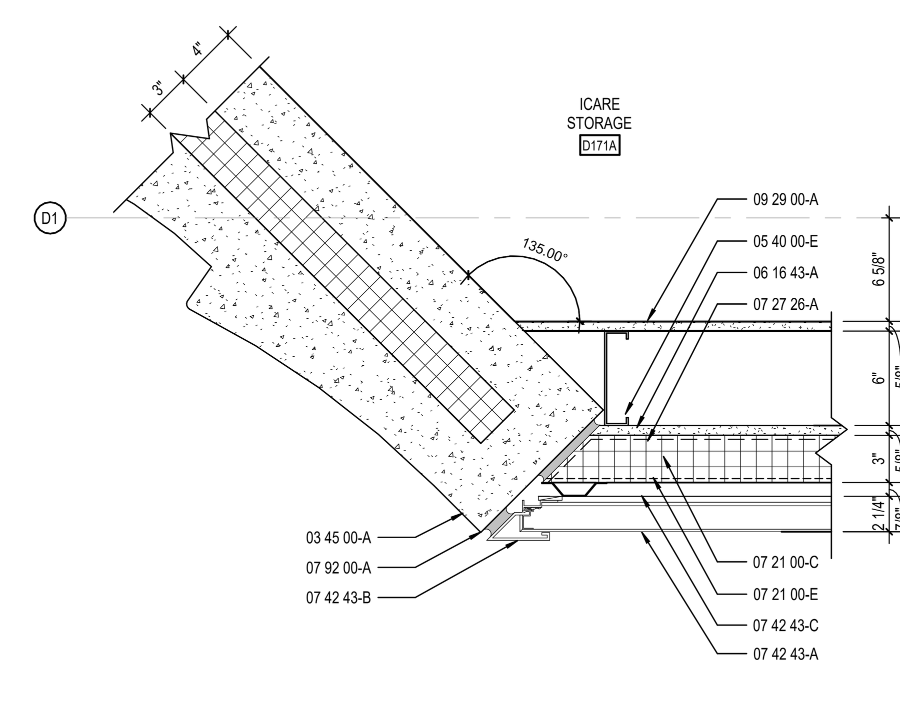

1 A430 **ENLARGED PLAN DETAIL**
SCALE: 1 1/2" = 1'-0"

KEYNOTE LEGEND

03 30 00-A	WATERSTOP
03 30 00-B	CONCRETE SLAB OVER VAPOR BARRIER ON DRAINAGE FILL. SEE STRUCTURAL
03 30 00-C	CONCRETE SLAB ON METAL DECK- SEE STRUCTURAL
03 30 00-D	CONCRETE FOUNDATION- SEE STRUCTURAL
03 30 00-E	CONCRETE FOOTING- SEE STRUCTURAL
03 45 00-A	ARCHITECTURAL PRECAST CONCRETE PANEL
03 45 00-C	CONNECTION BY PRECAST SUPPLIER
04 20 00-A	GROUT CORE SOLID
04 20 00-C	CONCRETE MASONRY UNIT
04 20 00-D	BULLNOSE UNIT
04 20 00-F	BOND BEAM MASONRY UNIT
04 20 00-L	8" CONCRETE MASONRY UNIT
04 20 00-M	10" CONCRETE MASONRY UNIT
05 12 00-A	STRUCTURAL STEEL FRAMING MEMBER- SEE STRUCTURAL
05 12 00-B	STEEL ANGLE- SEE STRUCTURAL
05 12 00-C	STEEL BENT PLATE- SEE STRUCTURAL
05 12 00-D	STEEL TUBE- SEE STRUCTURAL
05 21 00-A	STEEL JOIST- SEE STRUCTURAL
05 21 00-B	STEEL JOIST GIRDER- SEE STRUCTURAL
05 31 00-A	METAL ROOF DECKING- SEE STRUCTURAL
05 31 00-B	METAL FLOOR DECKING- SEE STRUCTURAL
05 40 00-A	7/8 16 GA. FURRING (HAT) CHANNEL
05 40 00-D	3 5/8 GALVANIZED STEEL STUDS (16 GA. MIN.)
05 40 00-E	6 GALVANIZED STEEL STUDS (16 GA. MIN.)
05 40 00-K	DIAGONAL BRACING AS REQUIRED
05 50 00-A	MISCELLANEOUS STEEL - SEE STRUCTURAL
05 50 00-B	PRE-MANUFACTURED ALUMINUM ACCESS LADDER
05 50 00-C	PRE-MANUFACTURED ALUMINUM SHIPS LADDER
05 50 00-D	ELEVATOR HOIST BEAM- COORDINATE WITH ELEVATOR MANUFACTURER
05 51 13-A	MANUFACTURED STEEL FRAMED STAIR
05 51 13-B	METAL PAN TREAD AND RISER
05 51 13-C	CONCRETE FILLED METAL PAN TREAD AND RISER
05 51 13-D	CONCRETE FILLED METAL PAN LANDING
05 51 13-E	METAL STAIR STRINGER- CHANNEL
05 51 13-F	METAL TREAD PAN AND RISER
05 51 13-G	CLIP PLATE
05 51 13-H	SUPPORT COLUMN - BY STAIR MANUFACTURER
05 52 13-A	1-1/4" I.D. ANODIZED ALUMINUM HANDRAIL
05 73 00-A	42" HIGH GLASS GUARDRAIL SYSTEM
05 73 00-B	1 1/4" I.D. STAINLESS STEEL HANDRAIL
05 73 00-C	ALUMINUM BASE SHOE WITH STAINLESS STEEL CLADDING
05 73 00-D	STAINLESS STEEL GLASS CAP
05 73 00-E	WOOD CAP RAIL - PROFILE AS SHOWN IN DRAWINGS
05 73 00-F	48" HIGH GLASS GUARDRAIL SYSTEM
05 73 00-G	2" SQUARE BRUSHED STAINLESS STEEL CAP RAIL
06 10 00-C	2X WOOD BLOCKING
06 16 00-A	5/8" EXTERIOR GRADE PLYWOOD
06 16 00-B	3/4" EXTERIOR GRADE PLYWOOD
06 16 43-A	5/8" EXTERIOR GYPSUM SHEATHING
06 40 23-A	1X HARDWOOD STAIR RISER - STAIN TO MATCH DOORS
06 40 23-B	2X HARDWOOD STAIR TREAD - SEE DETAILS FOR NOSING PROFILE - STAIN TO MATCH DOORS
06 40 23-C	ANTI-SLIP STAIR INSERT
06 40 23-D	PLASTIC LAMINATE ON 3/4" PARTICLEBOARD
06 40 23-E	2X HARDWOOD CAP - STAIN TO MATCH DOORS
06 40 23-F	METAL WRAPPED WOOD BENCH
07 13 26-A	SELF-ADHERING SHEET WATERPROOFING
07 13 26-B	MOLDED SHEET DRAINAGE PANEL
07 13 26-C	PROTECTION COURSE
07 21 00-A	SLAB PERIMETER RIGID INSULATION (R-15 FOR 24" HOIZONTAL R-10 TO TOP OF FOOTING OR 48" MAX VERTICAL)
07 21 00-C	3" CAVITY WALL EXTRUDED POLYSTYRENE INSULATION (R-16.8)
07 21 00-D	MINERAL WOOL BATT INSULATION
07 21 00-E	THERMALLY BROKEN COMPOSITE Z-GIRT @ 16" O.C. COORDINATE DIRECTION WITH METAL PANEL MANUFACTURER
07 25 00-A	WEATHER RESISTIVE BARRIERS- BUILDING WRAP
07 27 26-A	FLUID APPLIED MEMBRANE AIR BARRIER
07 42 13-A	FORMED METAL WALL PANEL
07 42 13-B	BRAKE METAL FLASHING/TRIM
07 42 13-C	METAL HAT CHANNEL (16 GA. MIN.) - SEE SECTIONS FOR DEPTH
07 42 43-A	COMPOSITE METAL WALL/SOFFIT PANEL
07 42 43-B	BRAKE METAL TRIM/FLASHING - COLOR AS SELECTED BY ARCHITECT
07 42 43-C	METAL HAT CHANNEL (16 GA. MIN.) - SEE SECTIONS FOR DEPTH
07 54 19-A	POLYVINYL CHLORIDE (PVC) MEMBRANE ROOFING SYSTEM
07 54 19-B	MEMBRANE ROOFING - EXTEND OVER AND ATTACH TO FRONT FACE OF PARAPET
07 54 19-C	1/2" COVER BOARD
07 54 19-D	TAPERED POLYISO INSULATION BOARD
07 54 19-E	2 LAYERS OF 2" POLYISO INSULATION BOARD (R-22.8)
07 54 19-F	2" POLYISO INSULATION BOARD (R-13)
07 62 00-A	TERMINATION BAR
07 71 00-A	MANUFACTURED COPING
07 71 00-B	MANUFACTURED DRIP EDGE / GRAVEL STOP
07 71 00-C	MANUFACTURED ROOF FASCIA
07 71 00-D	MANUFACTURED 2-PIECE COUNTERFLASHING SYSTEM
07 72 00-A	ROOF HATCH
07 76 00-A	PORCELAIN ROOF PAVERS ON ADJUSTABLE PEDESTALS
07 92 00-A	SEALANT
07 92 00-B	SEALANT EACH SIDE, TYPICAL
07 92 00-C	BACKER ROD AND SEALANT
07 92 00-D	BACKER ROD AND SEALANT EACH SIDE, TYPICAL
08 11 13-A	HOLLOW METAL DOOR/BORROWED LIGHT FRAME
08 11 13-B	GROUT SOLID
08 33 13-A	OVERHEAD COILING COUNTER DOOR
08 41 13-A	4 1/2" ALUMINUM-FRAMED STOREFRONT
08 41 13-B	WIDE STYLE ALUMINUM ENTRANCE DOOR
08 41 13-D	ALUMINUM BRAKE METAL FLASHING/TRIM TO MATCH STOREFRONT FRAME
08 41 13-E	2 1/2" X 2 1/2" ALUMINUM ANGLE CLOSURE. COLOR TO MATCH STOREFRONT
08 44 13-A	7 1/2" DEEP ALUMINUM CURTAINWALL SYSTEM
08 44 13-D	ALUMINUM BREAKMETAL FLASHING/TRIM TO MATCH CURTAINWALL FRAME
08 44 13-E	PRESSURE PLATE WITH MULLION CAP
08 80 00-A	GLAZING - SEE SCHEDULE/ELEVATIONS
09 22 16-D	2 1/2" STEEL STUD
09 22 16-E	3 5/8" STEEL STUD
09 22 16-F	6" STEEL STUD
09 22 16-G	METAL STUD KICKERS AS REQUIRED
09 29 00-A	5/8" GYPSUM WALL BOARD (SEE SPECS FOR TYPE)
09 29 00-C	SOUND ATTENUATION INSULATION
09 29 00-D	SUSPENDED GYPSUM BOARD CEILING ASSEMBLY
09 29 00-F	EXTRUDED ALUMINUM DRYWALL L-TRIM
09 29 00-G	EXTRUDED ALUMINUM 3/8" WIDE DRYWALL REVEAL
09 30 00-A	CERAMIC TILE
09 51 13-A	ACOUSTICAL CEILING SUSPENSION ASSEMBLY
09 54 26-A	WOOD GRILLE CEILING
09 64 66-A	WOOD ATHLETIC FLOORING SYSTEM
09 65 13-A	RESILIENT BASE
09 65 13-B	RESILIENT STAIR TREADS & RISERS
12 24 13-A	ROLLER WINDOW SHADES- SEE EQUIPMENT SCHEDULE
12 36 61-B	SOLID SURFACE
14 24 00-A	HYDRAULIC MRL ELEVATOR
14 24 00-B	ELEVATOR DOOR AND FRAME
14 24 00-C	PIT LADDER
14 24 00-D	ELEVATOR SILL
31 20 00-A	FINISH GRADE- SEE CIVIL SHEETS
31 20 00-B	COMPACTED EARTH
31 20 00-C	DRAINING GRANULAR FILL
32 13 13-A	SIDEWALK- SEE CIVIL SHEETS

BCSC TOGETHER WE LEARN

CSO
8831 Keystone Crossing, Indianapolis, IN 46240
317.848.7800 | csoinc.net

© 2025 CSO Architects, Inc. All Rights Reserved

Höweler+Yoon Architecture
617.517.4101 howeleryoon.com

PROJECT:
BARTHOLOMEW CONSOLIDATED SCHOOL CORPORATION
MAPLE GROVE ELEMENTARY
TIPTON LAKES BLVD, COLUMBUS, IN 47201

SCOPE DRAWINGS:
These drawings indicate the general scope of the project in terms of architectural design concept, the dimensions of the building, the major architectural elements and the type of structural, mechanical and electrical systems.
The drawings do not necessarily indicate or describe all work required for full performance and completion of the requirements of the Contract.
On the basis of the general scope indicated or described, the trade contractors shall furnish all items required for the proper execution and completion of the work.

REVISIONS:
2 ADDENDUM #2 06/17/2025

ISSUE DATE	DRAWN BY	CHECKED BY
05/30/2025	AEH	ECN

DRAWING TITLE:
ENLARGED PLAN DETAILS

CERTIFIED BY:
JAMES R. FUNK REGISTERED AR00900003 STATE OF INDIANA ARCHITECT

DRAWING NUMBER
A430

PROJECT NUMBER
2024022

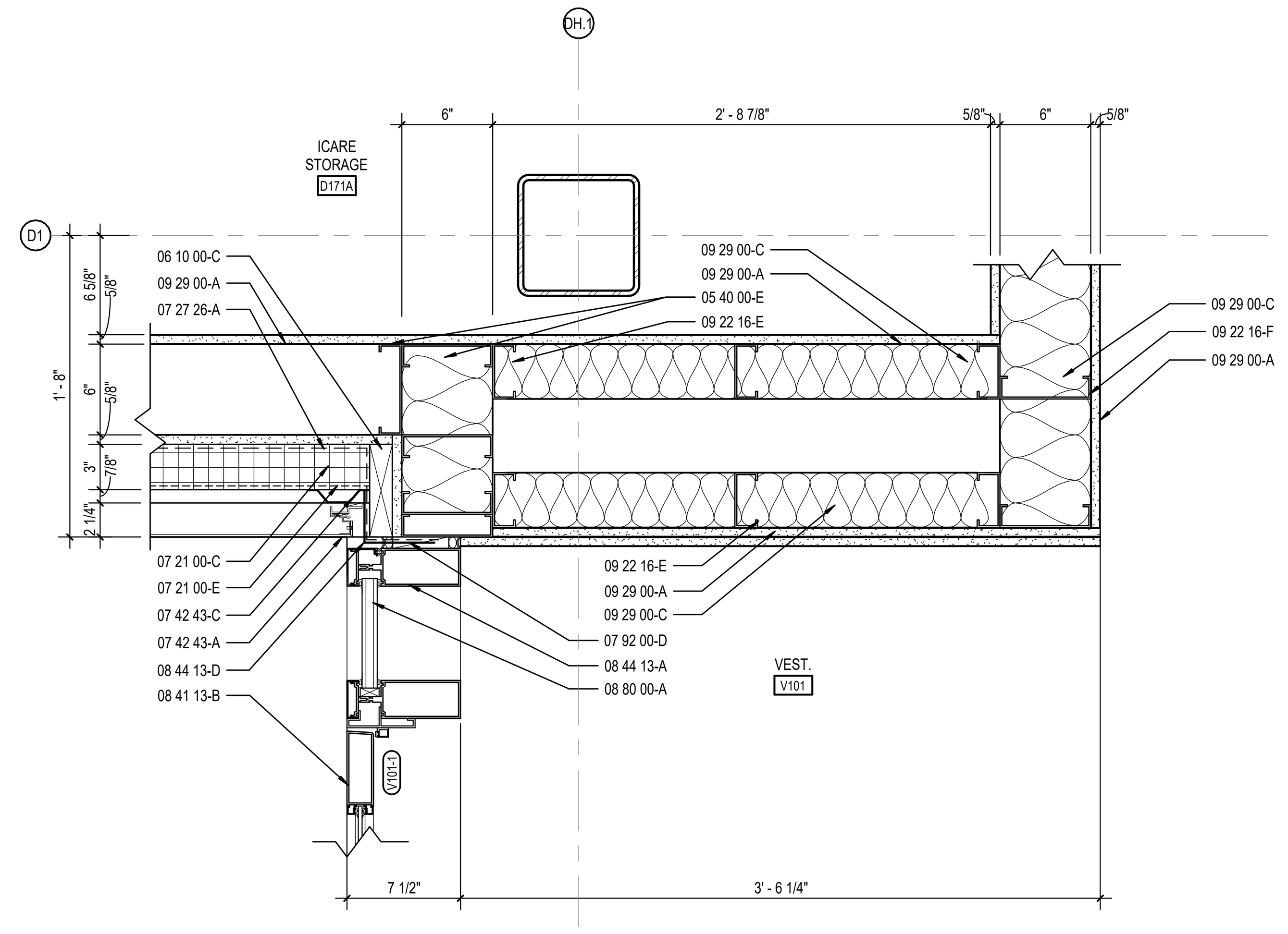

6
A431
ENLARGED PLAN DETAIL
SCALE: 1 1/2" = 1'-0"

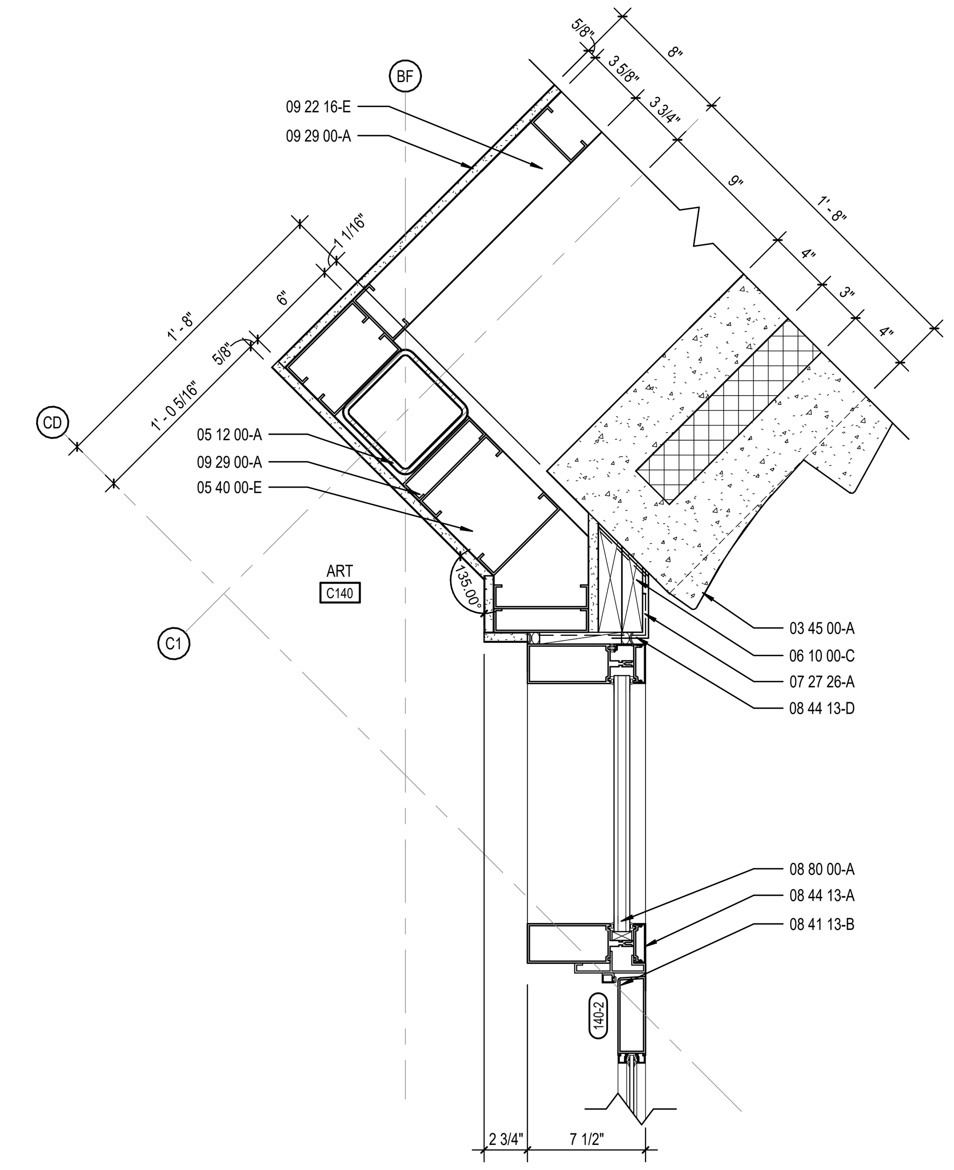

8
A431
ENLARGED PLAN DETAIL
SCALE: 1 1/2" = 1'-0"

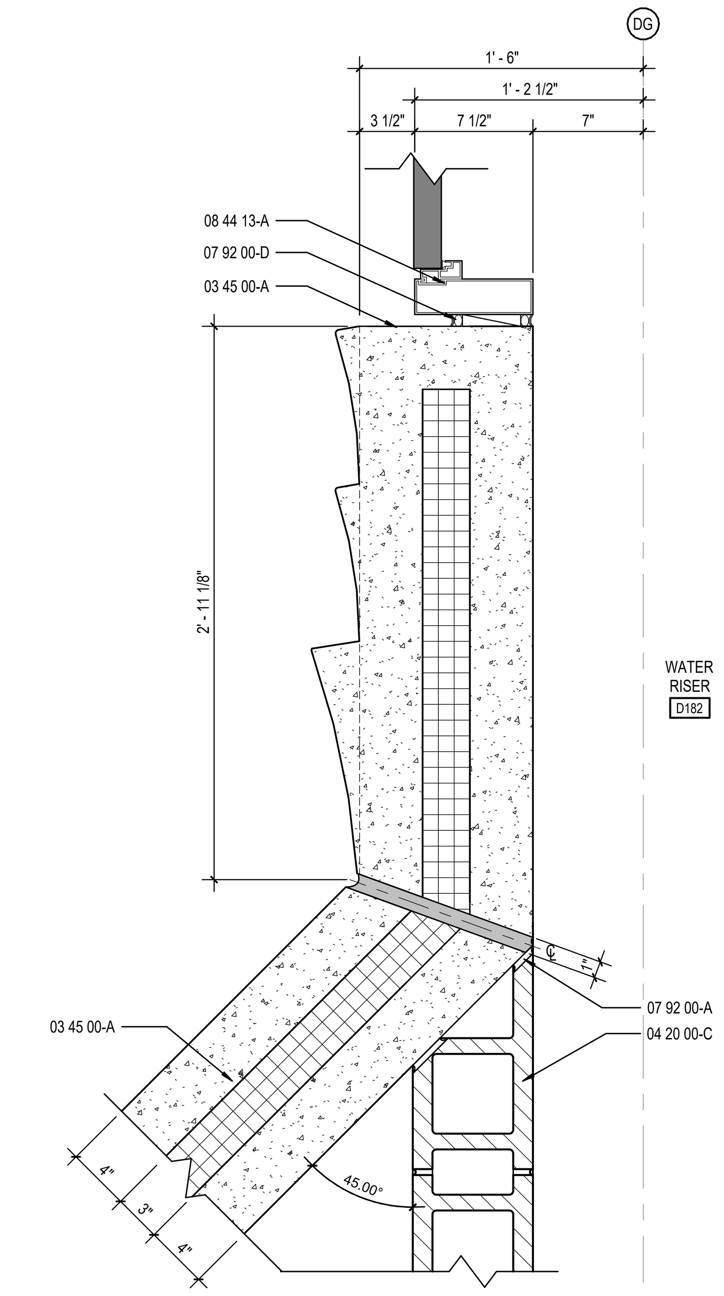

7
A431
ENLARGED PLAN DETAIL
SCALE: 1 1/2" = 1'-0"

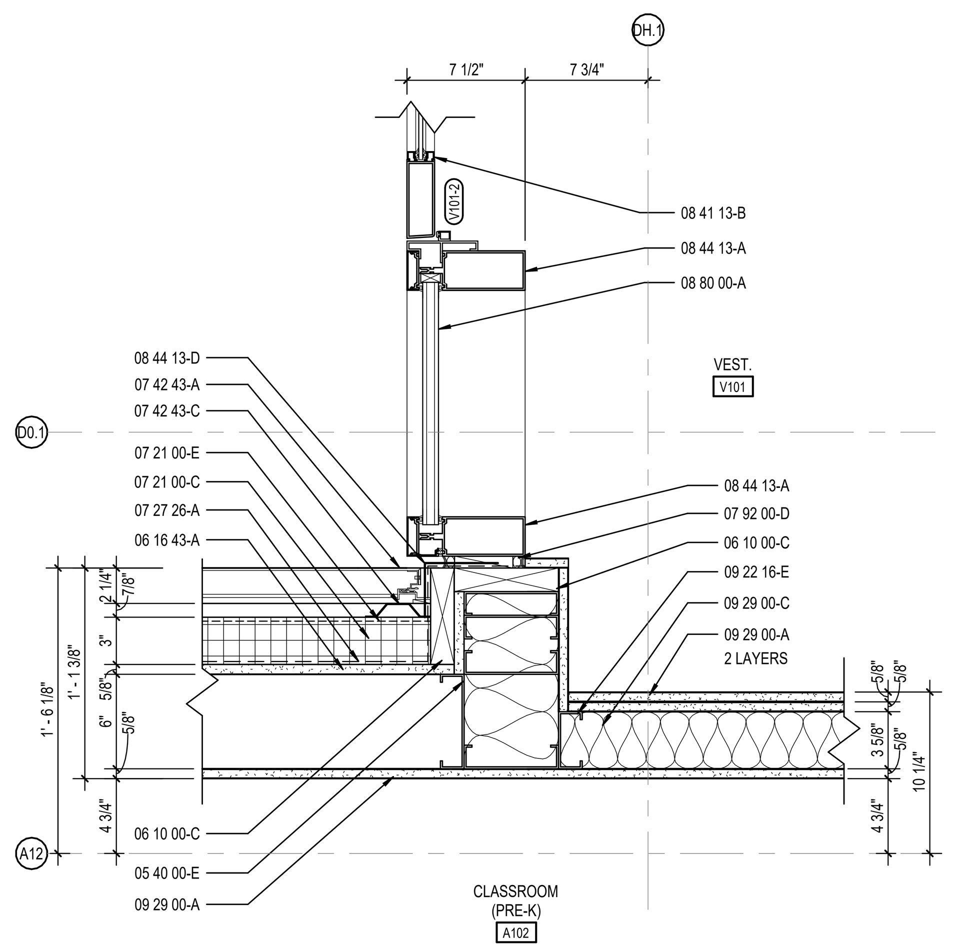

4
A431
ENLARGED PLAN DETAIL
SCALE: 1 1/2" = 1'-0"

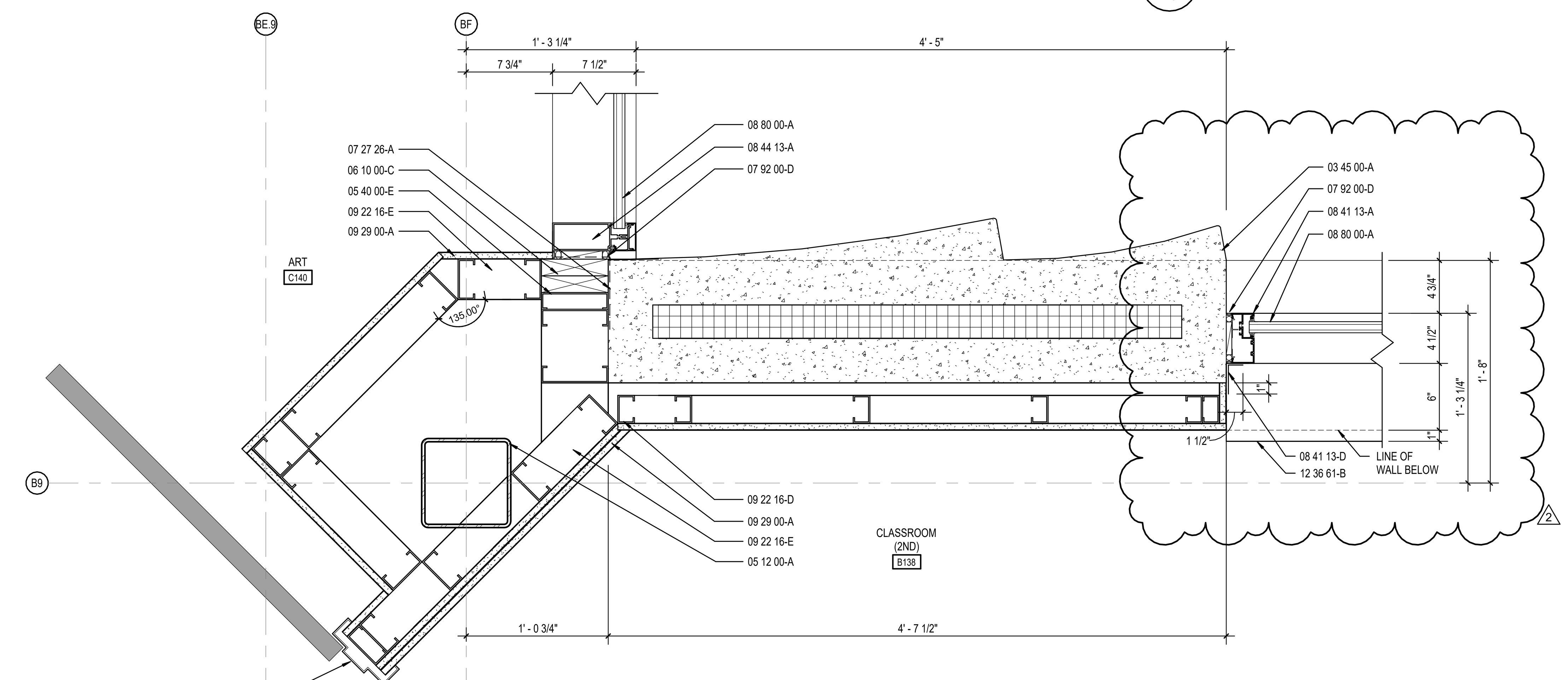

5
A431
ENLARGED PLAN DETAIL
SCALE: 1 1/2" = 1'-0"

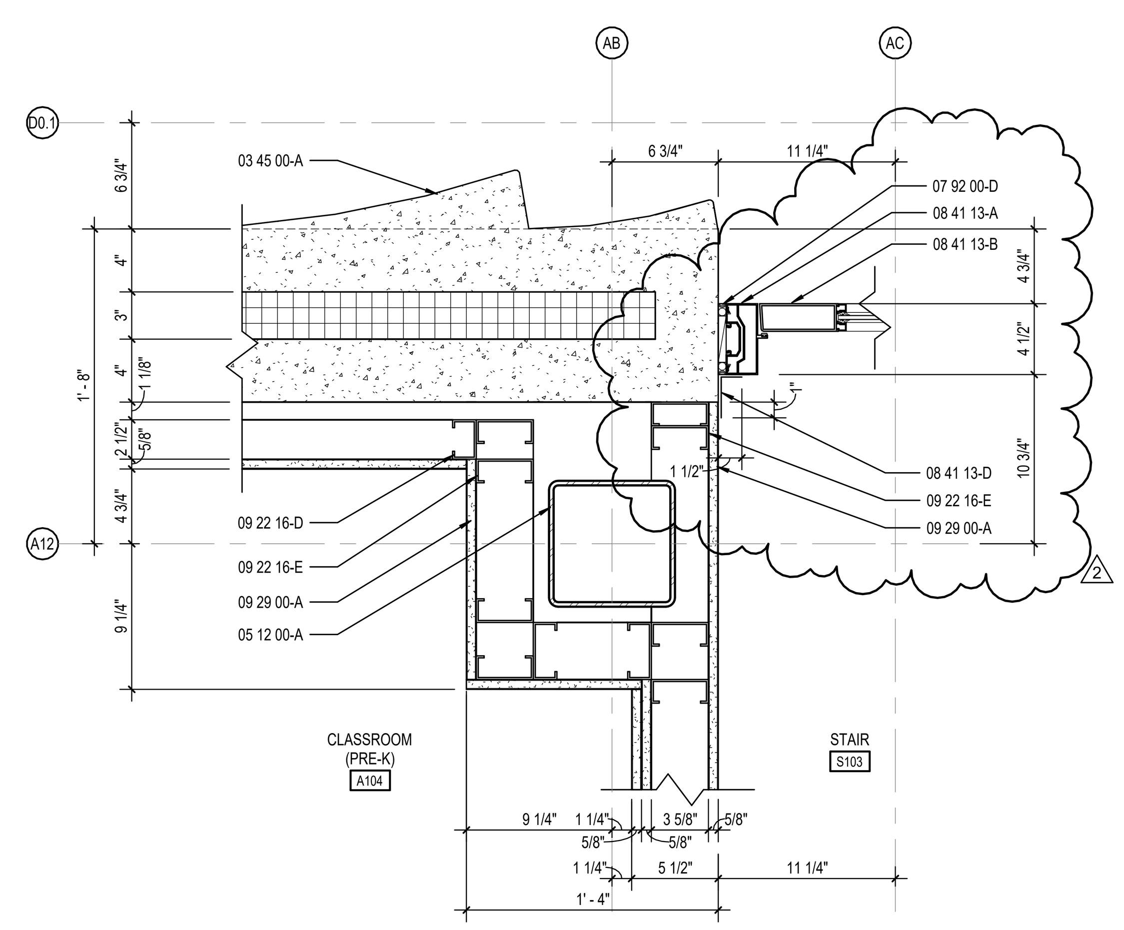

9
A431
ENLARGED PLAN DETAIL
SCALE: 1 1/2" = 1'-0"

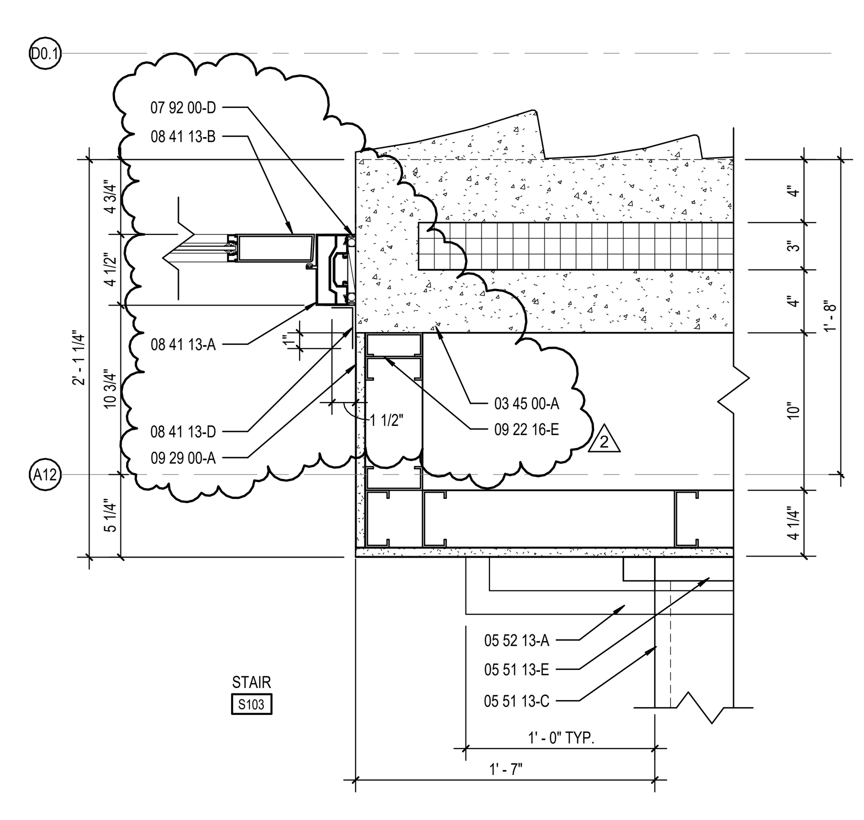

3
A431
ENLARGED PLAN DETAIL
SCALE: 1 1/2" = 1'-0"

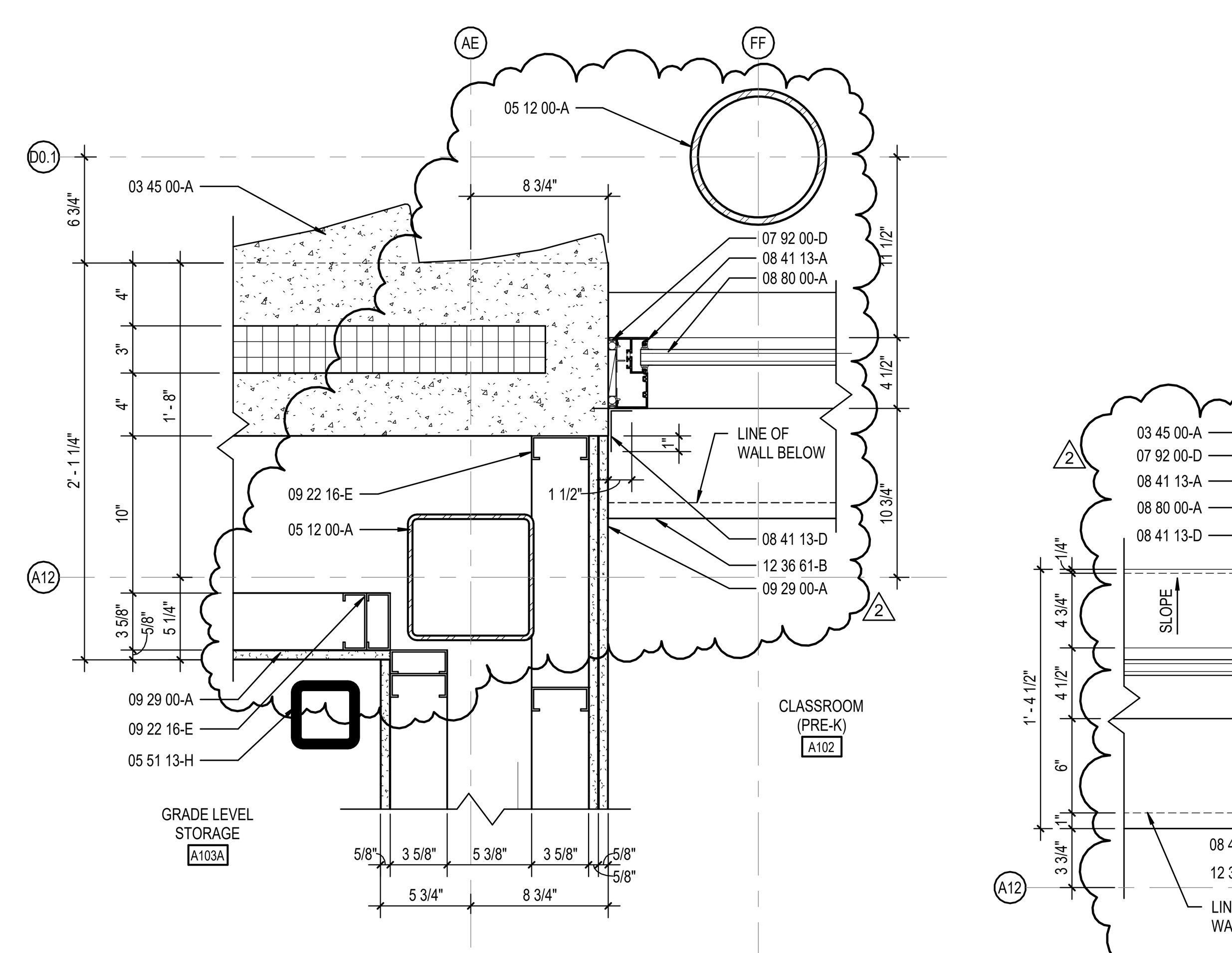

2
A431
ENLARGED PLAN DETAIL
SCALE: 1 1/2" = 1'-0"

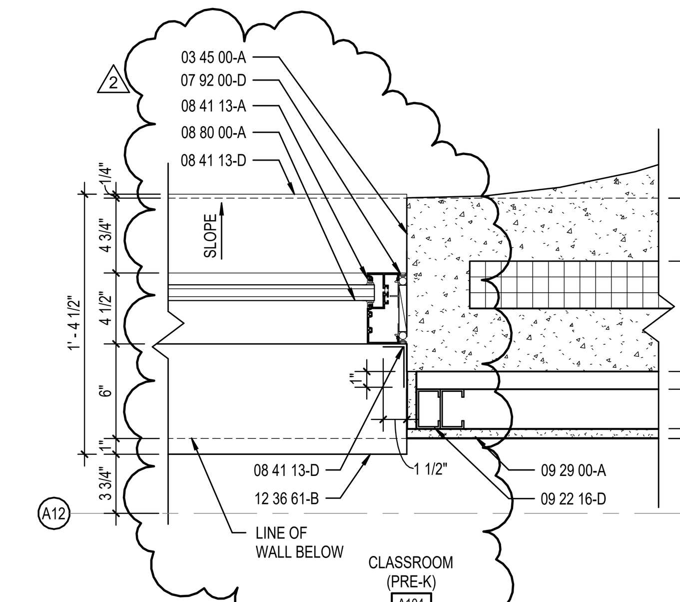

1
A431
ENLARGED PLAN DETAIL
SCALE: 1 1/2" = 1'-0"

KEYNOTE LEGEND

03 30 00-A	WATERSTOP
03 30 00-B	CONCRETE SLAB OVER VAPOR BARRIER ON DRAINAGE FILL. SEE STRUCTURAL
03 30 00-C	CONCRETE SLAB ON METAL DECK- SEE STRUCTURAL
03 30 00-D	CONCRETE FOUNDATION- SEE STRUCTURAL
03 30 00-E	CONCRETE FOOTING- SEE STRUCTURAL
03 45 00-A	ARCHITECTURAL PRECAST CONCRETE PANEL
03 45 00-C	CONNECTION BY PRECAST SUPPLIER
04 20 00-A	GROUT CORE SOLID
04 20 00-C	CONCRETE MASONRY UNIT
04 20 00-D	BULLNOSE UNIT
04 20 00-F	BOND BEAM MASONRY UNIT
04 20 00-L	8" CONCRETE MASONRY UNIT
04 20 00-M	10" CONCRETE MASONRY UNIT
05 12 00-A	STRUCTURAL STEEL FRAMING MEMBER- SEE STRUCTURAL
05 12 00-B	STEEL ANGLE- SEE STRUCTURAL
05 12 00-C	STEEL BENT PLATE- SEE STRUCTURAL
05 12 00-D	STEEL TUBE- SEE STRUCTURAL
05 21 00-A	STEEL JOIST- SEE STRUCTURAL
05 21 00-B	STEEL JOIST GIRDER- SEE STRUCTURAL
05 31 00-A	METAL ROOF DECKING- SEE STRUCTURAL
05 31 00-B	METAL FLOOR DECKING- SEE STRUCTURAL
05 40 00-A	7/8 16 GA. FURRING (HAT) CHANNEL
05 40 00-D	3 5/8 GALVANIZED STEEL STUDS (16 GA. MIN.)
05 40 00-E	6 GALVANIZED STEEL STUDS (16 GA. MIN.)
05 40 00-K	DIAGONAL BRACING AS REQUIRED
05 50 00-A	MISCELLANEOUS STEEL - SEE STRUCTURAL
05 50 00-B	PRE-MANUFACTURED ALUMINUM ACCESS LADDER
05 50 00-C	PRE-MANUFACTURED ALUMINUM SHIPS LADDER
05 50 00-D	ELEVATOR HOIST BEAM- COORDINATE WITH ELEVATOR MANUFACTURER
05 51 13-A	MANUFACTURED STEEL FRAMED STAIR
05 51 13-B	METAL PAN TREAD AND RISER
05 51 13-C	CONCRETE FILLED METAL PAN TREAD AND RISER
05 51 13-D	CONCRETE FILLED METAL PAN LANDING
05 51 13-E	METAL STAIR STRINGER- CHANNEL
05 51 13-F	METAL TREAD PAN AND RISER
05 51 13-G	CLIP PLATE
05 51 13-H	SUPPORT COLUMN - BY STAIR MANUFACTURER
05 52 13-A	1-1/4" I.D. ANODIZED ALUMINUM HANDRAIL
05 73 00-A	42" HIGH GLASS GUARDRAIL SYSTEM
05 73 00-B	1 1/4" I.D. STAINLESS STEEL HANDRAIL
05 73 00-C	ALUMINUM BASE SHOE WITH STAINLESS STEEL CLADDING
05 73 00-D	STAINLESS STEEL GLASS CAP
05 73 00-E	WOOD CAP RAIL - PROFILE AS SHOWN IN DRAWINGS
05 73 00-F	48" HIGH GLASS GUARDRAIL SYSTEM
05 73 00-G	2" SQUARE BRUSHED STAINLESS STEEL CAP RAIL
06 10 00-C	2X WOOD BLOCKING
06 16 00-A	5/8" EXTERIOR GRADE PLYWOOD
06 16 00-B	3/4" EXTERIOR GRADE PLYWOOD
06 16 43-A	5/8" EXTERIOR GYPSUM SHEATHING
06 40 23-A	1X HARDWOOD STAIR RISER - STAIN TO MATCH DOORS
06 40 23-B	2X HARDWOOD STAIR TREAD - SEE DETAILS FOR NOSING PROFILE - STAIN TO MATCH DOORS
06 40 23-C	ANTI-SLIP STAIR INSERT
06 40 23-D	PLASTIC LAMINATE ON 3/4" PARTICLEBOARD
06 40 23-E	2X HARDWOOD CAP - STAIN TO MATCH DOORS
06 40 23-F	METAL WRAPPED WOOD BENCH
07 13 26-A	SELF-ADHERING SHEET WATERPROOFING
07 13 26-B	MOLDED SHEET DRAINAGE PANEL
07 13 26-C	PROTECTION COURSE
07 21 00-A	SLAB PERIMETER RIGID INSULATION (R-15 FOR 24" HOIZONTAL R-10 TO TOP OF FOOTING OR 48" MAX VERTICAL)
07 21 00-C	3" CAVITY WALL EXTRUDED POLYSTYRENE INSULATION (R-16.8)
07 21 00-D	MINERAL WOOL BATT INSULATION
07 21 00-E	THERMALLY BROKEN COMPOSITE Z-GIRT @ 16" O.C. COORDINATE DIRECTION WITH METAL PANEL MANUFACTURER
07 25 00-A	WEATHER RESISTIVE BARRIERS- BUILDING WRAP
07 27 26-A	FLUID APPLIED MEMBRANE AIR BARRIER
07 42 13-A	FORMED METAL WALL PANEL
07 42 13-B	BRAKE METAL FLASHING/TRIM
07 42 13-C	METAL HAT CHANNEL (16 GA. MIN.) - SEE SECTIONS FOR DEPTH
07 42 43-A	COMPOSITE METAL WALL/SOFFIT PANEL
07 42 43-B	BRAKE METAL TRIM/FLASHING - COLOR AS SELECTED BY ARCHITECT
07 42 43-C	METAL HAT CHANNEL (16 GA. MIN.) - SEE SECTIONS FOR DEPTH
07 54 19-A	POLYVINYL CHLORIDE (PVC) MEMBRANE ROOFING SYSTEM
07 54 19-B	MEMBRANE ROOFING - EXTEND OVER AND ATTACH TO FRONT FACE OF PARAPET
07 54 19-C	1/2" COVER BOARD
07 54 19-D	TAPERED POLYISO INSULATION BOARD
07 54 19-E	2 LAYERS OF 2" POLYISO INSULATION BOARD (R-22.8)
07 54 19-F	2" POLYISO INSULATION BOARD (R-13)
07 62 00-A	TERMINATION BAR
07 71 00-A	MANUFACTURED COPING
07 71 00-B	MANUFACTURED DRIP EDGE / GRAVEL STOP
07 71 00-C	MANUFACTURED ROOF FASCIA
07 71 00-D	MANUFACTURED 2-PIECE COUNTERFLASHING SYSTEM
07 72 00-A	ROOF HATCH
07 76 00-A	PORCELAIN ROOF PAVERS ON ADJUSTABLE PEDESTALS
07 92 00-A	SEALANT
07 92 00-B	SEALANT EACH SIDE, TYPICAL
07 92 00-C	BACKER ROD AND SEALANT
07 92 00-D	BACKER ROD AND SEALANT EACH SIDE, TYPICAL
08 11 13-A	HOLLOW METAL DOOR/BORROWED LIGHT FRAME
08 11 13-B	GROUT SOLID
08 33 13-A	OVERHEAD COILING COUNTER DOOR
08 41 13-A	4 1/2" ALUMINUM-FRAMED STOREFRONT
08 41 13-B	WIDE STYLE ALUMINUM ENTRANCE DOOR
08 41 13-D	ALUMINUM BRAKE METAL FLASHING/TRIM TO MATCH STOREFRONT FRAME
08 41 13-E	2 1/2" X 2 1/2" ALUMINUM ANGLE CLOSURE. COLOR TO MATCH STOREFRONT
08 44 13-A	7 1/2" DEEP ALUMINUM CURTAINWALL SYSTEM
08 44 13-D	ALUMINUM BREAKMETAL FLASHING/TRIM TO MATCH CURTAINWALL FRAME
08 44 13-E	PRESSURE PLATE WITH MULLION CAP
08 80 00-A	GLAZING - SEE SCHEDULE/ELEVATIONS
09 22 16-D	2 1/2" STEEL STUD
09 22 16-E	3 5/8" STEEL STUD
09 22 16-F	6" STEEL STUD
09 22 16-G	METAL STUD KICKERS AS REQUIRED
09 29 00-A	5/8" GYPSUM WALL BOARD (SEE SPECS FOR TYPE)
09 29 00-C	SOUND ATTENUATION INSULATION
09 29 00-D	SUSPENDED GYPSUM BOARD CEILING ASSEMBLY
09 29 00-F	EXTRUDED ALUMINUM DRYWALL L-TRIM
09 29 00-G	EXTRUDED ALUMINUM 3/8" WIDE DRYWALL REVEAL
09 30 00-A	CERAMIC TILE
09 51 13-A	ACOUSTICAL CEILING SUSPENSION ASSEMBLY
09 54 26-A	WOOD GRILLE CEILING
09 64 66-A	WOOD ATHLETIC FLOORING SYSTEM
09 65 13-A	RESILIENT BASE
09 65 13-B	RESILIENT STAIR TREADS & RISERS
12 24 13-A	ROLLER WINDOW SHADES- SEE EQUIPMENT SCHEDULE
12 36 61-B	SOLID SURFACE
14 24 00-A	HYDRAULIC MRL ELEVATOR
14 24 00-B	ELEVATOR DOOR AND FRAME
14 24 00-C	PIT LADDER
14 24 00-D	ELEVATOR SILL
31 20 00-A	FINISH GRADE- SEE CIVIL SHEETS
31 20 00-B	COMPACTED EARTH
31 20 00-C	DRAINING GRANULAR FILL
32 13 13-A	SIDEWALK- SEE CIVIL SHEETS

BCSC
TOGETHER WE LEARN

CSO
8831 Keystone Crossing, Indianapolis, IN 46240
317.848.7800 | csoinc.net
© 2025 CSO Architects, Inc. All Rights Reserved

Höweler+Yoon Architecture
617.517.4101 howeleryoon.com

PROJECT:
BARTHOLOMEW CONSOLIDATED SCHOOL CORPORATION
MAPLE GROVE ELEMENTARY
TIPTON LAKES BLVD, COLUMBUS, IN 47201

SCOPE DRAWINGS:
These drawings indicate the general scope of the project in terms of architectural design concept, the dimensions of the building, the major architectural elements and the type of structural, mechanical and electrical systems.
The drawings do not necessarily indicate or describe all work required for full performance and completion of the requirements of the Contract.
On the basis of the general scope indicated or described, the trade contractors shall furnish all items required for the proper execution and completion of the work.

REVISIONS:
2 ADDENDUM #2 06/17/2025

ISSUE DATE	DRAWN BY	CHECKED BY
05/30/2025	AEH	ECN

DRAWING TITLE:
ENLARGED PLAN DETAILS

CERTIFIED BY:
JAMES R. FUNK REGISTERED AR00900003 STATE OF INDIANA ARCHITECT

DRAWING NUMBER
A431

PROJECT NUMBER
2024022

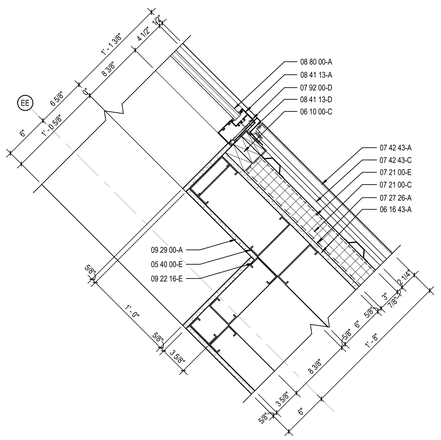

5 A432 ENLARGED PLAN DETAIL
SCALE: 1 1/2" = 1'-0"

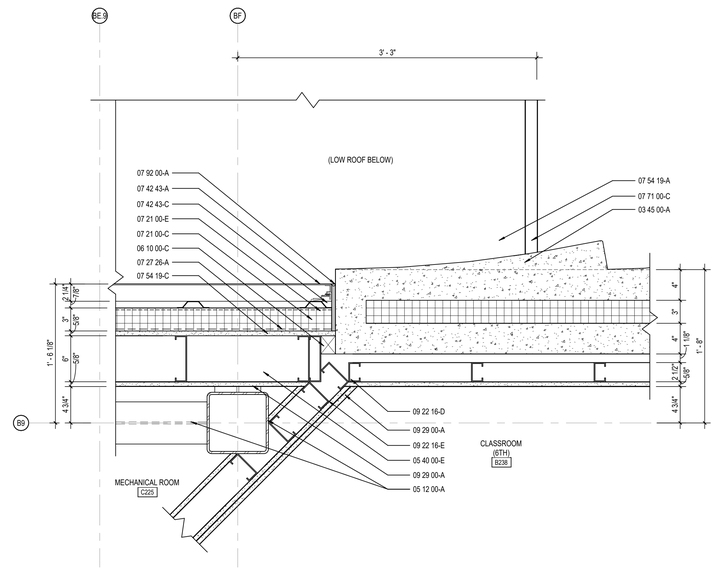

4 A432 ENLARGED PLAN DETAIL
SCALE: 1 1/2" = 1'-0"

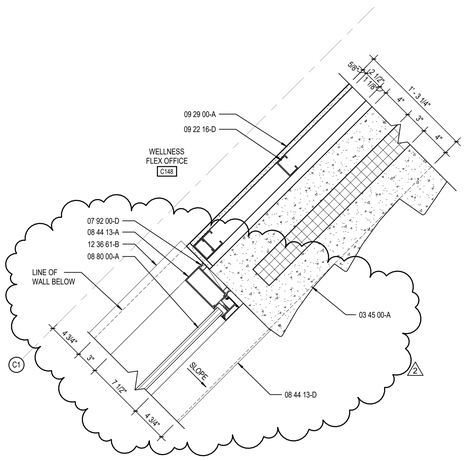

3 A432 ENLARGED PLAN DETAIL
SCALE: 1 1/2" = 1'-0"

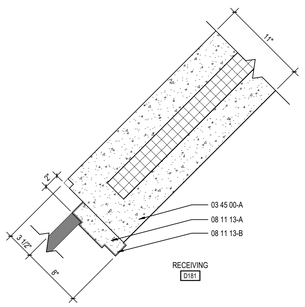

2 A432 ENLARGED PLAN DETAIL
SCALE: 1 1/2" = 1'-0"

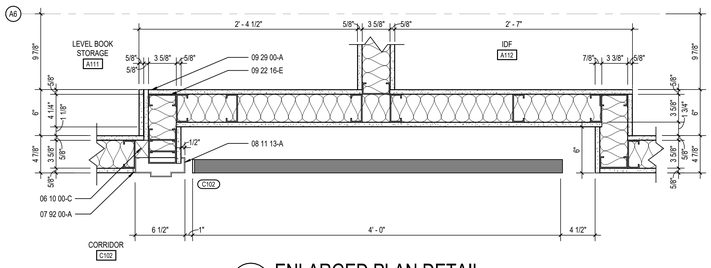

1 A432 ENLARGED PLAN DETAIL
SCALE: 1 1/2" = 1'-0"

KEYNOTE LEGEND

03 30 00-A	WATERSTOP
03 30 00-B	CONCRETE SLAB OVER VAPOR BARRIER ON DRAINAGE FILL. SEE STRUCTURAL
03 30 00-C	CONCRETE SLAB ON METAL DECK- SEE STRUCTURAL
03 30 00-D	CONCRETE FOUNDATION- SEE STRUCTURAL
03 30 00-E	CONCRETE FOOTING- SEE STRUCTURAL
03 45 00-A	ARCHITECTURAL PRECAST CONCRETE PANEL
03 45 00-C	CONNECTION BY PRECAST SUPPLIER
04 20 00-A	GROUT CORE SOLID
04 20 00-C	CONCRETE MASONRY UNIT
04 20 00-D	BULLNOSE UNIT
04 20 00-F	BOND BEAM MASONRY UNIT
04 20 00-L	8" CONCRETE MASONRY UNIT
04 20 00-M	10" CONCRETE MASONRY UNIT
05 12 00-A	STRUCTURAL STEEL FRAMING MEMBER- SEE STRUCTURAL
05 12 00-B	STEEL ANGLE- SEE STRUCTURAL
05 12 00-C	STEEL BENT PLATE- SEE STRUCTURAL
05 12 00-D	STEEL TUBE- SEE STRUCTURAL
05 21 00-A	STEEL JOIST- SEE STRUCTURAL
05 21 00-B	STEEL JOIST GIRDER- SEE STRUCTURAL
05 31 00-A	METAL ROOF DECKING- SEE STRUCTURAL
05 31 00-B	METAL FLOOR DECKING- SEE STRUCTURAL
05 40 00-A	7/8 16 GA. FURRING (HAT) CHANNEL
05 40 00-D	3 5/8 GALVANIZED STEEL STUDS (16 GA. MIN.)
05 40 00-E	6 GALVANIZED STEEL STUDS (16 GA. MIN.)
05 40 00-K	DIAGONAL BRACING AS REQUIRED
05 50 00-A	MISCELLANEOUS STEEL - SEE STRUCTURAL
05 50 00-B	PRE-MANUFACTURED ALUMINUM ACCESS LADDER
05 50 00-C	PRE-MANUFACTURED ALUMINUM SHIPS LADDER
05 50 00-D	ELEVATOR HOIST BEAM- COORDINATE WITH ELEVATOR MANUFACTURER
05 51 13-A	MANUFACTURED STEEL FRAMED STAIR
05 51 13-B	METAL PAN TREAD AND RISER
05 51 13-C	CONCRETE FILLED METAL PAN TREAD AND RISER
05 51 13-D	CONCRETE FILLED METAL PAN LANDING
05 51 13-E	METAL STAIR STRINGER- CHANNEL
05 51 13-F	METAL TREAD PAN AND RISER
05 51 13-G	CLIP PLATE
05 51 13-H	SUPPORT COLUMN - BY STAIR MANUFACTURER
05 52 13-A	1-1/4" I.D. ANODIZED ALUMINUM HANDRAIL
05 73 00-A	42" HIGH GLASS GUARDRAIL SYSTEM
05 73 00-B	1 1/4" I.D. STAINLESS STEEL HANDRAIL
05 73 00-C	ALUMINUM BASE SHOE WITH STAINLESS STEEL CLADDING
05 73 00-D	STAINLESS STEEL GLASS CAP
05 73 00-E	WOOD CAP RAIL - PROFILE AS SHOWN IN DRAWINGS
05 73 00-F	48" HIGH GLASS GUARDRAIL SYSTEM
05 73 00-G	2" SQUARE BRUSHED STAINLESS STEEL CAP RAIL
06 10 00-C	2X WOOD BLOCKING
06 16 00-A	5/8" EXTERIOR GRADE PLYWOOD
06 16 00-B	3/4" EXTERIOR GRADE PLYWOOD
06 16 43-A	5/8" EXTERIOR GYPSUM SHEATHING
06 40 23-A	1X HARDWOOD STAIR RISER - STAIN TO MATCH DOORS
06 40 23-B	2X HARDWOOD STAIR TREAD - SEE DETAILS FOR NOSING PROFILE - STAIN TO MATCH DOORS
06 40 23-C	ANTI-SLIP STAIR INSERT
06 40 23-D	PLASTIC LAMINATE ON 3/4" PARTICLEBOARD
06 40 23-E	2X HARDWOOD CAP - STAIN TO MATCH DOORS
06 40 23-F	METAL WRAPPED WOOD BENCH
07 13 26-A	SELF-ADHERING SHEET WATERPROOFING
07 13 26-B	MOLDED SHEET DRAINAGE PANEL
07 13 26-C	PROTECTION COURSE
07 21 00-A	SLAB PERIMETER RIGID INSULATION (R-15 FOR 24" HOIZONTAL R-10 TO TOP OF FOOTING OR 48" MAX VERTICAL)
07 21 00-C	3" CAVITY WALL EXTRUDED POLYSTYRENE INSULATION (R-16.8)
07 21 00-D	MINERAL WOOL BATT INSULATION
07 21 00-E	THERMALLY BROKEN COMPOSITE Z-GIRT @ 16" O.C. COORDINATE DIRECTION WITH METAL PANEL MANUFACTURER
07 25 00-A	WEATHER RESISTIVE BARRIERS- BUILDING WRAP
07 27 26-A	FLUID APPLIED MEMBRANE AIR BARRIER
07 42 13-A	FORMED METAL WALL PANEL
07 42 13-B	BRAKE METAL FLASHING/TRIM
07 42 13-C	METAL HAT CHANNEL (16 GA. MIN.) - SEE SECTIONS FOR DEPTH
07 42 43-A	COMPOSITE METAL WALL/SOFFIT PANEL
07 42 43-B	BRAKE METAL TRIM/FLASHING - COLOR AS SELECTED BY ARCHITECT
07 42 43-C	METAL HAT CHANNEL (16 GA. MIN.) - SEE SECTIONS FOR DEPTH
07 54 19-A	POLYVINYL CHLORIDE (PVC) MEMBRANE ROOFING SYSTEM
07 54 19-B	MEMBRANE ROOFING - EXTEND OVER AND ATTACH TO FRONT FACE OF PARAPET
07 54 19-C	1/2" COVER BOARD
07 54 19-D	TAPERED POLYISO INSULATION BOARD
07 54 19-E	2 LAYERS OF 2" POLYISO INSULATION BOARD (R-22.8)
07 54 19-F	2" POLYISO INSULATION BOARD (R-13)
07 62 00-A	TERMINATION BAR
07 71 00-A	MANUFACTURED COPING
07 71 00-B	MANUFACTURED DRIP EDGE / GRAVEL STOP
07 71 00-C	MANUFACTURED ROOF FASCIA
07 71 00-D	MANUFACTURED 2-PIECE COUNTERFLASHING SYSTEM
07 72 00-A	ROOF HATCH
07 76 00-A	PORCELAIN ROOF PAVERS ON ADJUSTABLE PEDESTALS
07 92 00-A	SEALANT
07 92 00-B	SEALANT EACH SIDE, TYPICAL
07 92 00-C	BACKER ROD AND SEALANT
07 92 00-D	BACKER ROD AND SEALANT EACH SIDE, TYPICAL
08 11 13-A	HOLLOW METAL DOOR/BORROWED LIGHT FRAME
08 11 13-B	GROUT SOLID
08 33 13-A	OVERHEAD COILING COUNTER DOOR
08 41 13-A	4 1/2" ALUMINUM-FRAMED STOREFRONT
08 41 13-B	WIDE STYLE ALUMINUM ENTRANCE DOOR
08 41 13-D	ALUMINUM BRAKE METAL FLASHING/TRIM TO MATCH STOREFRONT FRAME
08 41 13-E	2 1/2" X 2 1/2" ALUMINUM ANGLE CLOSURE. COLOR TO MATCH STOREFRONT
08 44 13-A	7 1/2" DEEP ALUMINUM CURTAINWALL SYSTEM
08 44 13-D	ALUMINUM BREAKMETAL FLASHING/TRIM TO MATCH CURTAINWALL FRAME
08 44 13-E	PRESSURE PLATE WITH MULLION CAP
08 80 00-A	GLAZING - SEE SCHEDULE/ELEVATIONS
09 22 16-D	2 1/2" STEEL STUD
09 22 16-E	3 5/8" STEEL STUD
09 22 16-F	6" STEEL STUD
09 22 16-G	METAL STUD KICKERS AS REQUIRED
09 29 00-A	5/8" GYPSUM WALL BOARD (SEE SPECS FOR TYPE)
09 29 00-C	SOUND ATTENUATION INSULATION
09 29 00-D	SUSPENDED GYPSUM BOARD CEILING ASSEMBLY
09 29 00-F	EXTRUDED ALUMINUM DRYWALL L-TRIM
09 29 00-G	EXTRUDED ALUMINUM 3/8" WIDE DRYWALL REVEAL
09 30 00-A	CERAMIC TILE
09 51 13-A	ACOUSTICAL CEILING SUSPENSION ASSEMBLY
09 54 26-A	WOOD GRILLE CEILING
09 64 66-A	WOOD ATHLETIC FLOORING SYSTEM
09 65 13-A	RESILIENT BASE
09 65 13-B	RESILIENT STAIR TREADS & RISERS
12 24 13-A	ROLLER WINDOW SHADES- SEE EQUIPMENT SCHEDULE
12 36 61-B	SOLID SURFACE
14 24 00-A	HYDRAULIC MRL ELEVATOR
14 24 00-B	ELEVATOR DOOR AND FRAME
14 24 00-C	PIT LADDER
14 24 00-D	ELEVATOR SILL
31 20 00-A	FINISH GRADE- SEE CIVIL SHEETS
31 20 00-B	COMPACTED EARTH
31 20 00-C	DRAINING GRANULAR FILL
32 13 13-A	SIDEWALK- SEE CIVIL SHEETS

BCSC
TOGETHER WE LEARN

CSO
8831 Keystone Crossing, Indianapolis, IN 46240
317.848.7800 | csoinc.net

© 2025 CSO Architects, Inc. All Rights Reserved

Howeler+Yoon Architecture
617.517.4101 howeleryoon.com

PROJECT:
BARTHOLOMEW CONSOLIDATED SCHOOL CORPORATION
MAPLE GROVE ELEMENTARY
TIPTON LAKES BLVD, COLUMBUS, IN 47201

SCOPE DRAWINGS:
These drawings indicate the general scope of the project in terms of architectural design concept, the dimensions of the building, the general construction materials and the type of structural, mechanical and electrical systems.
The drawings do not necessarily indicate or describe all items required for the complete execution and completion of the requirements of the Contract.
On the basis of the general scope indicated or described, the trade contractors shall furnish all items required for the proper execution and completion of the work.

REVISIONS:

2	ADDENDUM #2	06/17/2025

ISSUE DATE	DRAWN BY	CHECKED BY
05/30/2025	AEH	ECN

DRAWING TITLE:
ENLARGED PLAN DETAILS

CERTIFIED BY:
JAMES R. FUNK
REGISTERED
AR0900003
STATE OF
INDIANA
ARCHITECT

DRAWING NUMBER
A432

PROJECT NUMBER
2024022

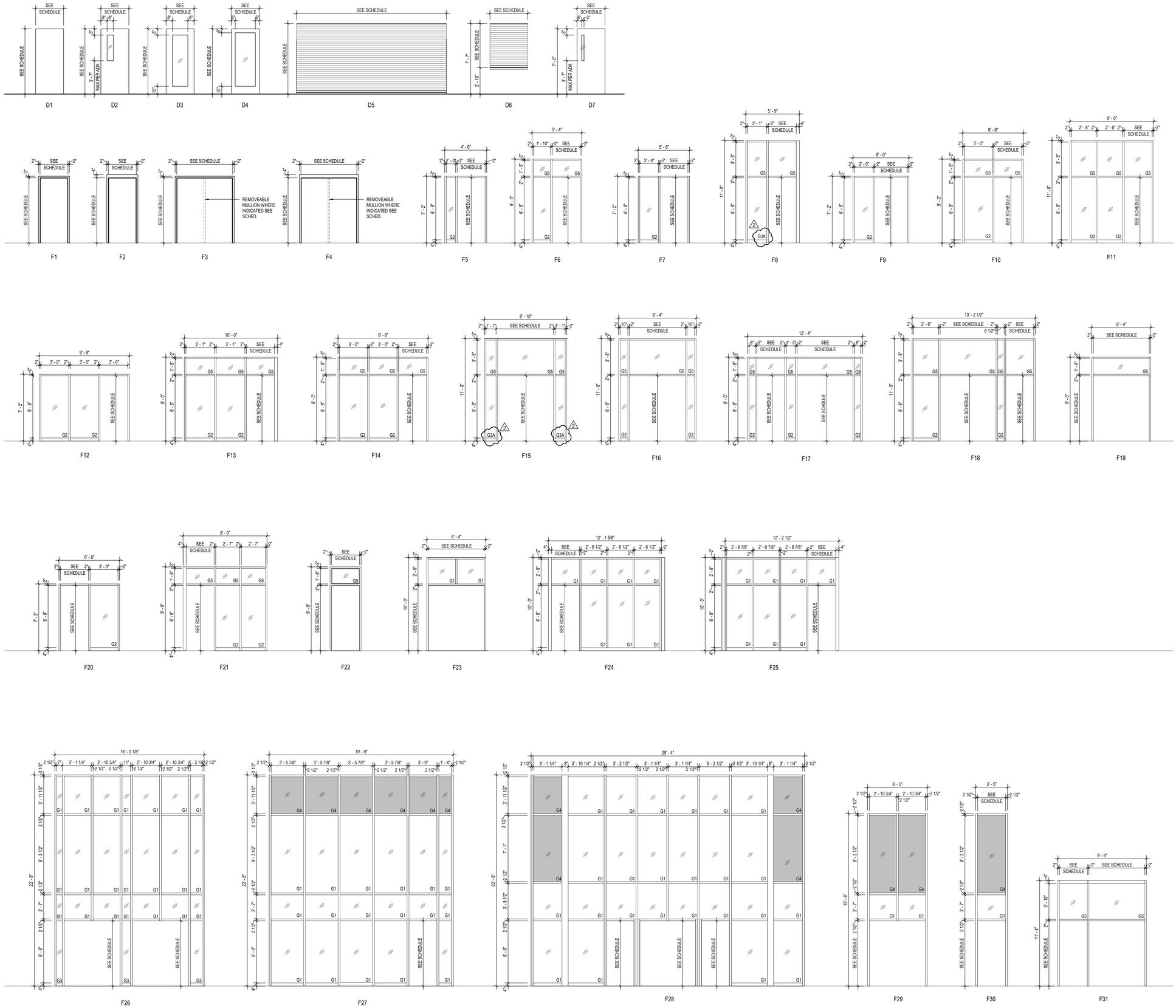

GENERAL DOOR/WINDOW NOTES

A. THESE GENERAL NOTES APPLY TO THE DOOR SCHEDULE.
B. DOOR AND FRAME NUMBERS CORRESPOND TO RESPECTIVE ROOM NUMBER. IN ROOMS WITH MULTIPLE OPENINGS, A NUMERICAL SUFFIX HAS BEEN ADDED TO DOOR NUMBERS.
C. VERTICAL FRAMING MEMBERS AT ALL DOOR FRAMES SHALL EXTEND TO STRUCTURE ABOVE.
D. UNDERCUT ALL DOORS AS REQUIRED BY FINAL FINISH.
E. PROVIDE CONTINUOUS SEALANT BETWEEN HOLLOW METAL FRAME PERIMETERS AND SURROUNDING WALL CONSTRUCTION.
F. PROVIDE CONTINUOUS SEALANT BETWEEN INTERIOR AND EXTERIOR WINDOW, CURTAINWALL AND STOREFRONT FRAME PERIMETERS AND SURROUNDING CONSTRUCTION UNLESS NOTED OTHERWISE.
G. GROUT FULL HOLLOW METAL FRAMES IN MASONRY CONSTRUCTION.
H. SPOT GROUT HOLLOW METAL FRAMES IN GYPSUM WALLS.
I. WHERE A FIRE RATING IS INDICATED ON THE DOOR SCHEDULE, HARDWARE AND DOOR ASSEMBLY COMPONENTS SHALL MEET THE REQUIREMENTS OF THAT LABEL.
J. WHERE AN STC RATING IS INDICATED ON THE DOOR SCHEDULE, HARDWARE AND DOOR ASSEMBLY COMPONENTS SHALL MEET THE REQUIREMENTS OF THAT LABEL.
K. INSTALL DOOR GLASS USING WET GLAZING METHOD.
L. ALL LINTELS ABOVE EXTERIOR OPENINGS SHALL BE GALVANIZED.
M. REFER TO SHEETS A503 & A504 FOR ADDITIONAL DOOR, FRAME AND BORROWED LITE ELEVATIONS.
N. COORDINATE THROAT OPENINGS WITH WALL WIDTH FOR ALL WRAP AROUND FRAMES.
O. SCHEDULED HARDWARE FOR ALUMINUM DOORS SHALL BE PROVIDED BY HARDWARE SUPPLIER AND INSTALLED BY ALUMINUM SUPPLIER. ALUMINUM DOORS TO BE PREPARED BY ALUMINUM DOOR SUPPLIER IN ACCORDANCE WITH THE SCHEDULED HARDWARE.
P. ALL NEW HOLLOW METAL DOORS, FRAMES AND BORROWED LITE FRAMES TO BE PAINTED AS INDICATED ON THE A800 SERIES FINISH PLANS. SEE FINISH PLANS FOR WOOD DOOR FINISHES.
Q. PROVIDE SILENCERS ON ALL DOOR FRAMES.
R. SEE STRUCTURAL DRAWINGS FOR REQUIREMENTS FOR MASONRY AND STEEL LINTELS. PROVIDE STRUCTURAL STEEL LINTELS AT OPENINGS OPENINGS WHERE INDICATED ON THE STRUCTURAL STEEL DRAWINGS IN LIEU OF MASONRY LINTEL AS SHOWN IN THESE DETAILS.
S. VERIFY ALL EXISTING CONDITIONS AND DIMENSIONS IN THE FIELD PRIOR TO FABRICATION OF DOORS AND FRAMES. BRING DISCREPANCIES TO THE ATTENTION OF THE ARCHITECT.
T. EXTERIOR ALUMINUM DOORS AND FRAMES TO BE BLACK ANODIZED ALUMINUM.
U. INTERIOR ALUMINUM DOORS AND FRAMES TO BE CLEAR ANODIZED ALUMINUM.

REMARKS

1. CASED DOOR FRAME, NO RABBET REQUIRED.
2. OCD / OHCD TO BE ELECTRICALLY POWERED. SEE ELECTRICAL DRAWINGS FOR MORE INFORMATION.
3. 180 DEGREE HINGE.
4. SEE 1/A405 FOR WALL SECTION. COORDINATE WITH FOOD SERVICE EQUIPMENT.
5. THIS DOOR TO RECIEVE GYM WALL PADDING. PROVIDE CUTOUTS FOR VISION PANELS WHERE APPLICABLE. SEE A900 SERIES DRAWINGS AND SPEC SECTION 11 66 23 FOR MORE INFORMATION.

GLASS SCHEDULE

G1 - 1" THICK LAMINATED, LOW E, INSULATING GLAZING WITH 2 PANES 1/4" GLASS AND 1/2" AIRSPACE.
G2 - 1/4" LAMINATED CLEAR GLASS.
G3 - INSULATING LAMINATED SECURITY GLAZING.
G3A - LAMINATED SECURITY GLAZING.
G4 - 1" THICK LAMINATED INSULATING SPANDREL GLAZING WITH 2 PANES 1/4" GLASS AND 1/2" AIRSPACE.
G5 - 1/4" CLEAR TEMPERED GLASS.

ABBREVIATIONS LEGEND

AL	=	ALUMINUM
AN	=	ANODIZED
BL	=	BORROWED LITE
GHM	=	GALVANIEALED HOLLOW METAL
GL	=	GLASS
HM	=	HOLLOW METAL
OCD	=	OVERHEAD COILING DOOR
OHCD	=	OVERHEAD COUNTER DOOR
PT	=	PAINT
ST	=	STAIN
SS	=	STAINLESS STEEL
STL	=	STEEL
WD	=	WOOD
90M	=	90 MINUTE ASSEMBLY RATING
*	=	SEE REMARKS COLUMN FOR NOTES

BCSC TOGETHER WE LEARN

CSO
8831 Keystone Crossing, Indianapolis, IN 46240
317.848.7800 | csoinc.net

© 2025 CSO Architects, Inc. All Rights Reserved

Howeler+Yoon Architecture
617.517.4101 howeleryoon.com

PROJECT:
BARTHOLOMEW CONSOLIDATED SCHOOL CORPORATION
MAPLE GROVE ELEMENTARY
TIPTON LAKES BLVD, COLUMBUS, IN 47201

SCOPE DRAWINGS:
These drawings indicate the general scope of the project in terms of architectural design concept, the dimensions of the building, the major architectural elements and the type of construction and finishes to be provided and used.
The drawings do not necessarily indicate or describe all work required for full performance and completion of the requirements of the Contract.
On the basis of the general scope indicated or described, the Contractor shall furnish all labor and material for the proper execution and completion of the work.

REVISIONS:
2 ADDENDUM #2 06/17/2025

ISSUE DATE	DRAWN BY	CHECKED BY
05/30/2025	AEH	ECN

DRAWING TITLE:
DOOR AND FRAME ELEVATIONS

CERTIFIED BY:
JAMES R. FINK REGISTERED AR0900003 STATE OF INDIANA ARCHITECT

DRAWING NUMBER
A503

PROJECT NUMBER
2024022

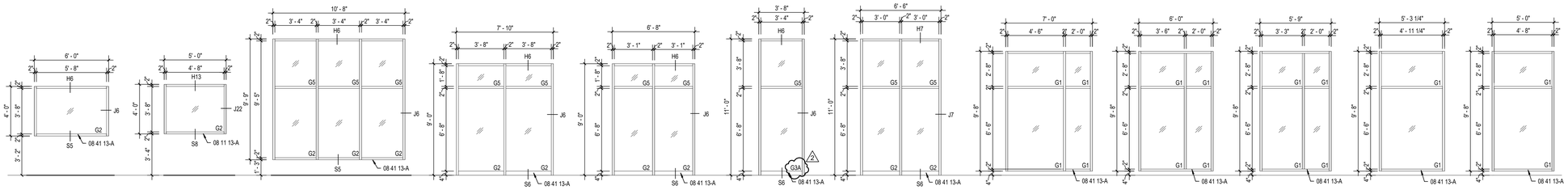

*PROVIDE GLAZING TYPE G2 IN BOTTOM PANE OF WD6 IN ROOM 120/C168

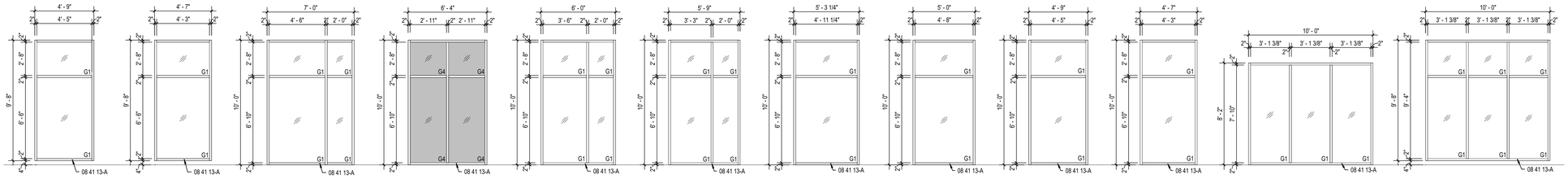

*PROVIDE GLAZING TYPE G1 AT WD16 IN ROOM B220

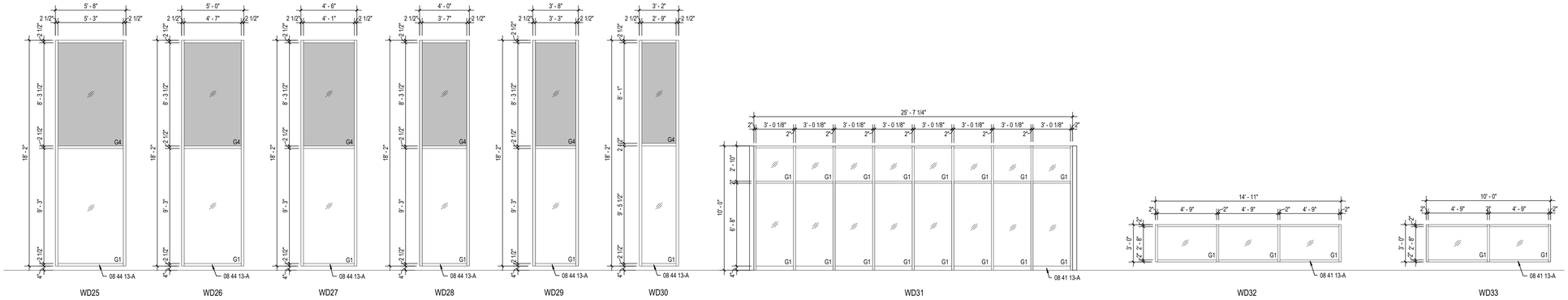

*SEE SEE SHEET A800 FOR GLAZING FILM WINDOW FINISH "GF1" TYPICAL - CAFETERIA AND GYMNASIUM CLERESTORY WINDOWS

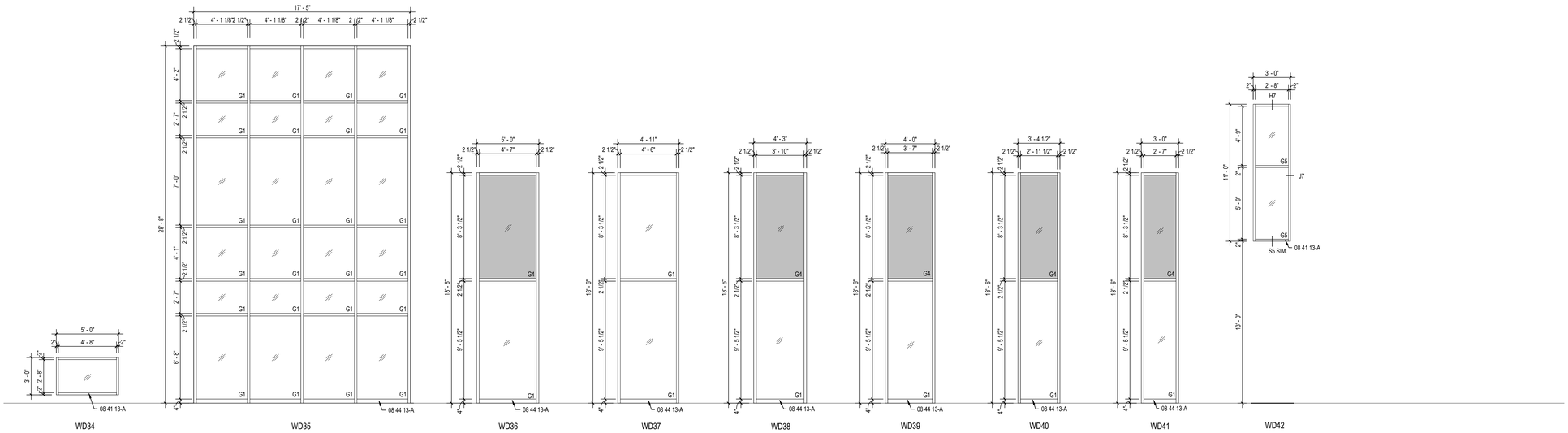

*SEE SEE SHEET A800 FOR GLAZING FILM WINDOW FINISH "GF1" TYPICAL - CAFETERIA AND GYMNASIUM CLERESTORY WINDOWS

*PROVIDE GLAZING TYPE G1 IN TOP PANES OF WD36'S IN ROOM D171

GENERAL DOOR/WINDOW NOTES

A. THESE GENERAL NOTES APPLY TO THE DOOR SCHEDULE.
B. DOOR AND FRAME NUMBERS CORRESPOND TO RESPECTIVE ROOM NUMBER. IN ROOMS WITH MULTIPLE OPENINGS, A NUMERICAL SUFFIX HAS BEEN ADDED TO DOOR NUMBERS.
C. VERTICAL FRAMING MEMBERS AT ALL DOOR FRAMES SHALL EXTEND TO STRUCTURE ABOVE.
D. UNDERCUT ALL DOORS AS REQUIRED BY FINAL FINISH.
E. PROVIDE CONTINUOUS SEALANT BETWEEN HOLLOW METAL FRAME PERIMETERS AND SURROUNDING WALL CONSTRUCTION.
F. PROVIDE CONTINUOUS SEALANT BETWEEN INTERIOR AND EXTERIOR WINDOW, CURTAINWALL AND STOREFRONT FRAME PERIMETERS AND SURROUNDING CONSTRUCTION UNLESS NOTED OTHERWISE.
G. GROUT FULL HOLLOW METAL FRAMES IN MASONRY CONSTRUCTION.
H. SPOT GROUT HOLLOW METAL FRAMES IN GYPSUM WALLS.
I. WHERE A FIRE RATING IS INDICATED ON THE DOOR SCHEDULE, HARDWARE AND DOOR ASSEMBLY COMPONENTS SHALL MEET THE REQUIREMENTS OF THAT LABEL.
J. WHERE AN STC RATING IS INDICATED ON THE DOOR SCHEDULE, HARDWARE AND DOOR ASSEMBLY COMPONENTS SHALL MEET THE REQUIREMENTS OF THAT LABEL.
K. INSTALL DOOR GLASS USING WET GLAZING METHOD.
L. ALL LINTELS ABOVE EXTERIOR OPENINGS SHALL BE GALVANIZED.
M. REFER TO SHEETS A503 & A504 FOR ADDITIONAL DOOR, FRAME AND BORROWED LITE ELEVATIONS.
N. COORDINATE THROAT OPENINGS WITH WALL WIDTH FOR ALL WRAP AROUND FRAMES.
O. SCHEDULED HARDWARE FOR ALUMINUM DOORS SHALL BE PROVIDED BY HARDWARE SUPPLIER AND INSTALLED BY ALUMINUM SUPPLIER. ALUMINUM DOORS TO BE PREPARED BY ALUMINUM DOOR SUPPLIER IN ACCORDANCE WITH THE SCHEDULED HARDWARE.
P. ALL NEW HOLLOW METAL DOORS, FRAMES AND BORROWED LITE FRAMES TO BE PAINTED AS INDICATED ON THE A800 SERIES FINISH PLANS. SEE FINISH PLANS FOR WOOD DOOR FINISHES.
Q. PROVIDE SILENCERS ON ALL DOOR FRAMES.
R. SEE STRUCTURAL DRAWINGS FOR REQUIREMENTS FOR MASONRY AND STEEL LINTELS. PROVIDE STRUCTURAL STEEL LINTELS AT OPENINGS OPENINGS WHERE INDICATED ON THE STRUCTURAL STEEL DRAWINGS IN LIEU OF MASONRY LINTEL AS SHOWN IN THESE DETAILS.
S. VERIFY ALL EXISTING CONDITIONS AND DIMENSIONS IN THE FIELD PRIOR TO FABRICATION OF DOORS AND FRAMES. BRING DISCREPANCIES TO THE ATTENTION OF THE ARCHITECT.
T. EXTERIOR ALUMINUM DOORS AND FRAMES TO BE BLACK ANODIZED ALUMINUM.
U. INTERIOR ALUMINUM DOORS AND FRAMES TO BE CLEAR ANODIZED ALUMINUM.

REMARKS

1. CASED DOOR FRAME, NO RABBET REQUIRED.
2. OCD / OHCD TO BE ELECTRICALLY POWERED. SEE ELECTRICAL DRAWINGS FOR MORE INFORMATION.
3. 180 DEGREE HINGE.
4. SEE 1/A405 FOR WALL SECTION. COORDINATE WITH FOOD SERVICE EQUIPMENT.
5. THIS DOOR TO RECIEVE GYM WALL PADDING. PROVIDE CUTOUTS FOR VISION PANELS WHERE APPLICABLE. SEE A900 SERIES DRAWINGS AND SPEC SECTION 11 66 23 FOR MORE INFORMATION.

GLASS SCHEDULE

G1 - 1" THICK LAMINATED, LOW E, INSULATING GLAZING WITH 2 PANES 1/4" GLASS AND 1/2" AIRSPACE.
G2 - 1/4" LAMINATED CLEAR GLASS.
G3 - INSULATING LAMINATED SECURITY GLAZING.
G3A - LAMINATED SECURITY GLAZING.
G4 - 1" THICK LAMINATED INSULATING SPANDREL GLAZING WITH 2 PANES 1/4" GLASS AND 1/2" AIRSPACE.
G5 - 1/4" CLEAR TEMPERED GLASS.

ABBREVIATIONS LEGEND

AL	=	ALUMINUM
AN	=	ANODIZED
BL	=	BORROWED LITE
GHM	=	GALVANNEALED HOLLOW METAL
GL	=	GLASS
HM	=	HOLLOW METAL
OCD	=	OVERHEAD COILING DOOR
OHCD	=	OVERHEAD COUNTER DOOR
PT	=	PAINT
ST	=	STAIN
SS	=	STAINLESS STEEL
STL	=	STEEL
WD	=	WOOD
90M	=	90 MINUTE ASSEMBLY RATING
*	=	SEE REMARKS COLUMN FOR NOTES

BCSC TOGETHER WE LEARN

CSO
8831 Keystone Crossing, Indianapolis, IN 46240
317.848.7800 | csoinc.net

© 2025 CSO Architects, Inc. All Rights Reserved

Howeler+Yoon Architecture
617.517.4101 howeleryoon.com

PROJECT:
BARTHOLOMEW CONSOLIDATED SCHOOL CORPORATION
MAPLE GROVE ELEMENTARY
TIPTON LAKES BLVD, COLUMBUS, IN 47201

SCOPE DRAWINGS:
These drawings indicate the general scope of the project. In terms of architectural design, they show the general layout of the building, the major architectural elements and the type of structural, mechanical and electrical systems.
The drawings do not necessarily indicate or describe all work required for full performance and completion of the requirements of the Contract.
On the basis of the general scope indicated or described, the trade contractors shall furnish all items required for the proper execution and completion of the work.

REVISIONS:

2	ADDENDUM #2	06/17/2025

ISSUE DATE	DRAWN BY	CHECKED BY
05/30/2025	AEH	ECN

DRAWING TITLE:
WINDOW ELEVATIONS

CERTIFIED BY:
JAMES R. FUNK REGISTERED ARCHITECT AR00900003 STATE OF INDIANA

DRAWING NUMBER
A504

PROJECT NUMBER
2024022

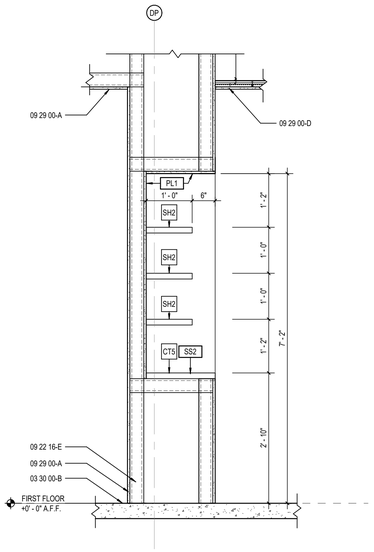

16 A653 MILLWORK SECTION
SCALE: 3/4" = 1'-0"

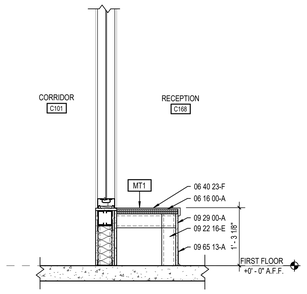

15 A653 MILLWORK SECTION
SCALE: 3/4" = 1'-0"

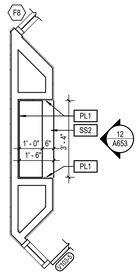

14 A653 MILLWORK ENLARGED PLAN
SCALE: 3/8" = 1'-0"

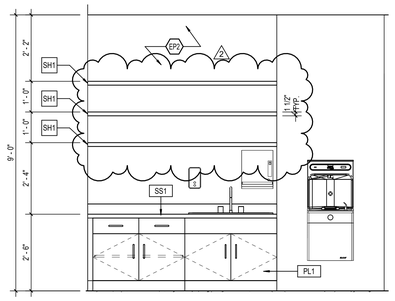

11 A653 MILLWORK ELEVATION
SCALE: 1/2" = 1'-0"

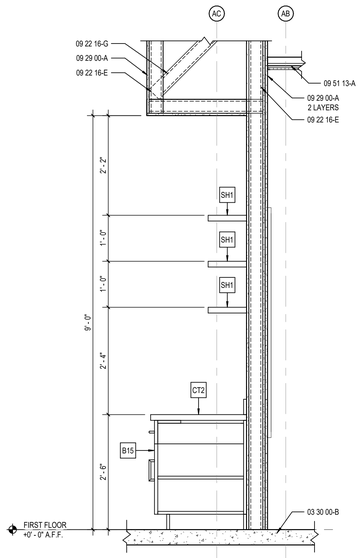

10 A653 MILLWORK SECTION
SCALE: 3/4" = 1'-0"

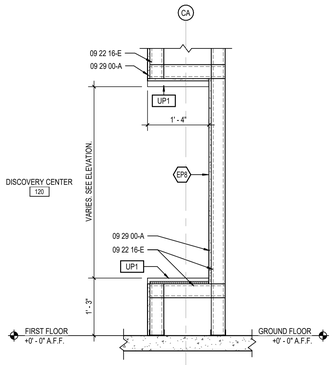

9 A653 MILLWORK SECTION
SCALE: 3/4" = 1'-0"

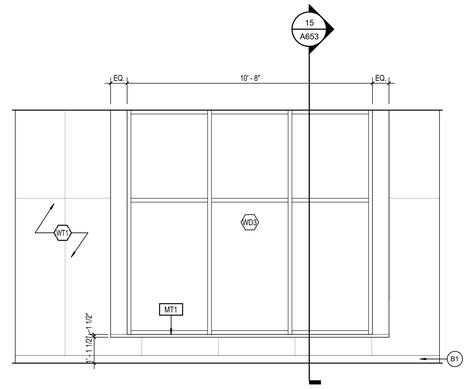

13 A653 MILLWORK ELEVATION
SCALE: 3/8" = 1'-0"

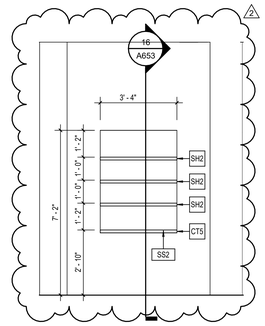

12 A653 MILLWORK ELEVATION
SCALE: 3/8" = 1'-0"

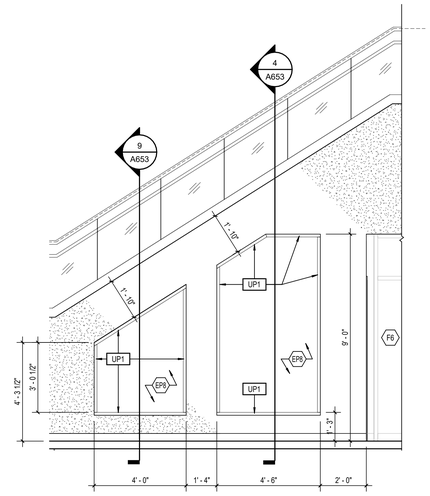

6 A653 MILLWORK ELEVATION
SCALE: 3/8" = 1'-0"

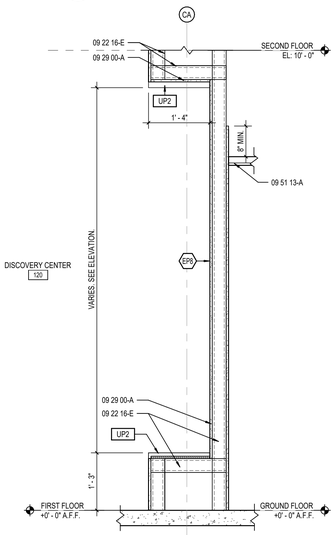

4 A653 MILLWORK SECTION
SCALE: 3/4" = 1'-0"

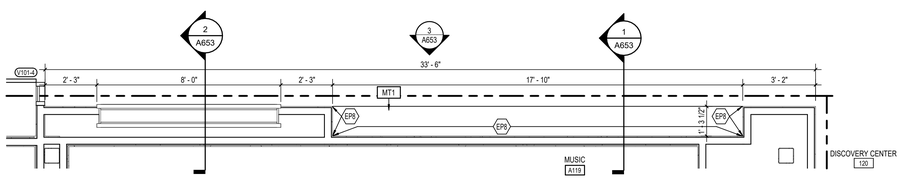

5 A653 MILLWORK ENLARGED PLAN
SCALE: 3/8" = 1'-0"

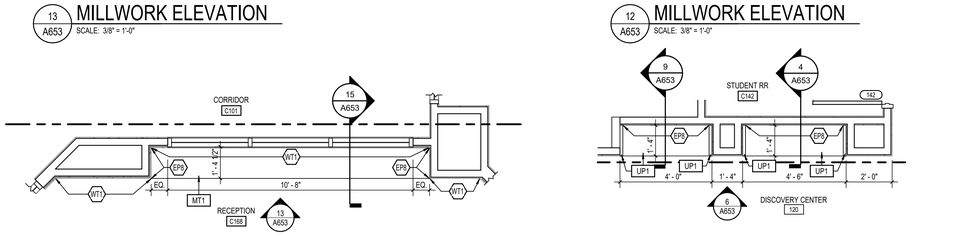

8 A653 MILLWORK ENLARGED PLAN
SCALE: 3/8" = 1'-0"

7 A653 MILLWORK ENLARGED PLAN
SCALE: 3/8" = 1'-0"

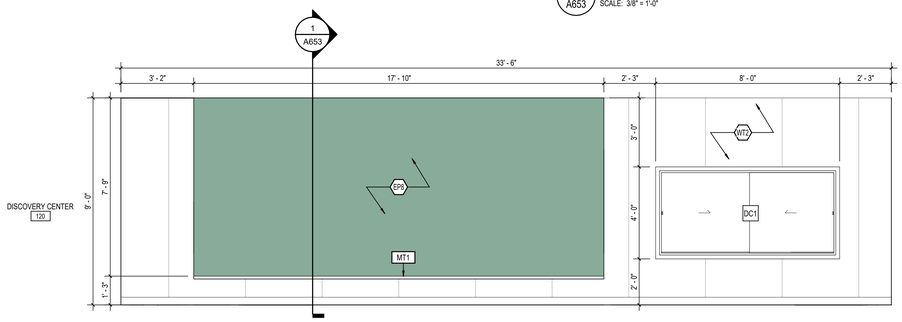

3 A653 MILLWORK ELEVATION
SCALE: 3/8" = 1'-0"

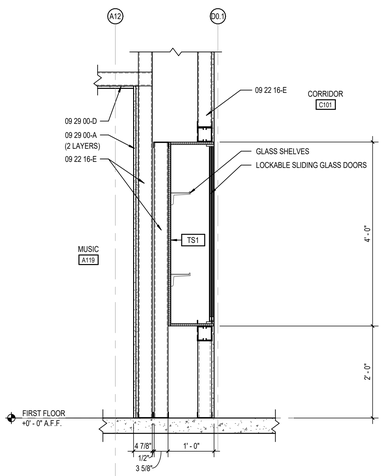

2 A653 MILLWORK SECTION
SCALE: 3/4" = 1'-0"

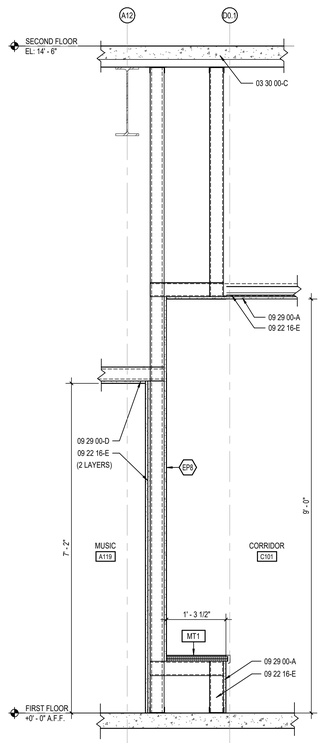

1 A653 MILLWORK SECTION
SCALE: 3/4" = 1'-0"

BCSC
TOGETHER WE LEARN

CSO
8831 Keystone Crossing, Indianapolis, IN 46240
317.848.7800 | csoinc.net

© 2025 CSO Architects, Inc. All Rights Reserved

Howeler+Yoon Architecture
617.517.4101 howeleryoon.com

PROJECT:
BARTHOLOMEW CONSOLIDATED SCHOOL CORPORATION
MAPLE GROVE ELEMENTARY
TIPTON LAKES BLVD, COLUMBUS, IN 47201

SCOPE DRAWINGS:
These drawings indicate the general scope of the project. They do not necessarily indicate or describe all work required for the building, the major architectural elements and the type of structural, mechanical and electrical systems.
The drawings do not necessarily indicate or describe all work required for full performance and completion of the building and site improvements.
On the basis of the general scope indicated or described, the trade contractors shall furnish all items required for the proper execution and completion of the work.

REVISIONS:

1	ADDENDUM #1	06/10/2025
2	ADDENDUM #2	06/17/2025

ISSUE DATE	DRAWN BY	CHECKED BY
05/30/2025	JAG	ECN

DRAWING TITLE:
MILLWORK DETAILS

CERTIFIED BY:
JAMES R. FUNK
REGISTERED
AR0900003
STATE OF
INDIANA
ARCHITECT

DRAWING NUMBER
A653

PROJECT NUMBER
2024022

RUG SCHEDULE (ALTERNATE)

MARK	MANUFACTURER	STYLE	COLOR	SIZE	LOCATION	
R1	MOHAWK	CHROMATIC CADENCE	444 RIGHT PLACE	10' - 0" x 12' - 0"	FIRST FLOOR - UNIT A	BROADLOOM CARPET W/ BINDING EDGING AND PADDED NON-SKID RUBBER BACKING
R2	MOHAWK	CHROMATIC CADENCE	444 RIGHT PLACE	8' - 0" x 10' - 0"	FIRST FLOOR - UNIT A	BROADLOOM CARPET W/ BINDING EDGING AND PADDED NON-SKID RUBBER BACKING
R3	MOHAWK	CHROMATIC CADENCE	535 BLUE SKIES	10' - 0" x 12' - 0"	FIRST FLOOR - UNIT B	BROADLOOM CARPET W/ BINDING EDGING AND PADDED NON-SKID RUBBER BACKING
R4	MOHAWK	CHROMATIC CADENCE	535 BLUE SKIES	8' - 0" x 10' - 0"	FIRST FLOOR - UNIT B	BROADLOOM CARPET W/ BINDING EDGING AND PADDED NON-SKID RUBBER BACKING
R5	MOHAWK	CHROMATIC CADENCE	636 WILLOW WEEP	10' - 0" x 12' - 0"	SECOND FLOOR - UNIT A	BROADLOOM CARPET W/ BINDING EDGING AND PADDED NON-SKID RUBBER BACKING
R6	MOHAWK	CHROMATIC CADENCE	636 WILLOW WEEP	8' - 0" x 10' - 0"	SECOND FLOOR - UNIT A	BROADLOOM CARPET W/ BINDING EDGING AND PADDED NON-SKID RUBBER BACKING
R7	MOHAWK	CHROMATIC CADENCE	353 SPELL ON YOU	10' - 0" x 12' - 0"	SECOND FLOOR - UNIT B	BROADLOOM CARPET W/ BINDING EDGING AND PADDED NON-SKID RUBBER BACKING

FLOOR TRANSITION DETAILS

LVT TO CONCRETE

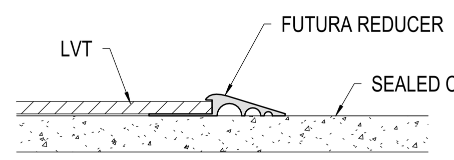

LVT TO EPOXY RESINOUS FLOOR

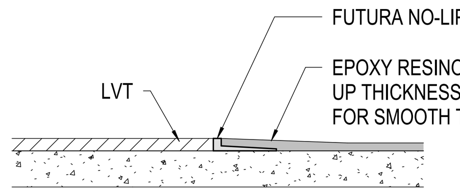

LVT TO CARPET TILE

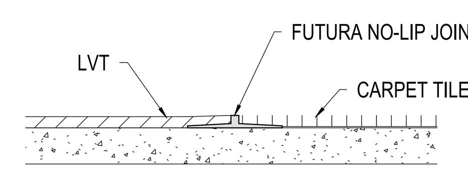

LVT TO WALK-OFF CARPET

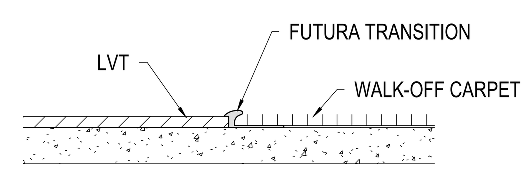

LVT (5MM) TO LVT (2.5MM)

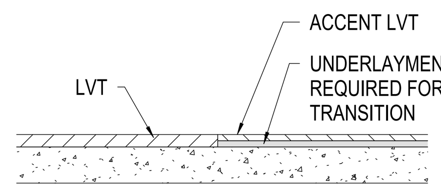

LVT TO SHEET VINYL

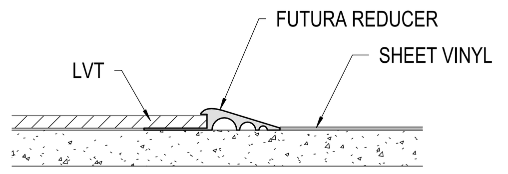

CARPET TO CONCRETE

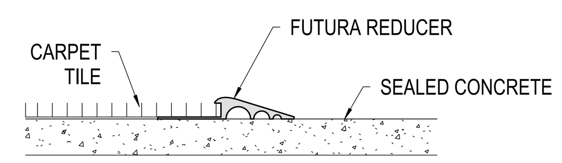

WALK-OFF CARPET TO CONCRETE

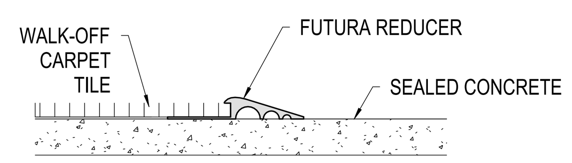

CARPET TO EPOXY RESINOUS FLOOR

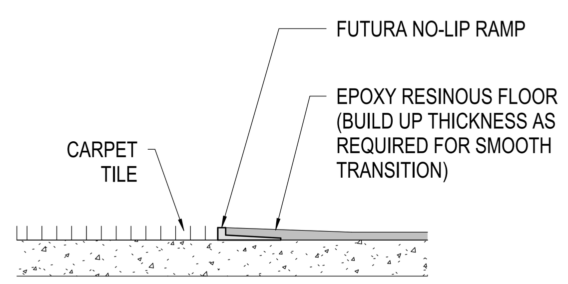

LVT TO WOOD ATHLETIC FLOOR

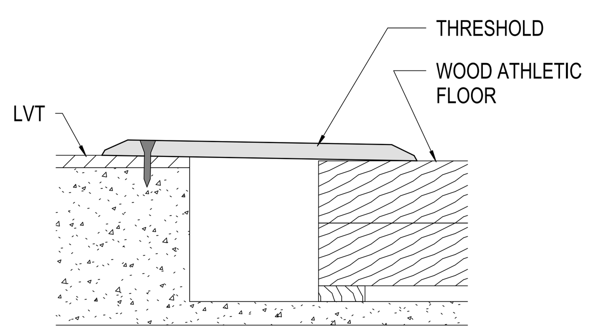

SEALED CONCRETE TO WOOD ATHLETIC FLOOR

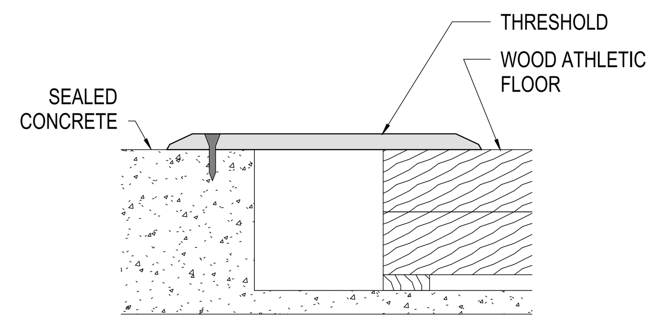

EPOXY RESINOUS FLOOR TO WOOD ATHLETIC FLOOR

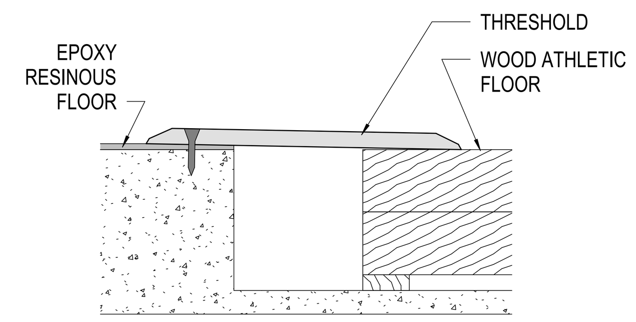

WALL TRANSITION DETAILS

WALL TILE CORNER

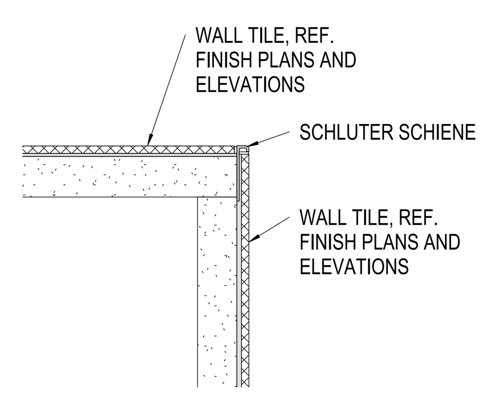

WALL TILE EDGE

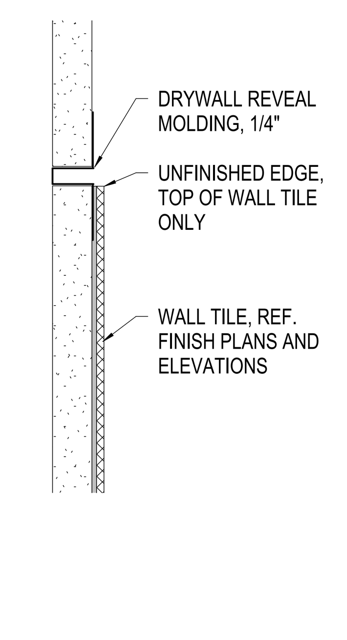

WALL TILE WITH RUBBER BASE

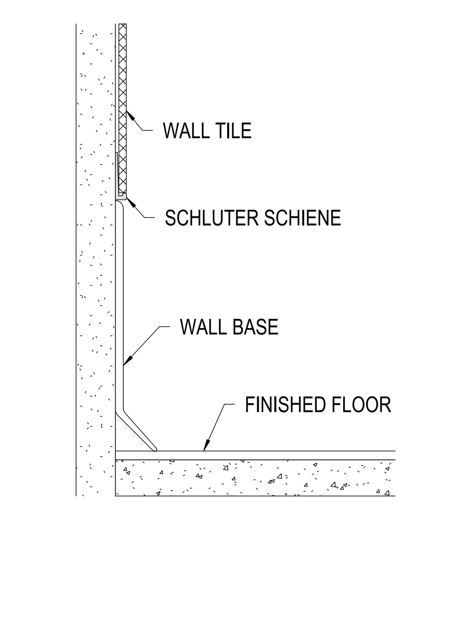

WALL TILE WITH EPOXY BASE

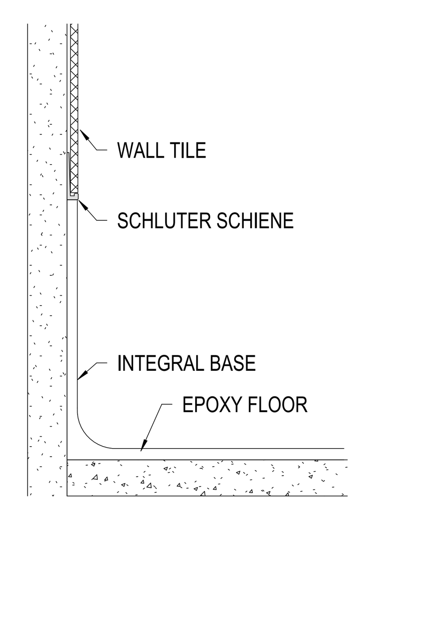

ACCENT WALL TILE WITH EPOXY BASE

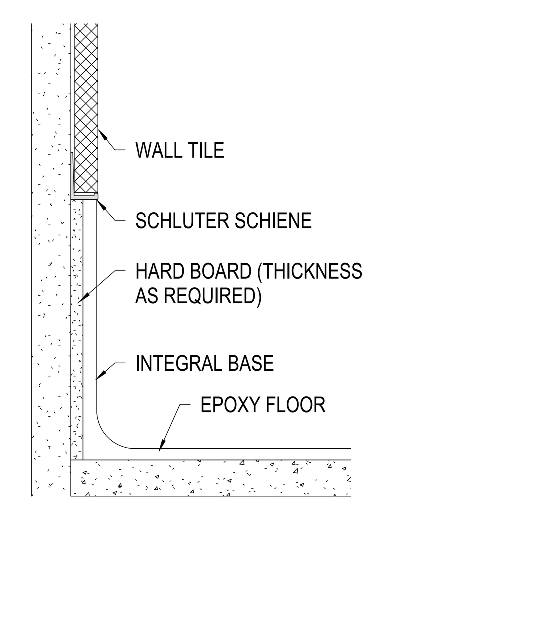

WOOD BASE

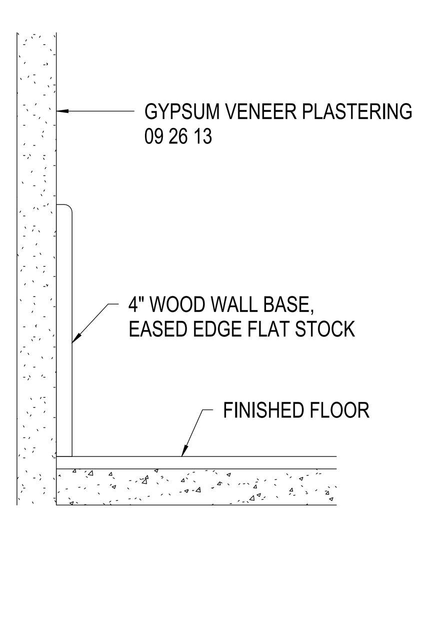

FINISH LEGEND

FLOOR FINISHES

WALK-OFF CARPET

(WOC1) MFR: MANNINGTON
COLLECTION: FRIXTION
STYLE: FORCE
COLOR: VECTOR 14362
SIZE: 18" X 36"
INSTALL: BRICK ASHLAR
LOCATION: VESTIBULES

CARPET

(C1) MFR: INTERFACE
STYLE: ETCHED & THREADED E613
COLOR: DUSK 103372
SIZE: 25CM X 1M
: ASHLAR
LOCATION: CLASSROOMS, ADMINISTRATION

(C2) MFR: INTERFACE
STYLE: OPEN AIR 401 STRIA
COLOR: CUSTOM
SAMPLE #: 275857-001, M1318
SIZE: 25CM X 1M
INSTALL: ASHLAR
LOCATION: DISCOVERY CENTER

LUXURY VINYL TILE

(LVT1) MFR: INTERFACE
STYLE: ON GRAIN EARTHEN FORMS 4.5MM
COLOR: WHITE OAK VENEER A03301
SIZE: 25CM X 1M
INSTALL: ASHLAR
LOCATION: CORRIDOR, CUBBIES, ACTIVITY COMMONS, DISCOVERY CENTER, CAFETERIA

(LVT2) MFR: INTERFACE
STYLE: EARTHEN FORMS 4.5MM
COLOR: GRIS A03502
SIZE: 50CM X 1M
INSTALL: ASHLAR
LOCATION: STEM, MAKERSPACE

(LVT3) MFR: PATCRAFT
STYLE: POLYCHROME I746V
COLOR: NEROLI-V2
SIZE: 9" X 48"
INSTALL: STAGGER
LOCATION: ORANGE ACCENT

(LVT4) MFR: PATCRAFT
STYLE: POLYCHROME I746V
COLOR: LUPINE-V2
SIZE: 9" X 48"
INSTALL: STAGGER
LOCATION: PURPLE ACCENT

(LVT5) MFR: PATCRAFT
STYLE: POLYCHROME I746V
COLOR: BALSAM-V2
SIZE: 9" X 48"
INSTALL: STAGGER
LOCATION: GREEN ACCENT

(LVT6) MFR: PATCRAFT
STYLE: POLYCHROME I746V
COLOR: CERULEAN-V2
SIZE: 9" X 48"
INSTALL: STAGGER
LOCATION: BLUE ACCENT

SHEET VINYL

(SV1) MFR: ROSCO
STYLE: CHROMA FLOOR
COLOR: GREEN
ROLL WIDTH : 78.7"
LOCATION: GREEN ROOM

SEALED CONCRETE

(SC1) TYPE: SEALED CONCRETE
LOCATION: UTILITY SPACES
NOTE: SEE SPECIFICATION

EPOXY RESINOUS FLOORING

(EF1) MFR: TORGINOL
PRODUCT: RESIN QUARTZ
COLOR: RIVERBANK
LOCATION: RESTROOMS, KITCHEN, LOCKERS

WOOD FLOORING

(WF1) SPECIES: WHITE MAPLE, PLAIN SLICED
STAIN: MATCH (LVT1)
LOCATION: DISCOVERY CENTER STAIR

WOOD ATHLETIC FLOORING

(AF1) MFR: AACER FLOORING
PRODUCT: AACERFLEX
COLOR: CUSTOM STAIN, MAPLE
INSTALL: PER MFR. RECOMMENDATIONS
LOCATION: GYM

RUBBER FLOORING

(RF1) MFR: ROPPE
PRODUCT: RUBBER TILE
COLOR: 178 PEWTER
SIZE: 24" X 24"
INSTALL: MONOLITHIC
LOCATION: STAIR LANDINGS
NOTE: HAMMERED

STAIR TREAD / RISER

(TR1) MFR: ROPPE
PRODUCT: RUBBER STAIR TREADS W/ RISER
COLOR: 178 PEWTER
LOCATION: STAIRS
NOTE: HAMMERED

WALL BASE

RUBBER BASE

(B1) MFR: ROPPE
STYLE: COVE
COLOR: 178 PEWTER
SIZE: 4"H
LOCATION: GENERAL BASE

VENTED RUBBER BASE

(B2) MFR: TARKETT
STYLE: JOHNSONITE VENT COVE
COLOR: 40 BLACK
SIZE: 4"H

WOOD BASE

(B3) STYLE: FLAT STOCK, EASDED EDGE
COLOR: EPOXY PAINT TO MATCH ADJACENT WALL
SIZE: 4"H, 1/4" THICKNESS

EPOXY BASE BASE

(EB1) MFR: MATCH (EF1)
STYLE: MATCH (EF1)
COLOR: MATCH (EF1)
SIZE: 4"H
LOCATION: MATCH (EF1)

WALL FINISHES

EPOXY PAINT

(EP1) MFR: SHERWIN WILLIAMS
COLOR: SW7010 WHITE DUCK
NOTE: GENERAL PAINT

(EP2) MFR: SHERWIN WILLIAMS
COLOR: SW7547 SANDBAR
NOTE: NEUTRAL ACCENT

(EP3) MFR: SHERWIN WILLIAMS
COLOR: SW2803 ROCKWOOD TERRA COTTA
NOTE: ORANGE ACCENT

(EP4) MFR: SHERWIN WILLIAMS
COLOR: SW6271 EXPRESSIVE PLUM
NOTE: PURPLE ACCENT

(EP5) MFR: SHERWIN WILLIAMS
COLOR: SW6194 BASIL
NOTE: GREEN ACCENT

(EP6) MFR: SHERWIN WILLIAMS
COLOR: SW7614 ST. BART'S
NOTE: BLUE ACCENT

(EP7) MFR: SHERWIN WILLIAMS
COLOR: SW7043 WORLDLY GRAY
NOTE: ACCENT

(EP8) MFR: SHERWIN WILLIAMS
COLOR: TBD
NOTE: SCHOOL BRANDING COLOR

PAINT

(P1) MFR: SHERWIN WILLIAMS
COLOR: SW7010 WHITE DUCK
NOTE: GENERAL PAINT

(P2) MFR: SHERWIN WILLIAMS
COLOR: SW7547 SANDBAR
NOTE: NEUTRAL ACCENT

(P3) MFR: SHERWIN WILLIAMS
COLOR: SW2803 ROCKWOOD TERRA COTTA
NOTE: ORANGE ACCENT

(P4) MFR: SHERWIN WILLIAMS
COLOR: SW6271 EXPRESSIVE PLUM
NOTE: PURPLE ACCENT

(P5) MFR: SHERWIN WILLIAMS
COLOR: SW6194 BASIL
NOTE: GREEN ACCENT

(P6) MFR: SHERWIN WILLIAMS
COLOR: SW7614 ST. BART'S
NOTE: BLUE ACCENT

(P7) MFR: SHERWIN WILLIAMS
COLOR: SW7043 WORLDLY GRAY
NOTE: EXPOSED STRUCTURE, ACCENT

(P8) MFR: SHERWIN WILLIAMS
COLOR: TBD
NOTE: SCHOOL BRANDING COLOR

(P9) MFR: ROSCO
STYLE: CHROMA KEY PAINT
COLOR: #05711 CHROMA KEY GREEN
LOCATION: GREEN ROOM
NOTE: PROVIDE LEVEL 5 FINISH; PRIME W/ ROSCO TOUGH PRIME WHITE

WALL PROTECTION

(WP1) MFR: CONSTRUCTION SPECIALTIES
PRODUCT: ACROVYN SOLID COLORS
COLOR: OYSTER GRAY
SIZE: 4' x 8'
THICKNESS: .060"
LOCATION: COOL DOWN ROOMS

WALL FINISHES (CONT.)

WALL TILE

(WT1) MFR: LOUISVILLE TILE, CROSSVILLE TILE
STYLE: LAMINAM OXIDE 3+
COLOR: BIANCO
SIZE: 1M X 3M
INSTALL: MONOLITHIC
LOCATION: CORRIDORS

(WT2) MFR: LOUISVILLE TILE, CROSSVILLE TILE
STYLE: LAMINAM OXIDE 3+
COLOR: AVORIO
SIZE: 1M X 3M
INSTALL: STACK BOND
LOCATION: CORRIDORS, RESTROOMS

(WT3) MFR: DALTILE
STYLE: ARTCRAFTED
COLOR: COTTO AC27
SIZE: 3" X 12"
INSTALL: MONOLITHIC, VERTICAL STACK
LOCATION: ORANGE TILE ACCENT

(WT4) MFR: TRINITY TILE
STYLE: ADELINE
COLOR: LAVENDER
SIZE: 3" X 12"
INSTALL: MONOLITHIC, VERTICAL STACK
LOCATION: PURPLE ACCENT

(WT5) MFR: DALTILE
STYLE: ARTCRAFTED
COLOR: ALOE AC25
SIZE: 3" X 12"
INSTALL: MONOLITHIC, VERTICAL STACK
LOCATION: GREEN TILE ACCENT

(WT6) MFR: DALTILE
STYLE: ARTCRAFTED
COLOR: TIDE AC29
SIZE: 3" X 12"
INSTALL: MONOLITHIC, VERTICAL STACK
LOCATION: BLUE TILE ACCENT

(WT7) MFR: DALTILE
STYLE: ARTCRAFTED
COLOR: DUNE AC24
SIZE: 3" X 12"
INSTALL: MONOLITHIC, VERTICAL STACK
LOCATION: PUBLIC RESTROOMS

(WT8) MFR: PLATFORM SURFACES
STYLE: INDIANA LIMESTONE
COLOR: DYNAMIC BUFF SELECT
SIZE: 12" X 24"
INSTALL: MONOLITHIC, VERTICAL
LOCATION: RECEPTION DESK

GLAZING FILM

(GF1) MFR: SOLYX
STYLE: FROSTED, SX-3131 ECO DUSTED
LOCATION: GYM, CAFETERIA

CASEWORK AND COUNTERTOPS

PLASTIC LAMINATE

[PL1] MFR: FORMICA
COLOR: BEIGE ELM 5794-NG
FINISH: NATURAL GRAIN
LOCATION: GENERAL CASEWORK
(2)

SOLID SURFACE

[SS1] MFR: CORIAN
COLOR: LINEN
EDGE: EASED
ALLOWANCE: GENERAL COUNTERTOPS, WINDOW
LOCATION: STOOLS

[SS2] MFR: FORMICA
COLOR: LUNA SAND
EDGE: EASED
LOCATION: ADMINISTRATION

[SS3] MFR: WILSONART
COLOR: MASONED CONCRETE
EDGE: EASED
LOCATION: ADMINISTRATION

QUARTZ

[QZ1] MFR: CORIAN
COLOR: NEUTRAL CEMENT
LOCATION: SERVING LINE
NOTE: PART OF KITCHEN CONSULTANT CONTRACT

MISCELLANEOUS

UPHOLSTERY

[UP1] MFR: TBD
STYLE: TBD
NOTE: PRICE $75.00 PER YARD
LOCATION: READING NOOKS

[UP2] MFR: CAREGIE
STYLE: XOREL
NOTE: FLUX 6557-72
LOCATION: OPERABLE PARTITION

TACK SURFACE

[TS1] MFR: FORBO
COLOR: OYSTER SHELL
LOCATION: DISPLAY CASE, GENERAL TACK

CUBICLE CURTAIN

[CC1] MFR: CARNEGIE
STYLE GRASSLANDS
COLOR: 1
LOCATION: CLINIC

METAL (POWDER COAT)

[MT1] COLOR: MATCH TO PAINT (P8)
LOCATION: RECEPTION, CORRIDOR C101 BENCH SEAT
NOTE: SEE A653

GENERAL FINISH NOTES

1. ANY DISCREPANCIES WITHIN THE DOCUMENTS SHOULD BE BROUGHT TO THE ATTENTION OF CSO ARCHITECTS PRIOR TO INSTALLATION. THESE DOCUMENTS WILL GOVERN OVER PREVIOUS SUPPLEMENTAL DRAWINGS.
2. THE SCHEDULED MATERIALS SHALL NOT BE INSTALLED BEFORE THE CONTRACTOR'S PHYSICAL COLOR SAMPLE SUBMITTALS HAVE BEEN APPROVED, AS REQUIRED BY THE SPECIFICATIONS. IF ANY MATERIAL IS INSTALLED BEFORE APPROVAL, THE CONTRACTOR WILL BE RESPONSIBLE FOR THE REMOVAL, REPLACEMENT PURCHASE, AND INSTALLATION OF ALL ERRONEOUS SPECIFICATIONS.
3. ALL SURFACES RECEIVING FINISHES SHALL BE PROPERLY PREPARED PER MANUFACTURERS' SPECIFICATIONS PRIOR TO INSTALLATION. CONTRACTOR SHALL BE RESPONSIBLE FOR FIELD VERIFYING CONDITIONS.
4. FOR CHANGE IN FLOOR FINISH MATERIALS OF DIFFERENT HEIGHTS, PROVIDE TRANSITION STRIP TO MEET CODE/ADA REQUIREMENTS.
5. WHEN FLOOR FINISHES TRANSITION AT DOOR OPENING, THE TRANSITION IS TO BE ON CENTER OF DOOR PANEL, U.N.O. SEE TRANSITION DETAILS ON A800 FOR ADDITIONAL INFORMATION.
6. WHERE CARPET TILE AND LVT TRANSITIONS OCCUR, INSTALL FACTORY FINISHED EDGE OF CARPET TO FACTORY FINISHED EDGE OF LVT; DO NOT USE CUT EDGES AT ANY TRANSITIONS.
7. SEE INTERIOR PAINT SPECIFICATIONS FOR SCHEDULE OF COATING TYPE PER SUBSTRATE AND SHEEN. CONTRACTOR TO PROVIDE CRISP, CLEAN LINES BETWEEN ALL PAINT TRANSITIONS.
8. ALL WALL MOUNTED GRILLES, METAL PANELS, MISC. METALS, ETC. ARE TO BE FACTORY FINISHED TO MATCH ADJACENT WALLS, U.N.O.
9. ALL CMU WALLS TO RECEIVE HIGH PERFORMANCE COATINGS (EP#).
10. DO NOT PAINT INTERIOR PRECAST PANELS OR OTHER FACTORY FINISHED ITEMS, U.N.O.
11. ALL EXPOSED STRUCTURAL ELEMENTS TO BE PAINTED (EP7), U.N.O. SEE SPECIFICATIONS FOR ADDITIONAL INFORMATION.
12. ALL HOLLOW METAL DOORS AND FRAMES ARE TO BE PAINTED TO MATCH ADJACENT WALL. PROPER SURFACE PREPARATION REQUIRED PER MANUFACTURER'S REQUIREMENTS. REFER TO SPECIFICATIONS FOR PAINT TYPE, SHEEN, AND ADDITIONAL INFORMATION.
13. ALL WOOD DOORS SPECIFIED TO BE PAINTED TO MATCH ADJACENT WALL SURFACE; REFER A501.
14. ALL GWB CEILINGS AND/OR SOFFITS/BULKHEADS TO HAVE FACES AND UNDERSIDE PAINTED TO MATCH ADJACENT WALLS, U.N.O. REFER TO REFLECTED CEILING PLANS AND SPECIFICATIONS FOR ALL CEILING MATERIALS, THEIR LOCATIONS, AND ADDITIONAL INFORMATION.
15. PAINT WALLS BEFORE INSTALLING MARKER BOARDS, TACKBOARDS, ETC.
16. WOOD DOORS TO BE WHITE MAPLE, STAINED TO MATCH LVT1. SEE SPECIFICATIONS FOR ADDITIONAL INFORMATION.
17. FOR CORNER GUARDS, REFER TO SPECIFICATIONS AND A900 SERIES FOR INFORMATION AND LOCATIONS. COLORS TO BE SELECTED FROM MANUFACTURER'S FULL RANGE, U.N.O. IN FINISH LEGEND ON A800. CORNER GUARDS TO BE APPLIED TO GWB ONLY.
18. WHERE WALL TILE OCCURS, ALL OUTSIDE CORNERS AND EXPOSED TILE EDGES ARE TO BE TRIMMED WITH SCHLUTER SCHIENE IN BRUSHED STAINLESS STEEL FINISH. SEE WALL TRANSITION DETAILS ON A800.
19. WALL TILE TO BE INSTALLED WITH THE MINIMUM RECOMMENDED GROUT THICKNESS PER TILE MANUFACTURER. GROUT COLOR TO BE SELECTED FROM MANUFACTURER'S FULL RANGE. REFER TO SPECIFICATIONS FOR ADDITIONAL INFORMATION.
20. PLASTIC TOILET PARTITIONS TO BE SELECTED FROM MANUFACTURER'S FULL RANGE. PARTITIONS MUST MEET NFPA 286. REFER TO SPECIFICATIONS FOR ADDITIONAL INFORMATION.
21. GYM WALL PADDING, BLEACHERS, AND EQUIPMENT FINISHES TO BE SELECTED FROM MANUFACTURER'S FULL RANGE. REFER TO 900 SERIES DRAWINGS AND SPECIFICATIONS FOR ADDITIONAL INFORMATION.
22. ALL CUSTODIAL MOP SINK LOCATIONS TO RECEIVE FRP; LENGTH AS NECESSARY, MINIMUM OF 2'-0" ON EITHER SIDE OF SINK. FRP TO START AT TOP OF BASE AND RUN FULL PANEL WIDTH (4'-0"). COLOR TO BE SELECTED FROM MANUFACTURER'S FULL RANGE.

FINISH TAG KEY

- (XXX) FLOOR FINISH
- (XX) BASE FINISH
- ⬡XX WALL FINISH
- [XXX / XXX] HORIZONTAL FINISH (COUNTERTOP) / VERTICAL FINISH (CASEWORK)
- [XXX] COUNTERTOP, CASEWORK OR MISCELLANEOUS FINISH ONLY REFER TO FINISH LEGEND
- XX ACCENT WALL FINISH
- ←→ FLOORING INSTALL DIRECTION

(F#) FINISH PLAN NOTES

F1 ALIGN FLOOR TRANSITION TO OUTSIDE CORNER OR AS INDICATED ON PLAN.
F2 INSTALL WALL TILE (WT1) FROM TOP OF RUBBER BASE (B1) TO ALIGN WITH TOP OF DOOR FRAME. EXPOSED TILE EDGES TO RECEIVE SCHULTER.
F3 INSTALL WALL TILE (WT2) FROM TOP OF RUBBER BASE (B1) TO UNDERSIDE OF BULKHEAD.
F4 INSTALL WALL TILE (WT1) FROM TOP OF RUBBER BASE (B1) TO 9'-0" AFF; PAINT (P1) ABOVE. REFER TO A800 FOR WALL TRANSITION DETAILS.
F5 INSTALL WALL TILE (WT2) FROM TOP OF RUBBER BASE (B1) TO 9'-1" AFF; PAINT (P2) ABOVE. REFER TO A800 FOR WALL TRANSITION DETAILS.
F6 INSTALL WALL TILE (WT2) FROM TOP OF RUBBER BASE (B1) TO 7'-0" AFF; PAINT (P2) ABOVE. REFER TO A800 FOR WALL TRANSITION DETAILS.
F7 INSTALL WALL TILE (WT1) FROM TOP OF RUBBER BASE (B1) TO 7'-0" AFF; PAINT (P1) ABOVE. REFER TO A800 FOR WALL TRANSITION DETAILS.
F8 INSTALL WALL TILE (WT1) FROM TOP OF RUBBER BASE (B1) TO 11'-0" AFF; PAINT (P1) ABOVE. REFER TO A800 FOR WALL TRANSITION DETAILS.
F9 CENTER COURT TO RECEIVE 12'-0" DIAMETER FOUR COLOR LOGO. LOGO TO BE SELECTED BY OWNER DURING CONSTRUCTION.
F10 COLOR ACCENT WALLS TO RECEIVE PLASTER VENEER. REFER TO GYPSUM VENEER PLASTERING 09 26 13.
F11 BASKETBALL GAMES LINES TO BE BLACK. VOLLEYBALL GAME LINES TO BE WHITE.
F12 ELEVATOR SIDE AND REAR WALL PANELS TO RECEIVE PLASTIC LAMINATE (PL1).

BCSC
TOGETHER WE LEARN

CSO
8831 Keystone Crossing, Indianapolis, IN 46240
317.848.7800 | csoinc.net
© 2025 CSO Architects, Inc. All Rights Reserved

Höweler+Yoon Architecture
617.517.4101 howeleryoon.com

PROJECT:
BARTHOLOMEW CONSOLIDATED SCHOOL CORPORATION
MAPLE GROVE ELEMENTARY
TIPTON LAKES BLVD, COLUMBUS, IN 47201

SCOPE DRAWINGS:
These drawings indicate the general scope of the project in terms of architectural design concept, the dimensions of the building, the major architectural elements and the type of structural, mechanical and electrical systems.
The drawings do not necessarily indicate or describe all work required for full performance and completion of the requirements of the Contract.
On the basis of the general scope indicated or described, the trade contractors shall furnish all items required for the proper execution and completion of the work.

REVISIONS:

1	ADDENDUM #1	06/10/2025
2	ADDENDUM #2	06/17/2025

ISSUE DATE	DRAWN BY	CHECKED BY
05/30/2025	RNR	ECN

DRAWING TITLE:
FINISH LEGEND & NOTES

CERTIFIED BY:
JAMES R. FUNK REGISTERED AR00900003 STATE OF INDIANA ARCHITECT

DRAWING NUMBER
A800

PROJECT NUMBER
2024022

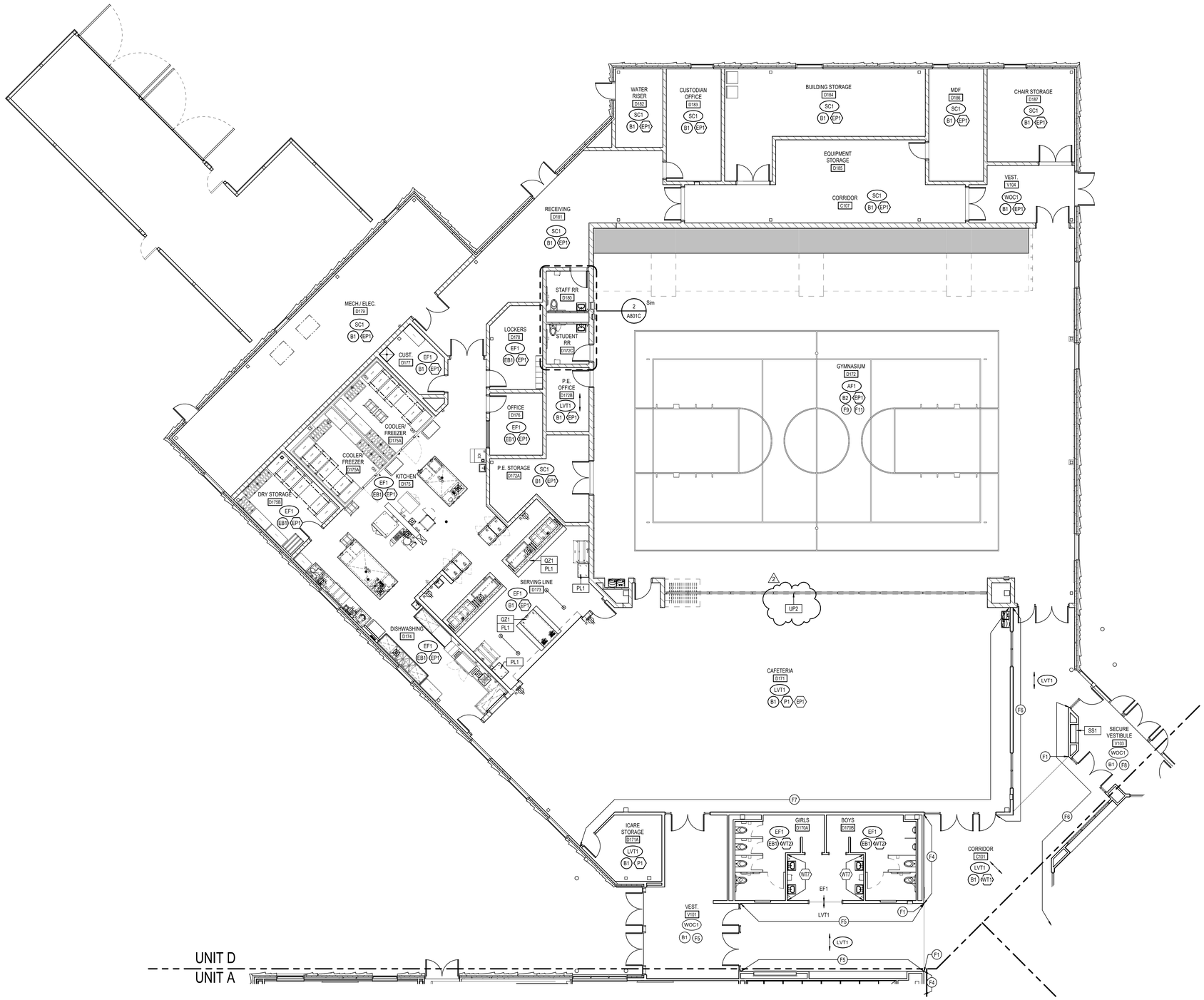

1 A801D FIRST FLOOR FINISH PLAN - UNIT D
SCALE: 1/8" = 1'-0"

GENERAL FINISH NOTES

1. ANY DISCREPANCIES WITHIN THE DOCUMENTS SHOULD BE BROUGHT TO THE ATTENTION OF CSO ARCHITECTS PRIOR TO INSTALLATION. THESE DOCUMENTS WILL GOVERN OVER PREVIOUS SUPPLEMENTAL DRAWINGS.
2. THE SCHEDULED MATERIALS SHALL NOT BE INSTALLED BEFORE THE CONTRACTOR'S PHYSICAL COLOR SAMPLE SUBMITTALS HAVE BEEN APPROVED, AS REQUIRED BY THE SPECIFICATIONS. IF ANY MATERIAL IS INSTALLED BEFORE APPROVAL, THE CONTRACTOR WILL BE RESPONSIBLE FOR THE REMOVAL, REPLACEMENT PURCHASE, AND INSTALLATION OF ALL ERRONEOUS SPECIFICATIONS.
3. ALL SURFACES RECEIVING FINISHES SHALL BE PROPERLY PREPARED PER MANUFACTURERS' SPECIFICATIONS PRIOR TO INSTALLATION. CONTRACTOR SHALL BE RESPONSIBLE FOR FIELD VERIFYING CONDITIONS.
4. FOR CHANGE IN FLOOR FINISH MATERIALS OF DIFFERENT HEIGHTS, PROVIDE TRANSITION STRIP TO MEET CODE/ADA REQUIREMENTS.
5. WHEN FLOOR FINISHES TRANSITION AT DOOR OPENING, THE TRANSITION IS TO BE ON CENTER OF DOOR PANEL, U.N.O. SEE TRANSITION DETAILS ON A800 FOR ADDITIONAL INFORMATION.
6. WHERE CARPET TILE AND LVT TRANSITIONS OCCUR, INSTALL FACTORY FINISHED EDGE OF CARPET TO FACTORY FINISHED EDGE OF LVT; DO NOT USE CUT EDGES AT ANY TRANSITIONS.
7. SEE INTERIOR PAINT SPECIFICATIONS FOR SCHEDULE OF COATING TYPE PER SUBSTRATE AND SHEEN. CONTRACTOR TO PROVIDE CRISP, CLEAN LINES BETWEEN ALL PAINT TRANSITIONS.
8. ALL WALL MOUNTED GRILLES, METAL PANELS, MISC. METALS, ETC. ARE TO BE FACTORY FINISHED TO MATCH ADJACENT WALLS, U.N.O.
9. ALL CMU WALLS TO RECEIVE HIGH PERFORMANCE COATINGS (EP#).
10. DO NOT PAINT INTERIOR PRECAST PANELS OR OTHER FACTORY FINISHED ITEMS, U.N.O.
11. ALL EXPOSED STRUCTURAL ELEMENTS TO BE PAINTED (EP7), U.N.O. SEE SPECIFICATIONS FOR ADDITIONAL INFORMATION.
12. ALL HOLLOW METAL DOORS AND FRAMES ARE TO BE PAINTED TO MATCH ADJACENT WALL. PROPER SURFACE PREPARATION REQUIRED PER MANUFACTURER'S REQUIREMENTS. REFER TO SPECIFICATIONS FOR PAINT TYPE, SHEEN, AND ADDITIONAL INFORMATION.
13. ALL WOOD DOORS SPECIFIED TO BE PAINTED TO MATCH ADJACENT WALL SURFACE; REFER A501.
14. ALL GWB CEILINGS AND/OR SOFFITS/BULKHEADS TO HAVE FACES AND UNDERSIDE PAINTED TO MATCH ADJACENT WALLS, U.N.O. REFER TO REFLECTED CEILING PLANS AND SPECIFICATIONS FOR ALL CEILING MATERIALS, THEIR LOCATIONS, AND ADDITIONAL INFORMATION.
15. PAINT WALLS BEFORE INSTALLING MARKER BOARDS, TACKBOARDS, ETC.
16. WOOD DOORS TO BE WHITE MAPLE, STAINED TO MATCH LVT1. SEE SPECIFICATIONS FOR ADDITIONAL INFORMATION.
17. FOR CORNER GUARDS, REFER TO SPECIFICATIONS AND A900 SERIES FOR INFORMATION AND LOCATIONS. COLORS TO BE SELECTED FROM MANUFACTURER'S FULL RANGE, U.N.O. IN FINISH LEGEND ON A800. CORNER GUARDS TO BE APPLIED TO GWB ONLY.
18. WHERE WALL TILE OCCURS, ALL OUTSIDE CORNERS AND EXPOSED TILE EDGES ARE TO BE TRIMMED WITH SCHLUTER SCHIENE IN BRUSHED STAINLESS STEEL FINISH. SEE WALL TRANSITION DETAILS ON A800.
19. WALL TILE TO BE INSTALLED WITH THE MINIMUM RECOMMENDED GROUT THICKNESS PER TILE MANUFACTURER. GROUT COLOR TO BE SELECTED FROM MANUFACTURER'S FULL RANGE. REFER TO SPECIFICATIONS FOR ADDITIONAL INFORMATION.
20. PLASTIC TOILET PARTITIONS TO BE SELECTED FROM MANUFACTURER'S FULL RANGE. PARTITIONS MUST MEET NFPA 286. REFER TO SPECIFICATIONS FOR ADDITIONAL INFORMATION.
21. GYM WALL PADDING, BLEACHERS, AND EQUIPMENT FINISHES TO BE SELECTED FROM MANUFACTURER'S FULL RANGE. REFER TO 900 SERIES DRAWINGS AND SPECIFICATIONS FOR ADDITIONAL INFORMATION.
22. ALL CUSTODIAL MOP SINK LOCATIONS TO RECEIVE FRP; LENGTH AS NECESSARY, MINIMUM OF 2'-0" ON EITHER SIDE OF SINK. FRP TO START AT TOP OF BASE AND RUN FULL PANEL WIDTH (4'-0"). COLOR TO BE SELECTED FROM MANUFACTURER'S FULL RANGE.

FINISH TAG KEY

- XXX — FLOOR FINISH
- XX — BASE FINISH
- XX — WALL FINISH
- XXX / XXX — HORIZONTAL FINISH (COUNTERTOP) / VERTICAL FINISH (CASEWORK)
- XXX — COUNTERTOP, CASEWORK OR MISCELLANEOUS FINISH ONLY REFER TO FINISH LEGEND
- XX — ACCENT WALL FINISH
- FLOORING INSTALL DIRECTION

F# FINISH PLAN NOTES

F1 ALIGN FLOOR TRANSITION TO OUTSIDE CORNER OR AS INDICATED ON PLAN.
F2 INSTALL WALL TILE (WT1) FROM TOP OF RUBBER BASE (B1) TO ALIGN WITH TOP OF DOOR FRAME. EXPOSED TILE EDGES TO RECEIVE SCHULTER.
F3 INSTALL WALL TILE (WT2) FROM TOP OF RUBBER BASE (B1) TO UNDERSIDE OF BULKHEAD.
F4 INSTALL WALL TILE (WT1) FROM TOP OF RUBBER BASE (B1) TO 9'-0" AFF; PAINT (P1) ABOVE. REFER TO A800 FOR WALL TRANSITION DETAILS.
F5 INSTALL WALL TILE (WT2) FROM TOP OF RUBBER BASE (B1) TO 9'-1" AFF; PAINT (P2) ABOVE. REFER TO A800 FOR WALL TRANSITION DETAILS.
F6 INSTALL WALL TILE (WT2) FROM TOP OF RUBBER BASE (B1) TO 7'-0" AFF; PAINT (P2) ABOVE. REFER TO A800 FOR WALL TRANSITION DETAILS.
F7 INSTALL WALL TILE (WT1) FROM TOP OF RUBBER BASE (B1) TO 7'-0" AFF; PAINT (P1) ABOVE. REFER TO A800 FOR WALL TRANSITION DETAILS.
F8 INSTALL WALL TILE (WT1) FROM TOP OF RUBBER BASE (B1) TO 11'-0" AFF; PAINT (P1) ABOVE. REFER TO A800 FOR WALL TRANSITION DETAILS.
F9 CENTER COURT TO RECEIVE 12'-0" DIAMETER FOUR COLOR LOGO. LOGO TO BE SELECTED BY OWNER DURING CONSTRUCTION.
F10 COLOR ACCENT WALLS TO RECEIVE PLASTER VENEER. REFER TO GYPSUM VENEER PLASTERING 09 26 13.
F11 BASKETBALL GAMES LINES TO BE BLACK. VOLLEYBALL GAME LINES TO BE WHITE.
F12 ELEVATOR SIDE AND REAR WALL PANELS TO RECEIVE PLASTIC LAMINATE (PL1).

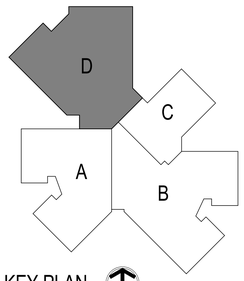

KEY PLAN
NORTH

BCSC TOGETHER WE LEARN

CSO
8831 Keystone Crossing, Indianapolis, IN 46240
317.848.7800 | csoinc.net
© 2025 CSO Architects, Inc. All Rights Reserved

Howeler+Yoon Architecture
617.517.4101 howeleryoon.com

PROJECT:
BARTHOLOMEW CONSOLIDATED SCHOOL CORPORATION
MAPLE GROVE ELEMENTARY
TIPTON LAKES BLVD, COLUMBUS, IN 47201

SCOPE DRAWINGS:
These drawings indicate the general scope of the project in terms of architectural design concept, the dimensions of the building, the major architectural elements and the type of construction and mechanical systems required.
The drawings do not necessarily indicate or describe all work required for full performance and completion of the requirements of the Contract.
On the basis of the general scope indicated or described, the Contractor shall furnish all labor required for the proper execution and completion of the work.

REVISIONS:		
1	ADDENDUM #1	06/10/2025
2	ADDENDUM #2	06/17/2025

ISSUE DATE	DRAWN BY	CHECKED BY
05/30/2025	RNR	ECN

DRAWING TITLE:
FIRST FLOOR FINISH PLAN - UNIT D

CERTIFIED BY:
JAMES R. KUNK REGISTERED ARCHITECT AR09900003 STATE OF INDIANA

DRAWING NUMBER
A801D

PROJECT NUMBER
2024022

1 A802B SECOND FLOOR FINISH PLAN - UNIT B
SCALE: 1/8" = 1'-0"

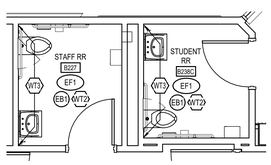

3 A802B SECOND FLOOR UNIT B RESTROOM B227/B238C
SCALE: 1/4" = 1'-0"

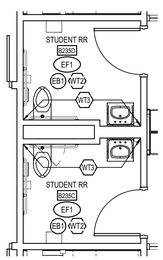

2 A802B TYPICAL SECOND FLOOR UNIT B RESTROOM
SCALE: 1/4" = 1'-0"

GENERAL FINISH NOTES

1. ANY DISCREPANCIES WITHIN THE DOCUMENTS SHOULD BE BROUGHT TO THE ATTENTION OF CSO ARCHITECTS PRIOR TO INSTALLATION. THESE DOCUMENTS WILL GOVERN OVER PREVIOUS SUPPLEMENTAL DRAWINGS.
2. THE SCHEDULED MATERIALS SHALL NOT BE INSTALLED BEFORE THE CONTRACTOR'S PHYSICAL COLOR SAMPLE SUBMITTALS HAVE BEEN APPROVED, AS REQUIRED BY THE SPECIFICATIONS. IF ANY MATERIAL IS INSTALLED BEFORE APPROVAL, THE CONTRACTOR WILL BE RESPONSIBLE FOR THE REMOVAL, REPLACEMENT PURCHASE, AND INSTALLATION OF ALL ERRONEOUS SPECIFICATIONS.
3. ALL SURFACES RECEIVING FINISHES SHALL BE PROPERLY PREPARED PER MANUFACTURERS' SPECIFICATIONS PRIOR TO INSTALLATION. CONTRACTOR SHALL BE RESPONSIBLE FOR FIELD VERIFYING CONDITIONS.
4. FOR CHANGE IN FLOOR FINISH MATERIALS OF DIFFERENT HEIGHTS, PROVIDE TRANSITION STRIP TO MEET CODE/ADA REQUIREMENTS.
5. WHEN FLOOR FINISHES TRANSITION AT DOOR OPENING, THE TRANSITION IS TO BE ON CENTER OF DOOR PANEL, U.N.O. SEE TRANSITION DETAILS ON A800 FOR ADDITIONAL INFORMATION.
6. WHERE CARPET TILE AND LVT TRANSITIONS OCCUR, INSTALL FACTORY FINISHED EDGE OF CARPET TO FACTORY FINISHED EDGE OF LVT; DO NOT USE CUT EDGES AT ANY TRANSITIONS.
7. SEE INTERIOR PAINT SPECIFICATIONS FOR SCHEDULE OF COATING TYPE PER SUBSTRATE AND SHEEN. CONTRACTOR TO PROVIDE CRISP, CLEAN LINES BETWEEN ALL PAINT TRANSITIONS.
8. ALL WALL MOUNTED GRILLES, METAL PANELS, MISC. METALS, ETC. ARE TO BE FACTORY FINISHED TO MATCH ADJACENT WALLS, U.N.O.
9. ALL CMU WALLS TO RECEIVE HIGH PERFORMANCE COATINGS (EP#).
10. DO NOT PAINT INTERIOR PRECAST PANELS OR OTHER FACTORY FINISHED ITEMS, U.N.O.
11. ALL EXPOSED STRUCTURAL ELEMENTS TO BE PAINTED (EP7), U.N.O. SEE SPECIFICATIONS FOR ADDITIONAL INFORMATION.
12. ALL HOLLOW METAL DOORS AND FRAMES ARE TO BE PAINTED TO MATCH ADJACENT WALL. PROPER SURFACE PREPARATION REQUIRED PER MANUFACTURER'S REQUIREMENTS. REFER TO SPECIFICATIONS FOR PAINT TYPE, SHEEN, AND ADDITIONAL INFORMATION.
13. ALL WOOD DOORS SPECIFIED TO BE PAINTED TO MATCH ADJACENT WALL SURFACE; REFER A501.
14. ALL GWB CEILINGS AND/OR SOFFITS/BULKHEADS TO HAVE FACES AND UNDERSIDE PAINTED TO MATCH ADJACENT WALLS, U.N.O. REFER TO REFLECTED CEILING PLANS AND SPECIFICATIONS FOR ALL CEILING MATERIALS, THEIR LOCATIONS, AND ADDITIONAL INFORMATION.
15. PAINT WALLS BEFORE INSTALLING MARKER BOARDS, TACKBOARDS, ETC.
16. WOOD DOORS TO BE WHITE MAPLE, STAINED TO MATCH LVT1. SEE SPECIFICATIONS FOR ADDITIONAL INFORMATION.
17. FOR CORNER GUARDS, REFER TO SPECIFICATIONS AND A900 SERIES FOR INFORMATION AND LOCATIONS. COLORS TO BE SELECTED FROM MANUFACTURER'S FULL RANGE, U.N.O. IN FINISH LEGEND ON A800. CORNER GUARDS TO BE APPLIED TO GWB ONLY.
18. WHERE WALL TILE OCCURS, ALL OUTSIDE CORNERS AND EXPOSED TILE EDGES ARE TO BE TRIMMED WITH SCHLUTER SCHIENE IN BRUSHED STAINLESS STEEL FINISH. SEE WALL TRANSITION DETAILS ON A800.
19. WALL TILE TO BE INSTALLED WITH THE MINIMUM RECOMMENDED GROUT THICKNESS PER TILE MANUFACTURER. GROUT COLOR TO BE SELECTED FROM MANUFACTURER'S FULL RANGE. REFER TO SPECIFICATIONS FOR ADDITIONAL INFORMATION.
20. PLASTIC TOILET PARTITIONS TO BE SELECTED FROM MANUFACTURER'S FULL RANGE. PARTITIONS MUST MEET NFPA 286. REFER TO SPECIFICATIONS FOR ADDITIONAL INFORMATION.
21. GYM WALL PADDING, BLEACHERS, AND EQUIPMENT FINISHES TO BE SELECTED FROM MANUFACTURER'S FULL RANGE. REFER TO 900 SERIES DRAWINGS AND SPECIFICATIONS FOR ADDITIONAL INFORMATION.
22. ALL CUSTODIAL MOP SINK LOCATIONS TO RECEIVE FRP; LENGTH AS NECESSARY, MINIMUM OF 2'-0" ON EITHER SIDE OF SINK. FRP TO START AT TOP OF BASE AND RUN FULL PANEL WIDTH (4'-0"). COLOR TO BE SELECTED FROM MANUFACTURER'S FULL RANGE.

FINISH TAG KEY

- XXX — FLOOR FINISH
- XX — BASE FINISH
- XX — WALL FINISH
- XXX / XXX — HORIZONTAL FINISH (COUNTERTOP) / VERTICAL FINISH (CASEWORK)
- XXX — COUNTERTOP, CASEWORK OR MISCELLANEOUS FINISH ONLY REFER TO FINISH LEGEND
- XX — ACCENT WALL FINISH
- FLOORING INSTALL DIRECTION

F# FINISH PLAN NOTES

F1 ALIGN FLOOR TRANSITION TO OUTSIDE CORNER OR AS INDICATED ON PLAN.
F2 INSTALL WALL TILE (WT1) FROM TOP OF RUBBER BASE (B1) TO ALIGN WITH TOP OF DOOR FRAME. EXPOSED TILE EDGES TO RECEIVE SCHULTER.
F3 INSTALL WALL TILE (WT2) FROM TOP OF RUBBER BASE (B1) TO UNDERSIDE OF BULKHEAD.
F4 INSTALL WALL TILE (WT1) FROM TOP OF RUBBER BASE (B1) TO 9'-0" AFF; PAINT (P1) ABOVE. REFER TO A800 FOR WALL TRANSITION DETAILS.
F5 INSTALL WALL TILE (WT2) FROM TOP OF RUBBER BASE (B1) TO 9'-1" AFF; PAINT (P2) ABOVE. REFER TO A800 FOR WALL TRANSITION DETAILS.
F6 INSTALL WALL TILE (WT2) FROM TOP OF RUBBER BASE (B1) TO 7'-0" AFF; PAINT (P2) ABOVE. REFER TO A800 FOR WALL TRANSITION DETAILS.
F7 INSTALL WALL TILE (WT1) FROM TOP OF RUBBER BASE (B1) TO 7'-0" AFF; PAINT (P1) ABOVE. REFER TO A800 FOR WALL TRANSITION DETAILS.
F8 INSTALL WALL TILE (WT1) FROM TOP OF RUBBER BASE (B1) TO 11'-0" AFF; PAINT (P1) ABOVE. REFER TO A800 FOR WALL TRANSITION DETAILS.
F9 CENTER COURT TO RECEIVE 12'-0" DIAMETER FOUR COLOR LOGO. LOGO TO BE SELECTED BY OWNER DURING CONSTRUCTION.
F10 COLOR ACCENT WALLS TO RECEIVE PLASTER VENEER. REFER TO GYPSUM VENEER PLASTERING 09 26 13.
F11 BASKETBALL GAMES LINES TO BE BLACK. VOLLEYBALL GAME LINES TO BE WHITE.
F12 ELEVATOR SIDE AND REAR WALL PANELS TO RECEIVE PLASTIC LAMINATE (PL1).

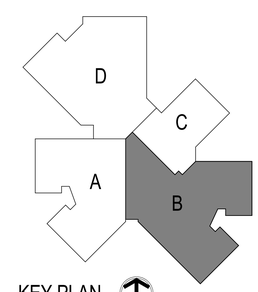

KEY PLAN
NORTH

BCSC TOGETHER WE LEARN

CSO
8831 Keystone Crossing, Indianapolis, IN 46240
317.848.7800 | csoinc.net

© 2025 CSO Architects, Inc. All Rights Reserved

Howeler+Yoon Architecture
617.517.4101 howeleryoon.com

PROJECT:
BARTHOLOMEW CONSOLIDATED SCHOOL CORPORATION
MAPLE GROVE ELEMENTARY
TIPTON LAKES BLVD, COLUMBUS, IN 47201

SCOPE DRAWINGS:
These drawings indicate the general scope of the project in terms of architectural design concept, the dimensions of the building, the major architectural elements and the type and general quality of construction and finishes.
The drawings do not necessarily indicate or describe all work required for full performance and completion of the requirements of the Contract.
On the basis of the general scope indicated or described, the contractor shall furnish all labor and materials required for the proper execution and completion of the work.

REVISIONS:

ISSUE DATE	DRAWN BY	CHECKED BY
05/30/2025	RNR	ECN

DRAWING TITLE:
SECOND FLOOR FINISH PLAN - UNIT B

CERTIFIED BY:
JAMES R. RUDISILL REGISTERED AR0900003 STATE OF INDIANA ARCHITECT

DRAWING NUMBER
A802B

PROJECT NUMBER
2024022

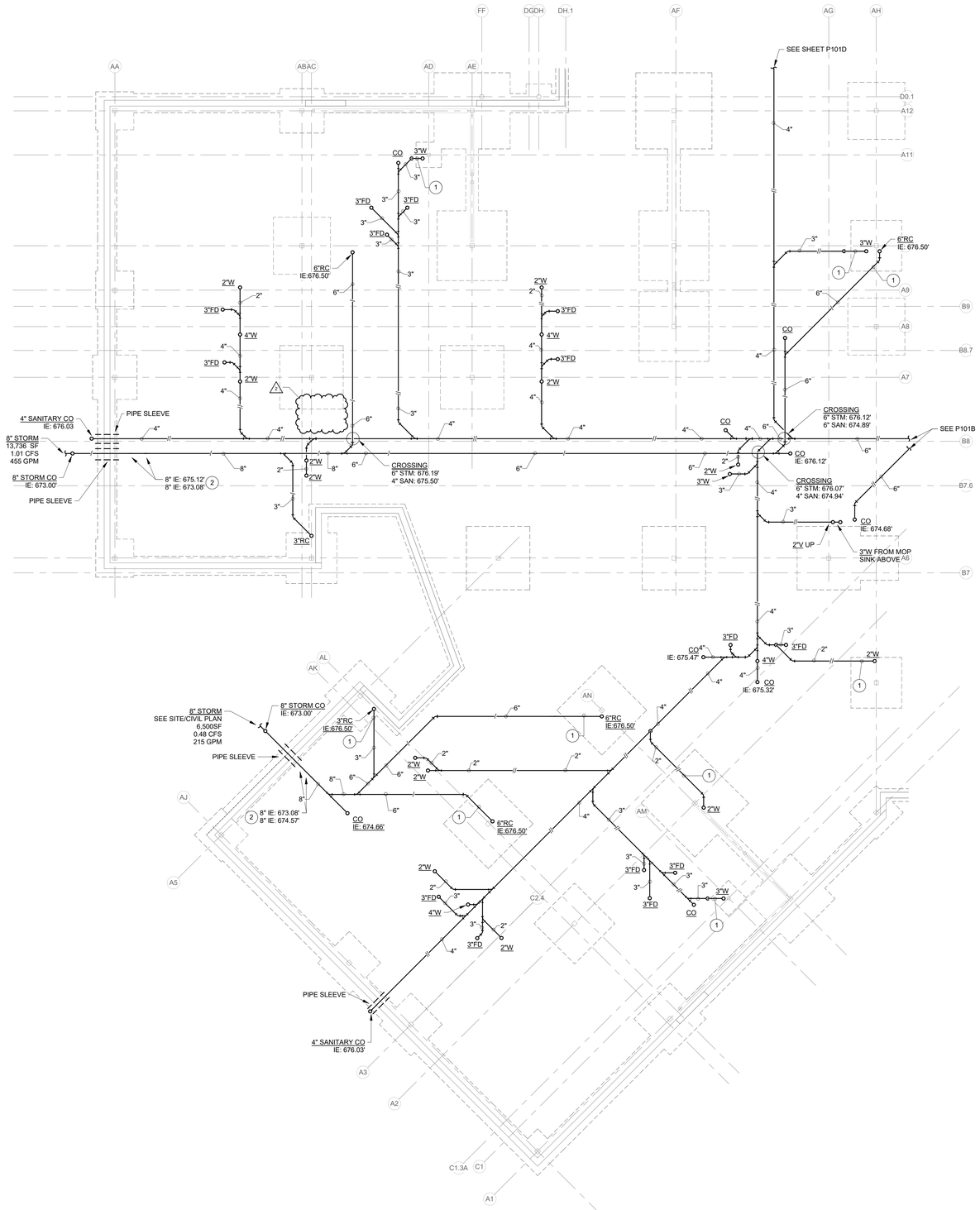

UNDERSLAB - UNIT A - PLUMBING

SCALE: 1/8" = 1'-0"

F.F.E. 678.00'

NORTH

GENERAL NOTES:

1. SEE PM001 FOR GENERAL NOTES.

PLAN NOTES:

1. PIPING ROUTED ON TOP OF FOOTING.
2. ROLL 8" STORM PIPING DOWN AND ROUTE PIPING UNDER FOOTING.

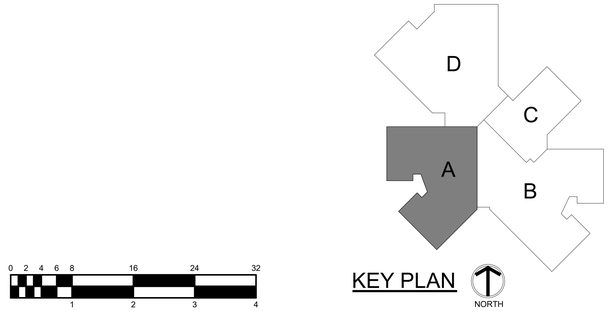

KEY PLAN

NORTH

BCSC
TOGETHER WE LEARN

CSO
8831 Keystone Crossing, Indianapolis, IN 46240
317.848.7800 | csoinc.net

© 2018 CSO Architects, Inc. All Rights Reserved

Höweler+Yoon Architecture
617.517.4101 howeleryoon.com

D&A #24063

R.E. Dimond and Associates, Inc.
Consulting Engineers
732 North Capitol Avenue
Indianapolis, IN 46204
Phone: (317) 634-4672
Fax: (317) 638-8725

PROJECT:
BARTHOLOMEW CONSOLIDATED SCHOOL CORPORATION
MAPLE GROVE ELEMENTARY
TIPTON LAKES BLVD, COLUMBUS, IN 47201

SCOPE DRAWINGS:
These drawings indicate the general scope of the project in terms of architectural design concept, the dimensions of the building, the major architectural elements and the type of structural, mechanical and electrical systems.
The drawings do not necessarily indicate or describe all work required for full performance and completion of the requirements of the Contract.
On the basis of the general scope indicated or described, the trade contractors shall furnish all items required for the proper execution and completion of the work.

REVISIONS:

2	Addendum #2	06/17/2025

ISSUE DATE	DRAWN BY	CHECKED BY
05/30/2025	TJG	JMC

DRAWING TITLE:
UNDERSLAB PLAN - UNIT A - PLUMBING

CERTIFIED BY:
Joseph Michael Chrapla
REGISTERED
No. PE11700335
STATE OF INDIANA
PROFESSIONAL ENGINEER
06/30/2025

DRAWING NUMBER
P101A

PROJECT NUMBER
2024022

GENERAL NOTES:

1. SEE PM001 FOR GENERAL NOTES.

PLAN NOTES:

1. PIPING ROUTED ON TOP OF FOOTING.
2. ROLL 8" STORM PIPING DOWN AND ROUTE PIPING UNDER FOOTING.

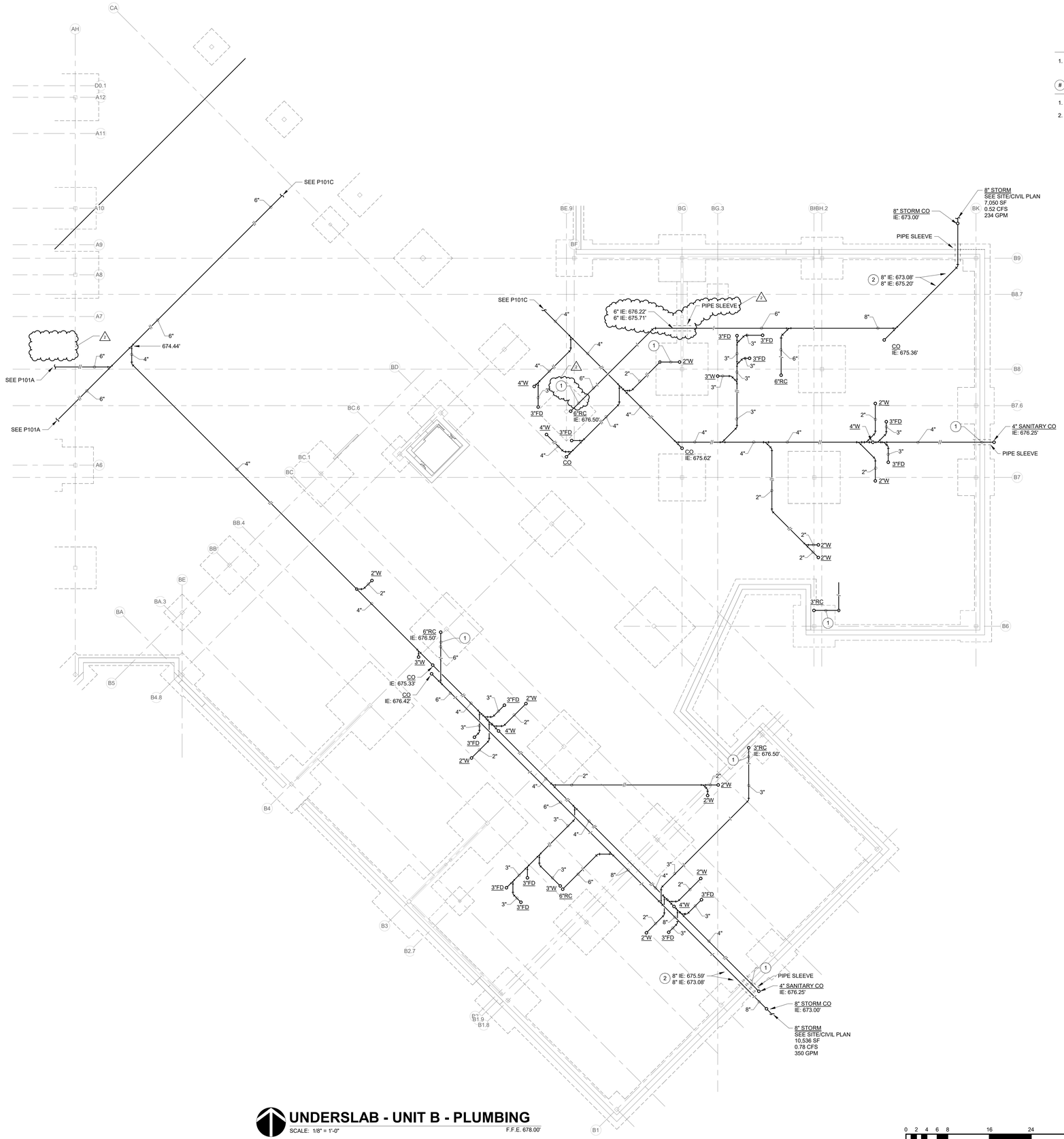

UNDERSLAB - UNIT B - PLUMBING

SCALE: 1/8" = 1'-0"

F.F.E. 678.00'

NORTH

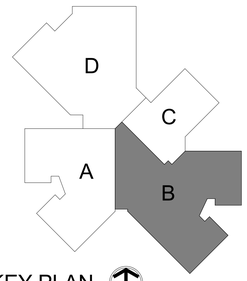

KEY PLAN

NORTH

BCSC
TOGETHER WE LEARN

CSO
8831 Keystone Crossing, Indianapolis, IN 46240
317.848.7800 | csoinc.net

© 2018 CSO Architects, Inc. All Rights Reserved

Howeler+Yoon Architecture
617.517.4101 howeleryoon.com

D&A #24063

R.E. Dimond and Associates, Inc.
Consulting Engineers
732 North Capitol Avenue
Indianapolis, IN 46204
Phone: (317) 634-4672
Fax: (317) 638-8725

PROJECT:
BARTHOLOMEW CONSOLIDATED SCHOOL CORPORATION
MAPLE GROVE ELEMENTARY
TIPTON LAKES BLVD, COLUMBUS, IN 47201

SCOPE DRAWINGS:
These drawings indicate the general scope of the project in terms of architectural design concept, the dimensions of the building, the major architectural elements and the type of construction and mechanical and electrical systems.
The drawings do not necessarily indicate or describe all work required for full performance and completion of the requirements of the Contract.
On the basis of the general scope indicated or described, the contractor shall furnish all labor and materials required for the proper execution and completion of the work.

REVISIONS:

2	Addendum #2	06/17/2025

ISSUE DATE	DRAWN BY	CHECKED BY
05/30/2025	TJG	JMC

DRAWING TITLE:
UNDERSLAB PLAN - UNIT B - PLUMBING

CERTIFIED BY:
Joseph Michael Chenoweth
REGISTERED
No. PE11700335
STATE OF INDIANA
PROFESSIONAL ENGINEER
05/30/2025

DRAWING NUMBER
P101B

PROJECT NUMBER
2024022

GENERAL NOTES:

1. SEE PM001 FOR GENERAL NOTES.
2. ALL GREASE WASTE PIPING TO BE SCH 40 CAST IRON, NO HUB PIPING.
3. REFER TO STRUCTURAL ENGINEER DRAWINGS FOR ADDITIONAL INFORMATION AND DETAILS FOR SLEEVE THRU FOOTING/THICKENED SLABS.

PLAN NOTES:

1. 4" DOMESTIC COLD WATER SERVICE UP. SEE SITE/CIVIL SHEETS.
2. 6" FIRE SERVICE WATER UP. SEE SITE/CIVIL SHEETS.
3. 3" FROM MOP SINK ABOVE.
4. 2" VENT UP.
5. SCH 40 CAST IRON, NO HUB GREASE WASTE PIPING.
6. PIPING ROUTED ON TOP OF FOOTING.
7. ROLL 8" STORM PIPING DOWN AND ROUTE PIPING UNDER FOOTING.

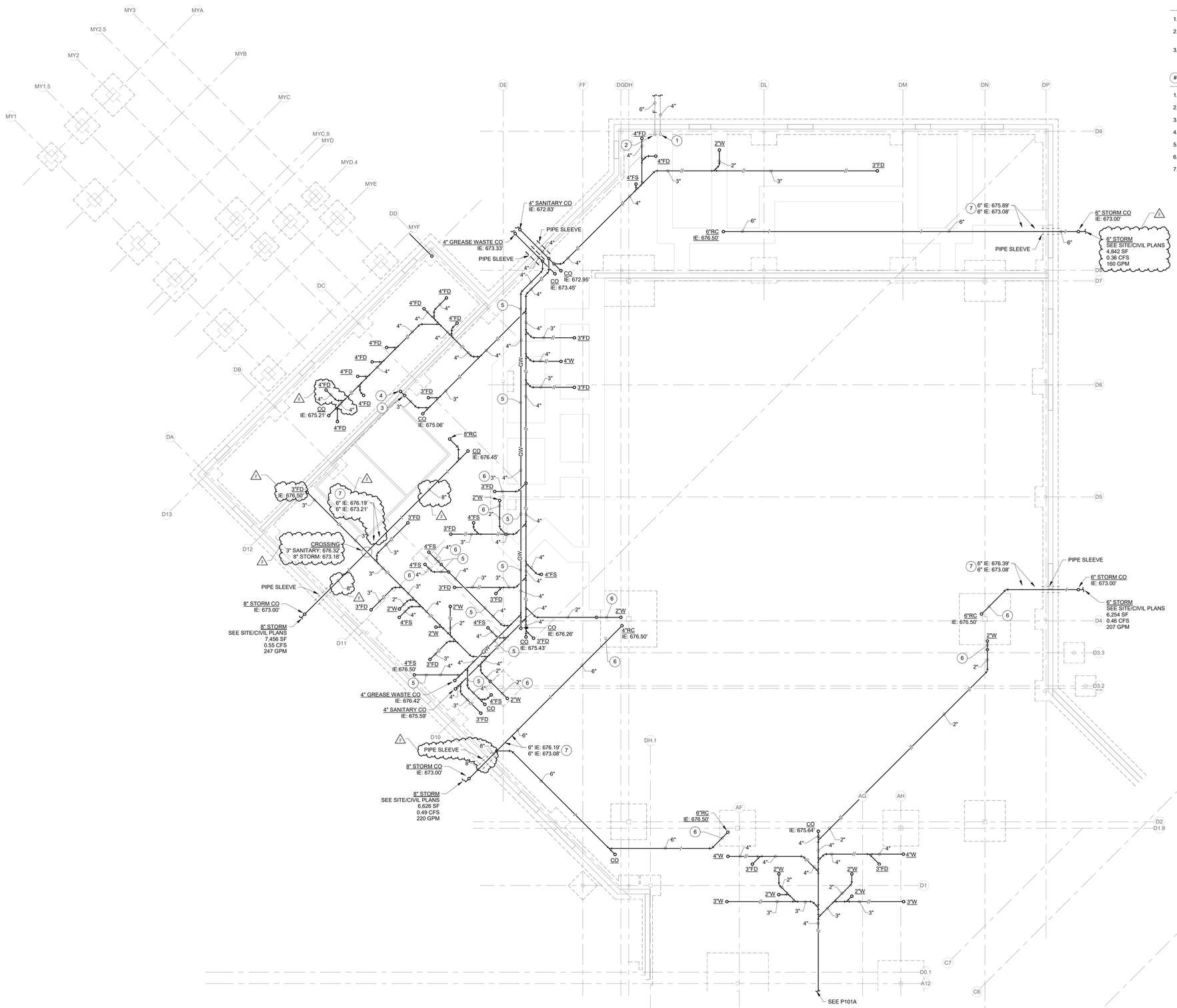

UNDERSLAB - UNIT D - PLUMBING

NORTH

SCALE: 1/8" = 1'-0"

F.F.E. 678.00'

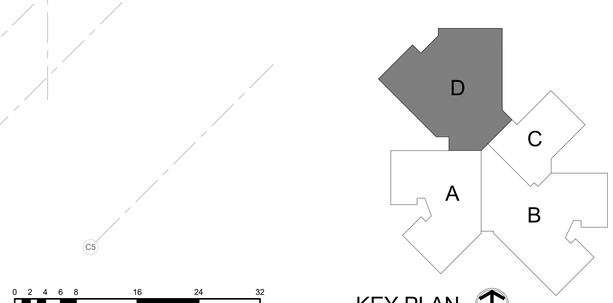

KEY PLAN

NORTH

BCSC
TOGETHER WE LEARN

CSO
8831 Keystone Crossing, Indianapolis, IN 46240
317.848.7800 | csoinc.net

© 2018 CSO Architects, Inc. All Rights Reserved

Höweler+Yoon Architecture
617.517.4101 howeleryoon.com

D&A #24063

R.E. Dimond and Associates, Inc.
Consulting Engineers
732 North Capitol Avenue
Indianapolis, IN 46204
Phone: (317) 634-4672
Fax: (317) 638-8725

PROJECT:
BARTHOLOMEW CONSOLIDATED SCHOOL CORPORATION
MAPLE GROVE ELEMENTARY
TIPTON LAKES BLVD, COLUMBUS, IN 47201

SCOPE DRAWINGS:
These drawings indicate the general scope of the project in terms of architectural design concept, the dimensions of the building, the major architectural elements and the type of structural, mechanical and electrical systems.
The drawings do not necessarily indicate or describe all work required for the performance and completion of the requirements of the Contract.
On the basis of the general scope indicated or described, the trade contractors shall furnish all items required for the proper execution and completion of the work.

REVISIONS:

2	Addendum #2	06/17/2025

ISSUE DATE	DRAWN BY	CHECKED BY
05/30/2025	TJG	JMC

DRAWING TITLE:
UNDERSLAB PLAN - UNIT D - PLUMBING

CERTIFIED BY:
Joseph Michael Chrisco
REGISTERED
No. PE11700335
STATE OF INDIANA
PROFESSIONAL ENGINEER
06/30/2025

DRAWING NUMBER
P101D

PROJECT NUMBER
2024022

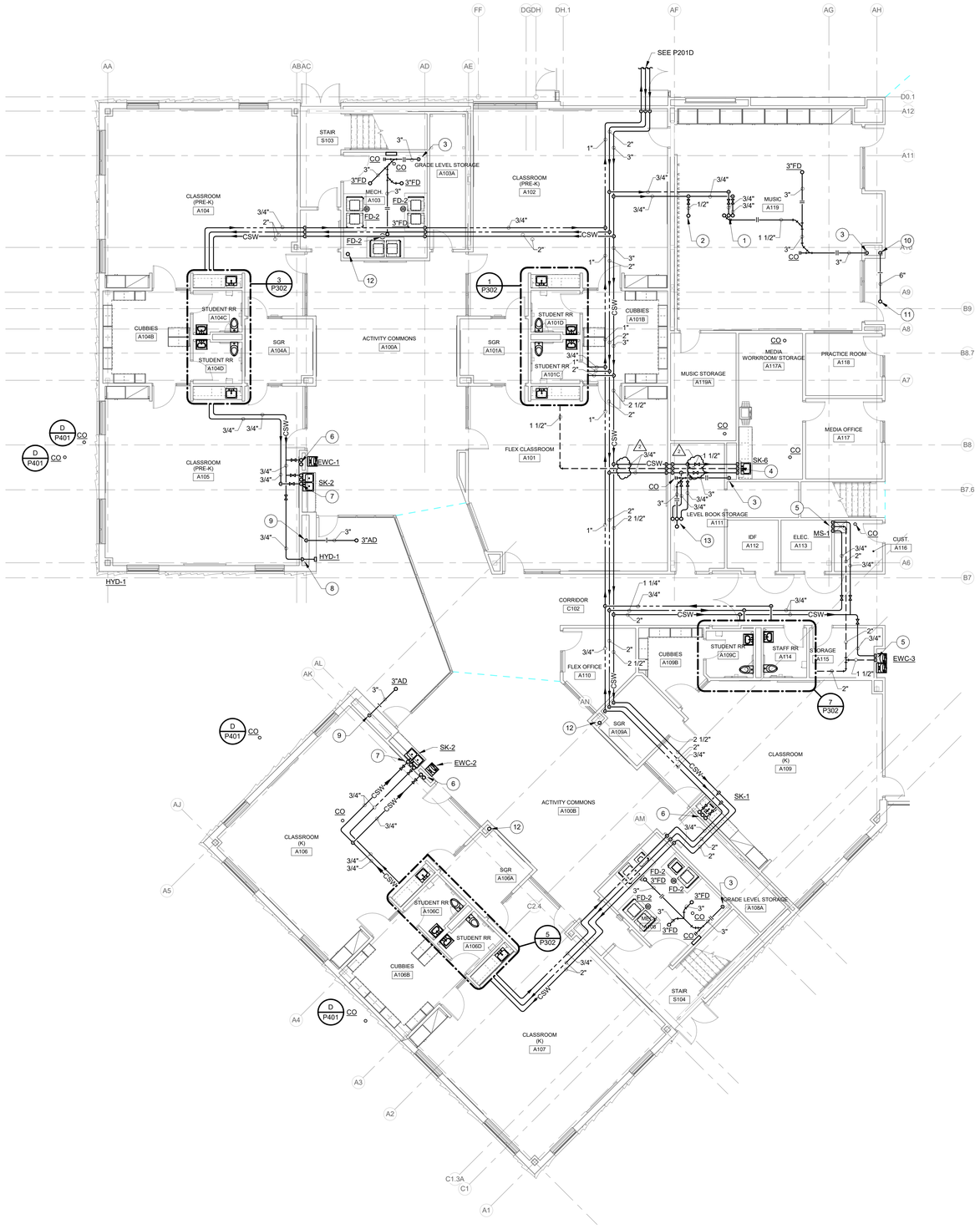

FIRST FLOOR - UNIT A - PLUMBING

SCALE: 1/8" = 1'-0"

NORTH

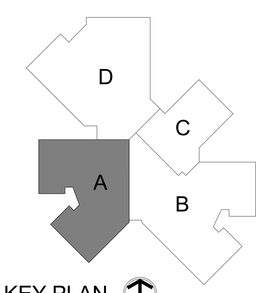

KEY PLAN

NORTH

GENERAL NOTES:

1. SEE PM001 FOR GENERAL NOTES.

PLAN NOTES:

1. 3/4" HOT WATER AND 3/4" COLD SOFT WATER UP. 1 1/2" WASTE FROM ABOVE.
2. 3/4" COLD SOFT WATER UP.
3. 3" WASTE DOWN.
4. 3/4" HOT WATER AND 3/4" COLD SOFT WATER DOWN. 1 1/2" WASTE DOWN. 1 1/2" VENT UP.
5. 3/4" HOT WATER AND 3/4" COLD SOFT WATER DOWN. 2" VENT FROM BELOW.
6. 3/4" HOT WATER AND 3/4" COLD SOFT WATER DOWN. 3/4" HOT WATER AND 3/4" COLD SOFT WATER UP. 2" COMBINATION WASTE AND VENT STACK..
7. 3/4" COLD SOFT WATER DOWN. 3/4" COLD SOFT WATER UP. 2" COMBINATION WASTE AND VENT STACK.
8. 3/4" COLD SOFT WATER DOWN.
9. 3" STORM DOWN.
10. 6" STORM DOWN.
11. 6" STORM FROM ABOVE.
12. 6" ROOF CONDUCTOR.
13. 3/4" HOT WATER AND 3/4" COLD SOFT WATER UP. 3" WASTE FROM MOP SINK ABOVE. 2" VENT UP.

BCSC TOGETHER WE LEARN

CSO
8831 Keystone Crossing, Indianapolis, IN 46240
317.848.7800 | csoinc.net

© 2018 CSO Architects, Inc. All Rights Reserved

Höweler+Yoon Architecture
617.517.4101 howeleryoon.com

D&A #24063

R.E. Dimond and Associates, Inc.
Consulting Engineers
732 North Capitol Avenue
Indianapolis, IN 46204
Phone: (317) 634-4672
Fax: (317) 638-8725

PROJECT:
BARTHOLOMEW CONSOLIDATED SCHOOL CORPORATION
MAPLE GROVE ELEMENTARY
TIPTON LAKES BLVD, COLUMBUS, IN 47201

SCOPE DRAWINGS:
These drawings indicate the general scope of the project in terms of architectural design concept, the dimensions of the building, the major architectural elements and the type of structural, mechanical and electrical systems.
The drawings do not necessarily indicate or describe all work required for full performance and completion of the requirements of the Contract.
On the basis of the general scope indicated or described, the trade contractors shall furnish all items required for the proper execution and completion of the work.

REVISIONS:

2	Addendum #2	06/17/2025

ISSUE DATE	DRAWN BY	CHECKED BY
05/30/2025	TJG	JMC

DRAWING TITLE:
FIRST FLOOR PLAN - UNIT A - PLUMBING

CERTIFIED BY:
Joseph Michael Chrapla
REGISTERED
No. PE11700335
STATE OF INDIANA
PROFESSIONAL ENGINEER
05/30/2025

DRAWING NUMBER
P201A

PROJECT NUMBER
2024022

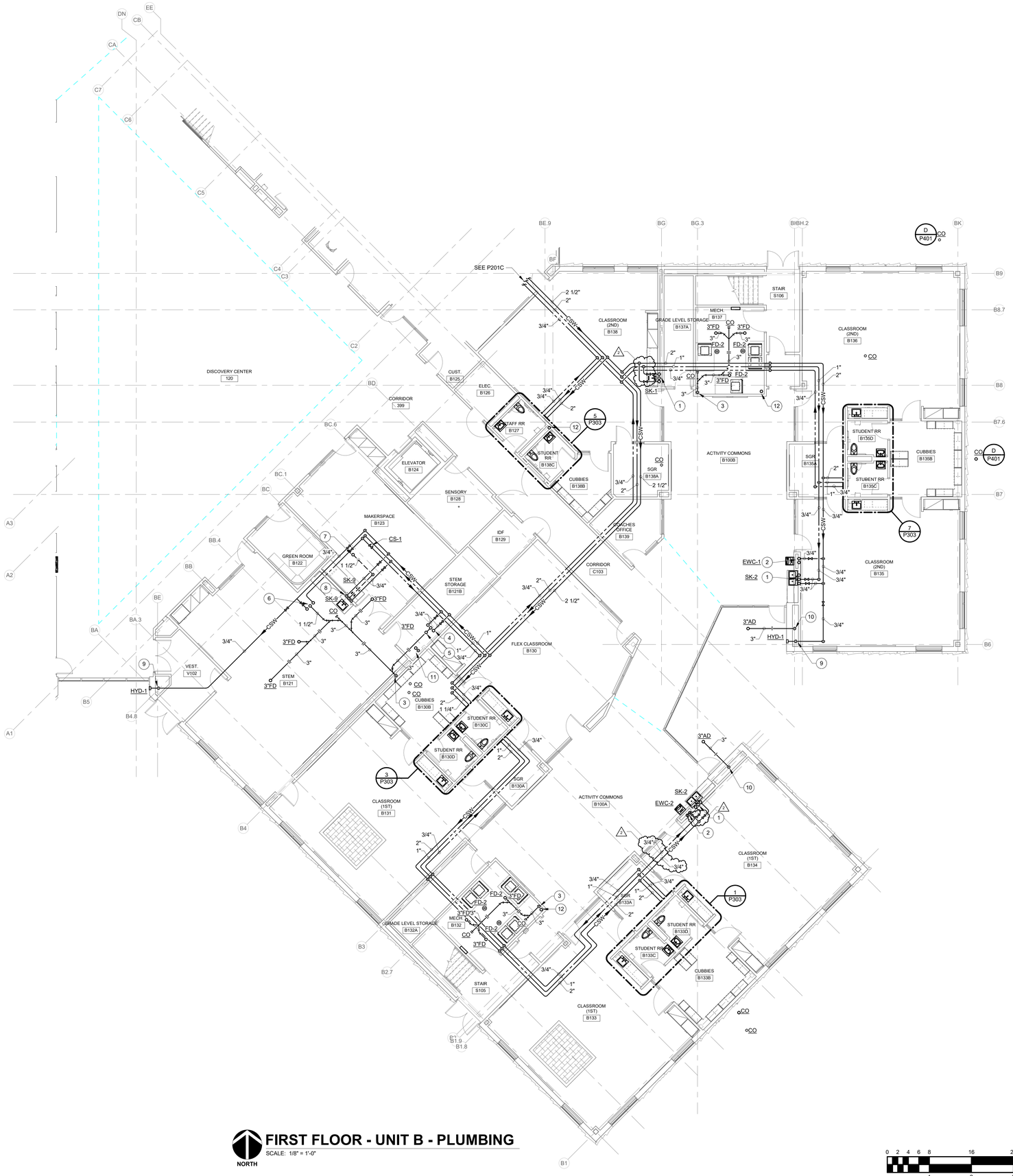

FIRST FLOOR - UNIT B - PLUMBING

SCALE: 1/8" = 1'-0"

NORTH

GENERAL NOTES:

1. SEE PM001 FOR GENERAL NOTES.

PLAN NOTES:

1. 3/4" HOT WATER AND 3/4" COLD SOFT WATER DOWN. 3/4" HOT WATER AND 3/4" COLD SOFT WATER UP. 2" COMBINATION WASTE AND VENT STACK.
2. 3/4" COLD SOFT WATER DOWN. 3/4" COLD SOFT WATER UP. 2" COMBINATION WASTE AND VENT STACK.
3. 3" WASTE DOWN.
4. 3/4" HOT WATER AND 3/4" COLD SOFT WATER UP. 2" VENT UP.
5. 3" FROM MOP SINK ABOVE.
6. 3/4" HOT WATER AND 3/4" COLD SOFT WATER UP. 1 1/2" WASTE FROM ABOVE.
7. 1 1/2" VENT UP.
8. 3/4" HOT WATER AND 3/4" COLD SOFT WATER DOWN. 1 1/2" WASTE DOWN. 1 1/2" VENT UP.
9. 3/4" COLD SOFT WATER DOWN.
10. 3" STORM DOWN.
11. 6" STORM FROM ABOVE. 6" STORM DOWN.
12. 6" ROOF CONDUCTOR.

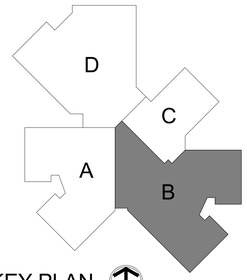

KEY PLAN

NORTH

BCSC TOGETHER WE LEARN

CSO
8831 Keystone Crossing, Indianapolis, IN 46240
317.848.7800 | csoinc.net

© 2018 CSO Architects, Inc. All Rights Reserved

Howeler+Yoon Architecture
617.517.4101 howeleryoon.com

D&A #24063

R.E. Dimond and Associates, Inc.
Consulting Engineers
732 North Capitol Avenue
Indianapolis, IN 46204
Phone: (317) 634-4672
Fax: (317) 638-8725

PROJECT:

BARTHOLOMEW CONSOLIDATED SCHOOL CORPORATION
MAPLE GROVE ELEMENTARY
TIPTON LAKES BLVD, COLUMBUS, IN 47201

SCOPE DRAWINGS:

These drawings are intended to convey the scope of the project in terms of architectural design concept, the dimensions of the building, the major architectural elements and the type of structural, mechanical and electrical systems.

The drawings do not necessarily indicate or describe all work required to the satisfactory outcome and completion of the requirements of the Contract.

On the basis of the general scope indicated or described, the trade contractors shall furnish all items required for the proper execution and completion of the work.

REVISIONS:

2	Addendum #2	06/17/2025

ISSUE DATE	DRAWN BY	CHECKED BY
05/30/2025	TJG	JMC

DRAWING TITLE:

FIRST FLOOR PLAN - UNIT B - PLUMBING

CERTIFIED BY:

Joseph Michael Clayton REGISTERED No. PE11700335 STATE OF INDIANA PROFESSIONAL ENGINEER

06/30/2025

DRAWING NUMBER

P201B

PROJECT NUMBER

2024022

GENERAL NOTES:

1. SEE PM001 FOR GENERAL NOTES.

PLAN NOTES:

1. 3/4" HOT WATER AND 1 1/2" COLD SOFT WATER DOWN. 4" WASTE DOWN. 2" VENT UP.
2. 3/4" HOT WATER RETURN FROM BELOW.
3. 3/4" HOT WATER AND 3/4" COLD SOFT WATER DOWN. 1 1/2" WASTE DOWN. 1 1/2" VENT UP.
4. 3/4" HOT WATER AND 3/4" COLD SOFT WATER DOWN. 2" VENT FROM BELOW.
5. 3/4" COLD SOFT WATER DOWN.
6. 2" VENT UP. 3" VENT THRU ROOF.
7. 3" WASTE DOWN.
8. 3" FROM FLOOR DRAIN ABOVE.
9. 8" ROOF CONDUCTOR.
10. 3/4" HOT WATER AND 3/4" COLD SOFT WATER DOWN. 2" WASTE DOWN. 1 1/2" VENT UP.

FIRST FLOOR - UNIT C - PLUMBING

SCALE: 1/8" = 1'-0"

NORTH

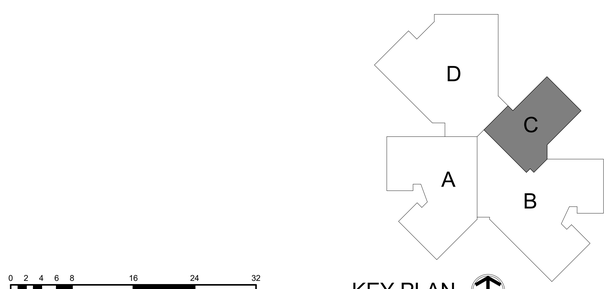

KEY PLAN

NORTH

0 2 4 6 8 16 24 32

1 2 3 4

BCSC TOGETHER WE LEARN

CSO

8831 Keystone Crossing, Indianapolis, IN 46240
317.848.7800 | csoinc.net

© 2018 CSO Architects, Inc. All Rights Reserved

Höweler+Yoon Architecture
617.517.4101 howeleryoon.com

D&A #24063

R.E. Dimond and Associates, Inc.
Consulting Engineers

732 North Capitol Avenue
Indianapolis, IN 46204
Phone: (317) 634-4672
Fax: (317) 638-8725

PROJECT:

BARTHOLOMEW CONSOLIDATED SCHOOL CORPORATION

MAPLE GROVE ELEMENTARY

TIPTON LAKES BLVD, COLUMBUS, IN 47201

SCOPE DRAWINGS:

These drawings indicate the general scope of the project in terms of architectural design concept, the dimensions of the building, the major architectural elements and the type of construction and mechanical and electrical systems.

The drawings do not necessarily indicate or describe all work required for full performance and completion of the requirements of the Contract.

Only the tasks of the general scope indicated or described, the trade contractor shall furnish all items required for the proper execution and completion of the work.

REVISIONS:

2	Addendum #2	06/17/2025

ISSUE DATE	DRAWN BY	CHECKED BY
05/30/2025	TJG	JMC

DRAWING TITLE:

FIRST FLOOR PLAN - UNIT C - PLUMBING

CERTIFIED BY:

Joseph Michael Chaney
REGISTERED
No. PE11700335
STATE OF INDIANA
PROFESSIONAL ENGINEER

05/30/2025

DRAWING NUMBER

P201C

PROJECT NUMBER

2024022

GENERAL NOTES:

1. SEE PM001 FOR GENERAL NOTES.

PLAN NOTES:

1. 3/4" COLD SOFT WATER DOWN.
2. 3/4" HOT WATER AND 3/4" COLD SOFT WATER DOWN. 2" WASTE DOWN. 2" VENT UP.
3. 2" VENT UP. 4" VENT THRU ROOF.
4. 3/4" HOT WATER AND 1 1/2" COLD SOFT WATER DOWN. 4" WASTE DOWN. 2" VENT UP.
5. 3/4" HOT WATER RETURN FROM BELOW.
6. 3/4" COLD SOFT WATER DOWN. 1 1/2" WASTE DOWN. 1 1/2" VENT UP.
7. 1 1/2" VENT UP. 3" VENT THRU ROOF.
8. 3" STORM FROM ABOVE.
9. 4" STORM FROM ABOVE. 4" STORM DOWN.
10. 6" STORM CONDUCTOR DOWN.

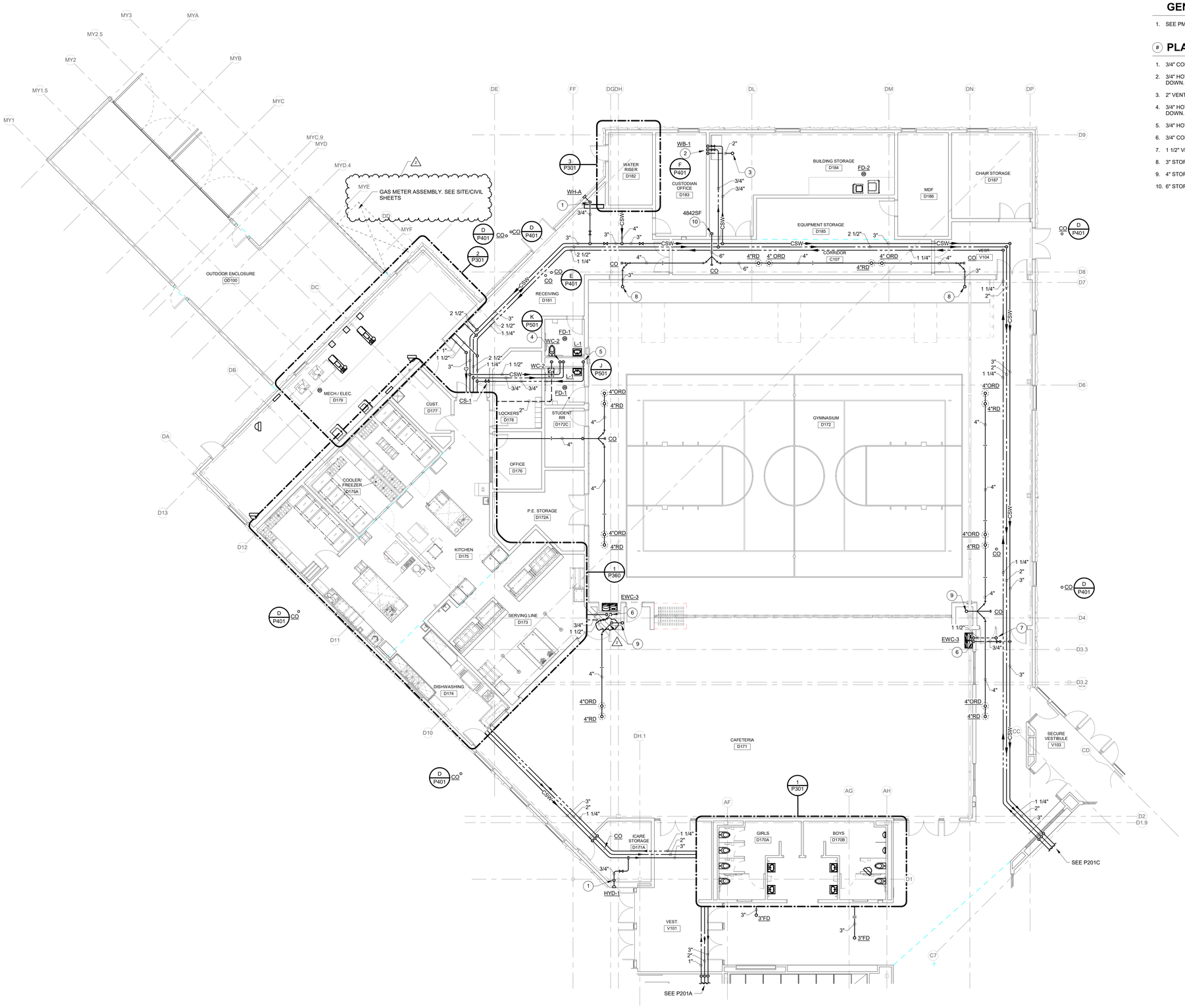

FIRST FLOOR - UNIT D - PLUMBING

SCALE: 1/8" = 1'-0"

NORTH

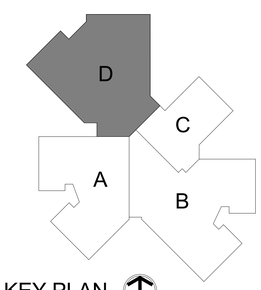

KEY PLAN

NORTH

BCSC TOGETHER WE LEARN

CSO
8831 Keystone Crossing, Indianapolis, IN 46240
317.848.7800 | csoinc.net

© 2018 CSO Architects, Inc. All Rights Reserved

Höweler+Yoon Architecture
617.517.4101 howeleryoon.com

D&A #24063

R.E. Dimond and Associates, Inc.
Consulting Engineers
732 North Capitol Avenue
Indianapolis, IN 46204
Phone: (317) 634-4672
Fax: (317) 638-8725

PROJECT:
BARTHOLOMEW CONSOLIDATED SCHOOL CORPORATION
MAPLE GROVE ELEMENTARY
TIPTON LAKES BLVD, COLUMBUS, IN 47201

SCOPE DRAWINGS:
These drawings indicate the general scope of the project in terms of architectural design concept, the dimensions of the building, the major architectural elements and the type of structural, mechanical and electrical systems.
The drawings do not necessarily indicate or describe all work required for the performance and completion of the requirements of the Contract.
On the basis of the general scope indicated or described, the trade contractors shall furnish all items required for the proper execution and completion of the work.

REVISIONS:

2	Addendum #2	06/17/2025

ISSUE DATE	DRAWN BY	CHECKED BY
05/30/2025	TJG	JMC

DRAWING TITLE:
FIRST FLOOR PLAN - UNIT D - PLUMBING

CERTIFIED BY:
Joseph Michael Cipriano
REGISTERED
No. PE11700335
STATE OF INDIANA
PROFESSIONAL ENGINEER
06/30/2025

DRAWING NUMBER
P201D

PROJECT NUMBER
2024022

GENERAL NOTES:

1. SEE PM001 FOR GENERAL NOTES.

PLAN NOTES:

1. 3/4" HOT WATER AND 3/4" COLD SOFT WATER FROM BELOW. COMBINATION 2" WASTE AND VENT STACK. 2" VENT UP.
2. 3/4" COLD SOFT WATER FROM BELOW. COMBINATION 2" WASTE AND VENT STACK. 2" VENT UP.
3. 3/4" HOT WATER AND 3/4" COLD SOFT WATER FROM BELOW. 2" VENT FROM BELOW.
4. 1 1/2" VENT FROM BELOW.
5. 3/4" HOT WATER AND 3/4" COLD SOFT WATER FROM BELOW. 1 1/2" WASTE DOWN. 1 1/2" VENT UP.
6. 2" VENT UP. 3" VENT THRU ROOF.
7. 6" STORM DOWN.

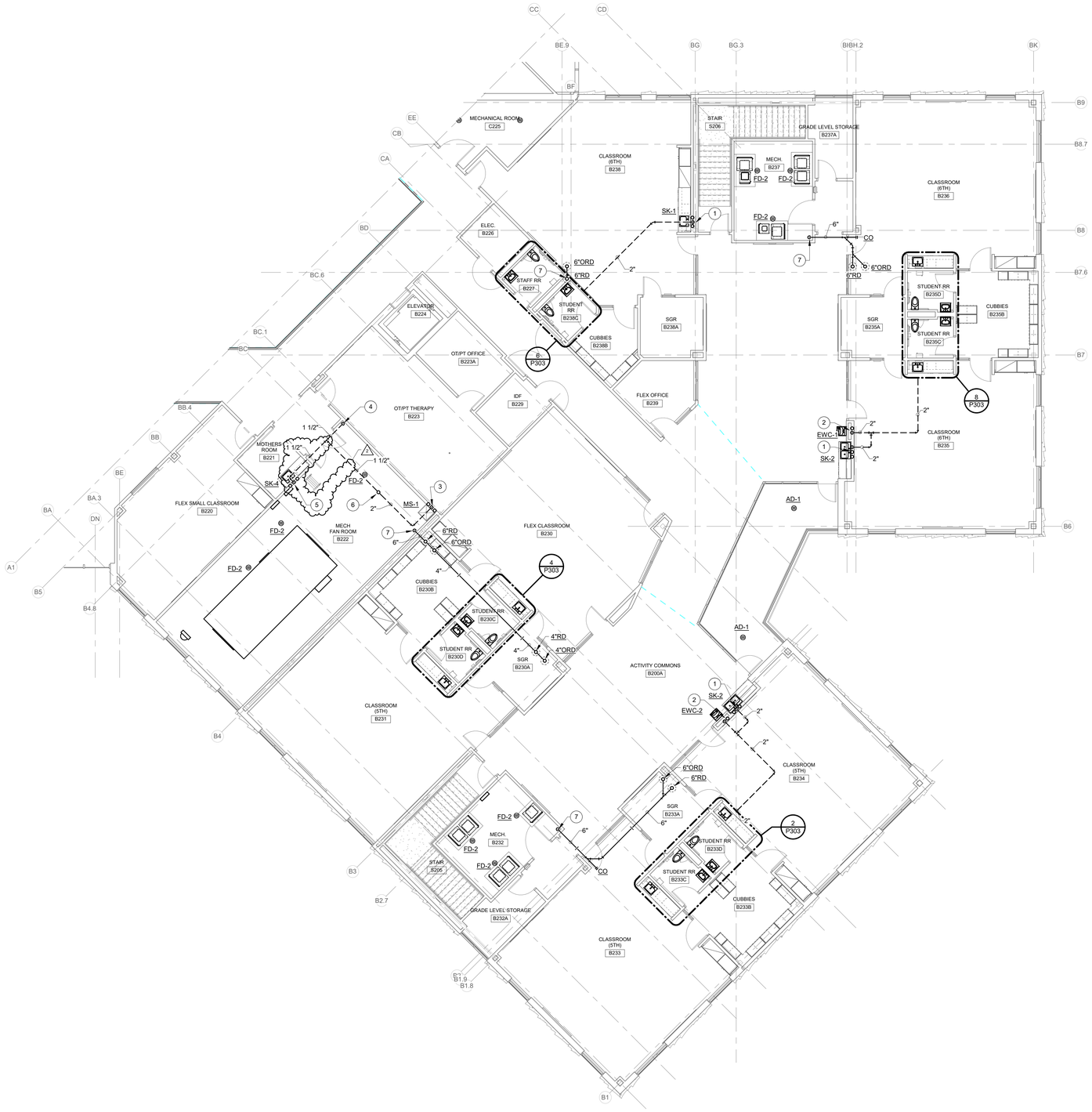

SECOND FLOOR - UNIT B - PLUMBING

SCALE: 1/8" = 1'-0"

NORTH

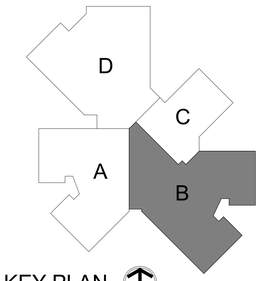

KEY PLAN

NORTH

0 2 4 6 8 16 24 32

1 2 3 4

BCSC TOGETHER WE LEARN

CSO
8831 Keystone Crossing, Indianapolis, IN 46240
317.848.7800 | csoinc.net

© 2018 CSO Architects, Inc. All Rights Reserved

Howeler+Yoon Architecture
617.517.4101 howeleryoon.com

D&A #24063

R.E. Dimond and Associates, Inc.
Consulting Engineers
732 North Capitol Avenue
Indianapolis, IN 46204
Phone: (317) 634-4672
Fax: (317) 638-8725

PROJECT:
BARTHOLOMEW CONSOLIDATED SCHOOL CORPORATION
MAPLE GROVE ELEMENTARY
TIPTON LAKES BLVD, COLUMBUS, IN 47201

SCOPE DRAWINGS:
These drawings indicate the general scope of the project in terms of architectural design concept, the dimensions of the building, the major architectural elements and the type of construction and mechanical and electrical systems.
The drawings do not necessarily indicate or describe all work required for full performance and completion of the requirements of the Contract.
On the basis of the general scope indicated or described, the Contractor shall furnish all labor and materials required for the proper execution and completion of the work.

REVISIONS:

2	Addendum #2	06/17/2025

ISSUE DATE	DRAWN BY	CHECKED BY
05/30/2025	TJG	JMC

DRAWING TITLE:
SECOND FLOOR PLAN - UNIT B - PLUMBING

CERTIFIED BY:
Joseph Michael Chesnut REGISTERED No. PE11700335 STATE OF INDIANA PROFESSIONAL ENGINEER
05/30/2025

DRAWING NUMBER
P202B

PROJECT NUMBER
2024022

GENERAL NOTES:

1. SEE PM001 FOR GENERAL NOTES.

PLAN NOTES:

1. 2" VENT FROM BELOW. 2" VENT UP. 4" VENT THRU ROOF.
2. 4" VENT FROM BELOW. 4" VENT UP. 4" VENT THRU ROOF.
3. 8" STORM DOWN.

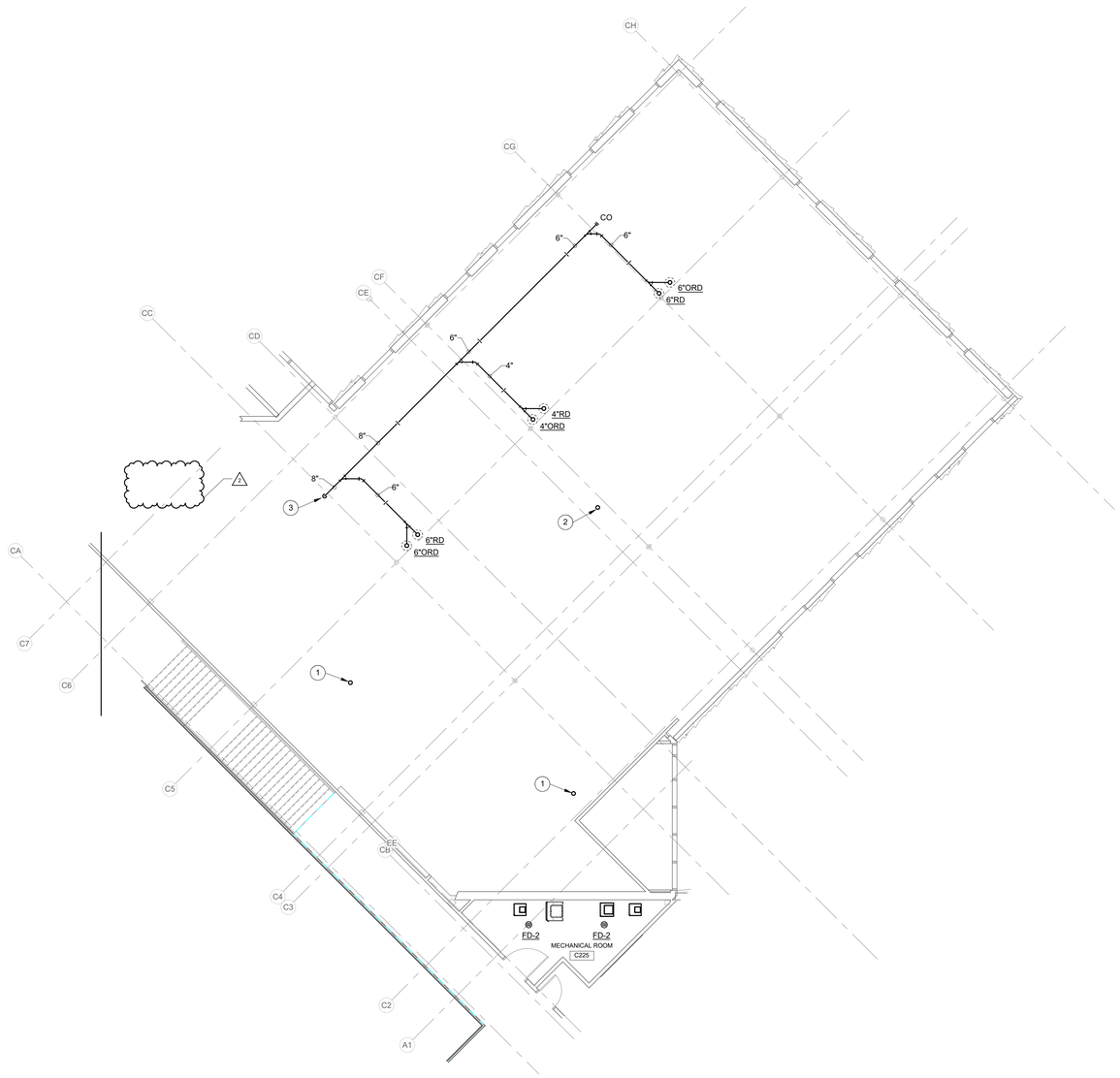

SECOND FLOOR - UNIT C - PLUMBING

SCALE: 1/8" = 1'-0"

NORTH

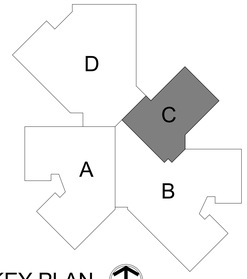

KEY PLAN

NORTH

0 2 4 6 8 16 24 32

1 2 3 4

BCSC
TOGETHER WE LEARN

CSO
8831 Keystone Crossing, Indianapolis, IN 46240
317.848.7800 | csoinc.net

© 2018 CSO Architects, Inc. All Rights Reserved

Höweler+Yoon Architecture
617.517.4101 howeleryoon.com

D&A #24063

R.E. Dimond and Associates, Inc.
Consulting Engineers

732 North Capitol Avenue
Indianapolis, IN 46204
Phone: (317) 634-4672
Fax: (317) 638-8725

PROJECT:
BARTHOLOMEW CONSOLIDATED SCHOOL CORPORATION
MAPLE GROVE ELEMENTARY
TIPTON LAKES BLVD, COLUMBUS, IN 47201

SCOPE DRAWINGS:
These drawings indicate the general scope of the project in terms of architectural design concept, the dimensions of the building, the major architectural elements and the type of structural, mechanical and electrical systems.
The drawings do not necessarily indicate or describe all work required for full performance and completion of the requirements of the Contract.
On the basis of the general scope indicated or described, the trade contractors shall furnish all items required for the proper execution and completion of the work.

REVISIONS:

2	Addendum #2	06/17/2025

ISSUE DATE	DRAWN BY	CHECKED BY
05/30/2025	TJG	JMC

DRAWING TITLE:
SECOND FLOOR PLAN - UNIT C - PLUMBING

CERTIFIED BY:
Joseph Michael Chrapla
REGISTERED
No. PE11700335
STATE OF INDIANA
PROFESSIONAL ENGINEER
05/30/2025

DRAWING NUMBER
P202C

PROJECT NUMBER
2024022

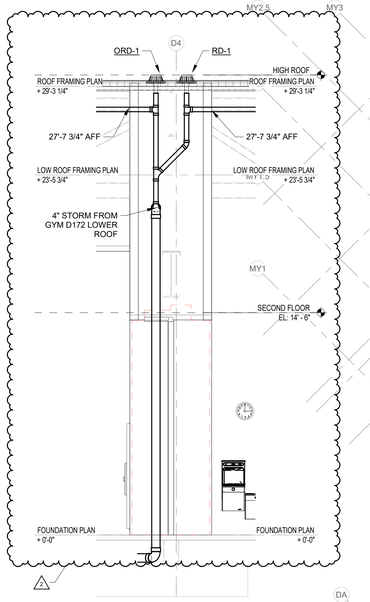

A EAST ROOF CONDUCTOR AT COLUMN LINE D4

SCALE: NONE

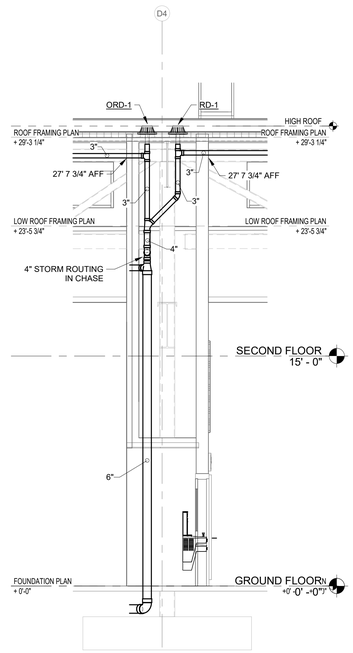

B WEST ROOF CONDUCTOR AT COLUMN LINE D4

SCALE: NONE

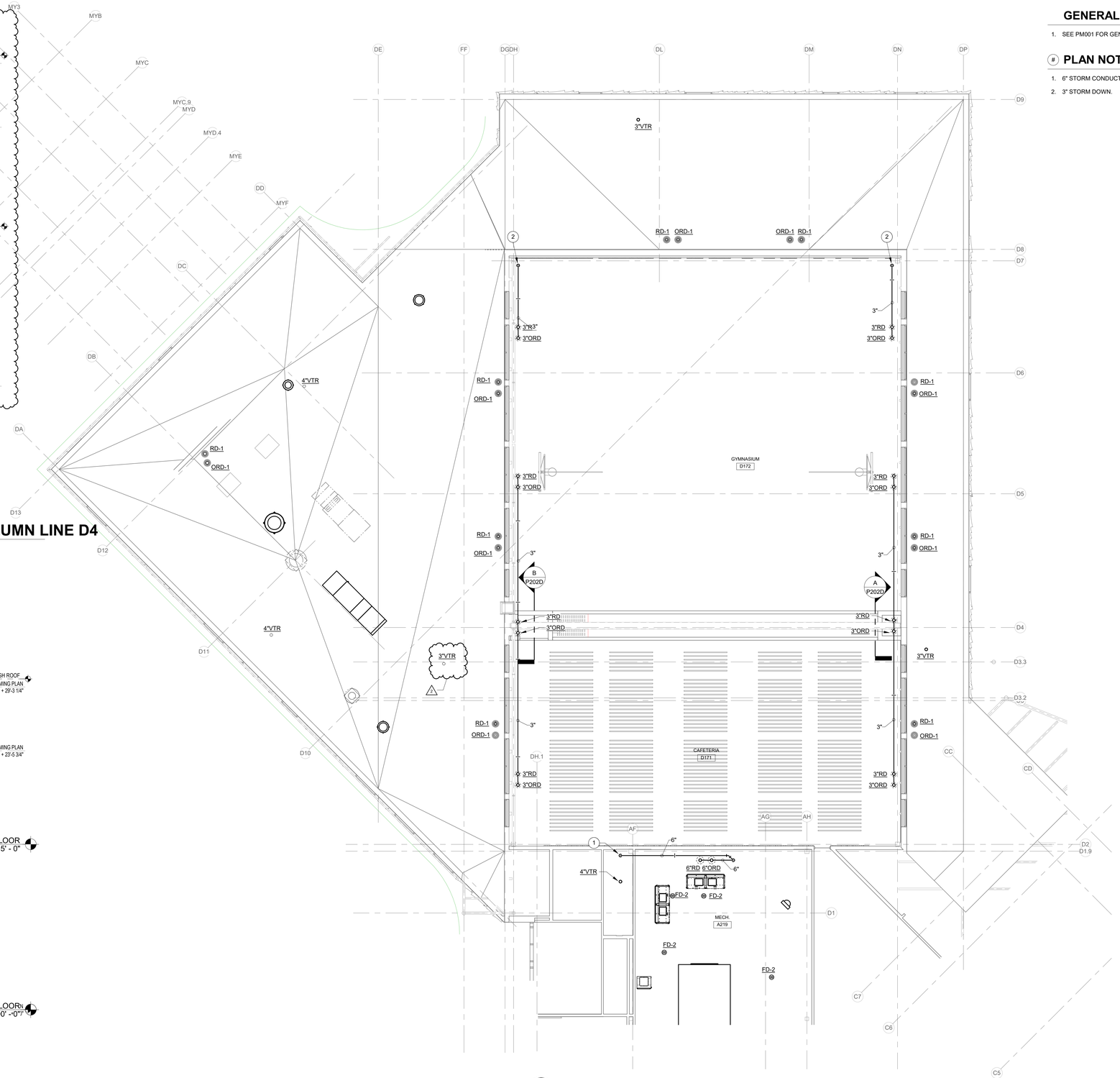

SECOND FLOOR - UNIT D - PLUMBING

SCALE: 1/8" = 1'-0"

NORTH

GENERAL NOTES:

1. SEE PM001 FOR GENERAL NOTES.

PLAN NOTES:

1. 6" STORM CONDUCTOR DOWN.
2. 3" STORM DOWN.

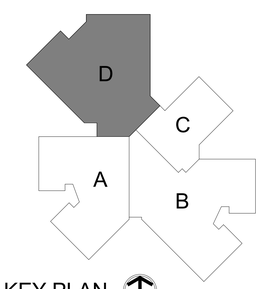

KEY PLAN

NORTH

0 2 4 6 8 16 24 32

1 2 3 4

BCSC TOGETHER WE LEARN

CSO

8831 Keystone Crossing, Indianapolis, IN 46240
317.848.7800 | csoinc.net

© 2018 CSO Architects, Inc. All Rights Reserved

Höweler+Yoon Architecture
617.517.4101 howeleryoon.com

D&A #24063

R.E. Dimond and Associates, Inc.
Consulting Engineers

732 North Capitol Avenue
Indianapolis, IN 46204
Phone: (317) 634-4672
Fax: (317) 638-8725

PROJECT:

BARTHOLOMEW CONSOLIDATED SCHOOL CORPORATION
MAPLE GROVE ELEMENTARY
TIPTON LAKES BLVD, COLUMBUS, IN 47201

SCOPE DRAWINGS:

These drawings indicate the general scope of the project in terms of architectural design concept, the dimensions of the building, the major architectural elements and the type of structural, mechanical and electrical systems.

The drawings do not necessarily indicate or describe all work required for full performance and completion of the requirements of the Contract.

On the basis of the general scope indicated or described, the trade contractors shall furnish all items required for the proper execution and completion of the work.

REVISIONS:

2	Addendum #2	06/17/2025

ISSUE DATE	DRAWN BY	CHECKED BY
05/30/2025	TJG	JMC

DRAWING TITLE:

SECOND FLOOR PLAN - UNIT D - PLUMBING

CERTIFIED BY:

Joseph Michael Chrapla
REGISTERED
No. PE11700335
STATE OF INDIANA
PROFESSIONAL ENGINEER

05/30/2025

DRAWING NUMBER

P202D

PROJECT NUMBER

2024022

GENERAL NOTES:

1. SEE PM001 FOR GENERAL NOTES.
2. COORDINATE ROOF DRAIN LOCATIONS WITH ARCHITECTURAL ROOF PLAN AND STRUCTURAL PLANS.

PLAN NOTES:

1. 1" (2 PSIG) GAS PIPING FROM BELOW.
2. GAS PRESSURE REDUCING VALVE.
3. CONNECT 1" GAS PIPING TO KITCHEN MAKE-UP AIR UNIT.

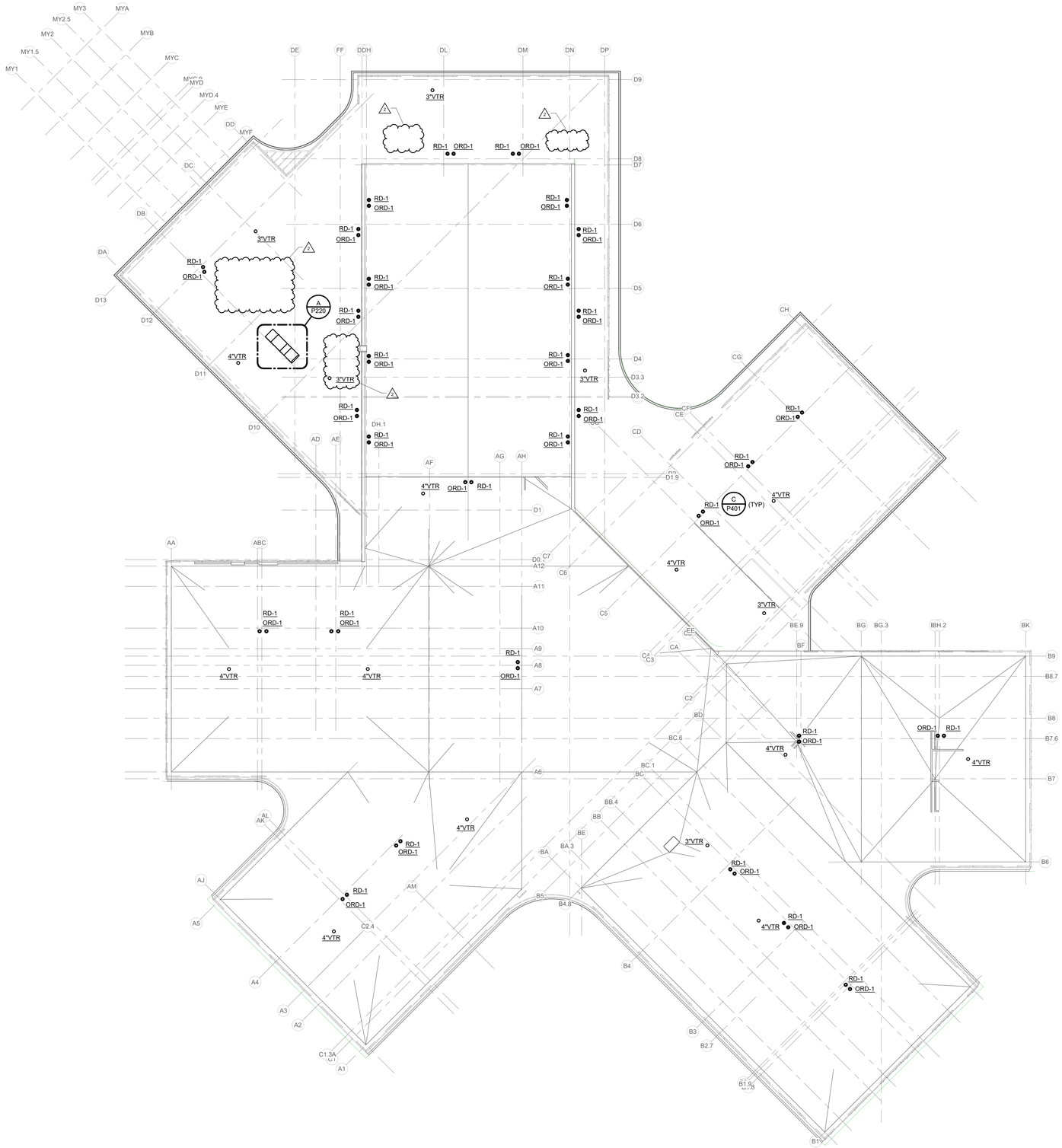

ROOF PLAN - PLUMBING

SCALE: 1/16" = 1'-0"

NORTH

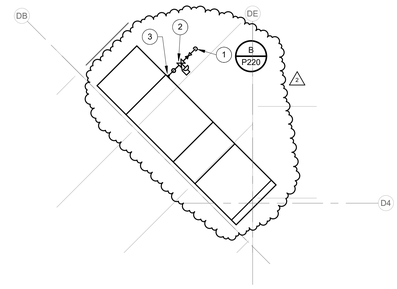

A ENLARGED ROOF PLAN - PLUMBING

SCALE: 1/4" = 1'-0"

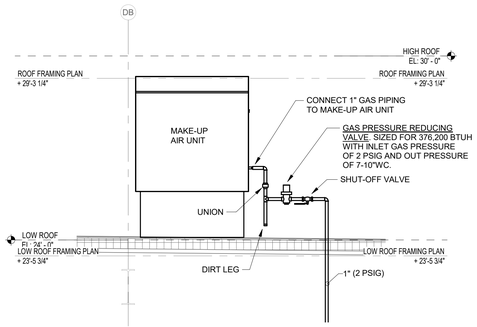

B KITCHEN MAKE-UP AIR GAS PIPING

SCALE: NONE

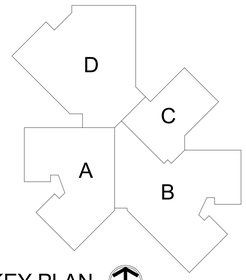

KEY PLAN

NORTH

0 2 4 6 8 16 24 32

1 2 3 4

BCSC
TOGETHER WE LEARN

CSO
8831 Keystone Crossing, Indianapolis, IN 46240
317.848.7800 | csoinc.net

© 2018 CSO Architects, Inc. All Rights Reserved

Höweler+Yoon Architecture
617.517.4101 howeleryoon.com

D&A #24063

R.E. Dimond and Associates, Inc.
Consulting Engineers
732 North Capitol Avenue
Indianapolis, IN 46204
Phone: (317) 634-4672
Fax: (317) 638-8725

PROJECT:
BARTHOLOMEW CONSOLIDATED SCHOOL CORPORATION
MAPLE GROVE ELEMENTARY
TIPTON LAKES BLVD, COLUMBUS, IN 47201

SCOPE DRAWINGS:
These drawings indicate the general scope of the project in terms of architectural design concept, the dimensions of the building, the major architectural elements and the type of structural, mechanical and electrical systems.
The drawings do not necessarily indicate or describe all work required for full performance and completion of the requirements of the Contract.
On the basis of the general scope indicated or described, the trade contractors shall furnish all items required for the proper execution and completion of the work.

REVISIONS:

2	Addendum #2	06/17/2025

ISSUE DATE	DRAWN BY	CHECKED BY
05/30/2025	TJG	JMC

DRAWING TITLE:
ROOF PLAN - PLUMBING

CERTIFIED BY:
Joseph Michael Chrapla
REGISTERED
No. PE11700335
STATE OF INDIANA
PROFESSIONAL ENGINEER
05/30/2025

DRAWING NUMBER
P220

PROJECT NUMBER
2024022

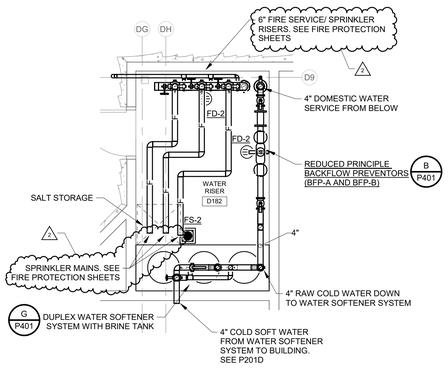

3 ENLARGED WATER RISER D182 - PLUMBING

SCALE: 1/4" = 1'-0"

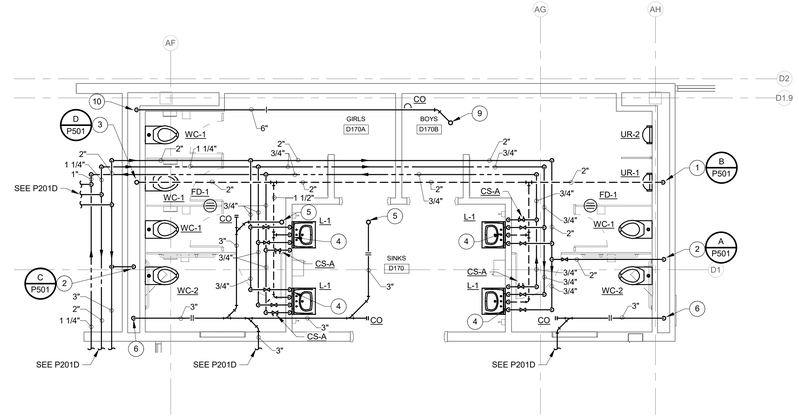

1 GIRLS D170A AND BOYS D170B ENLARGED TOILET ROOM PLAN - PLUMBING

SCALE: 1/4" = 1'-0"

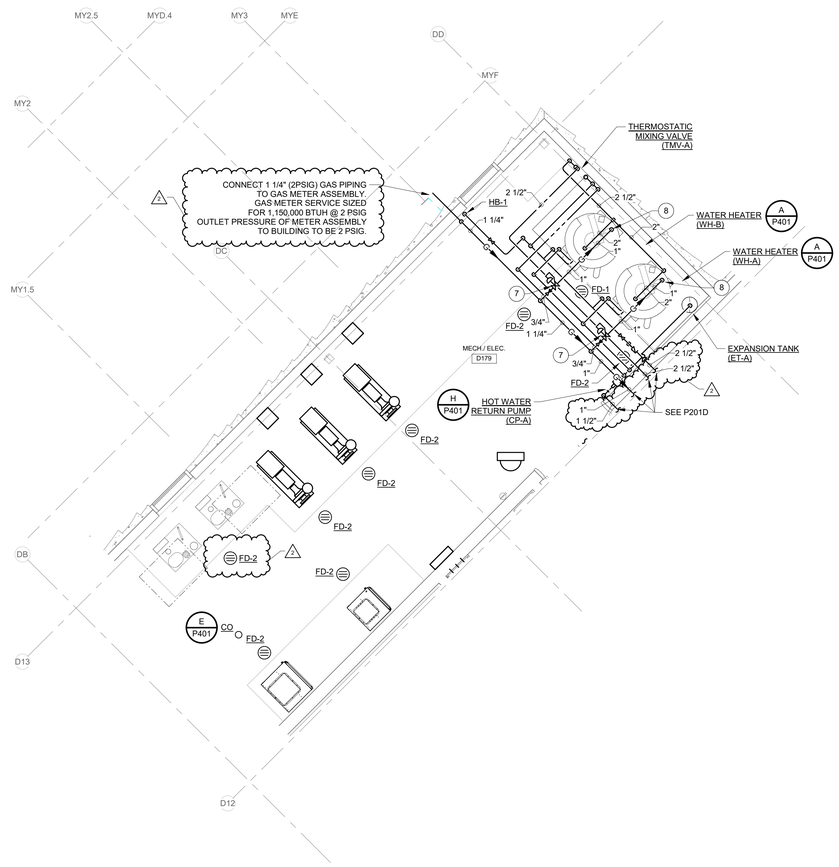

2 ENLARGED MECHANICAL D179 - PLUMBING

SCALE: 1/4" = 1'-0"

GENERAL NOTES:

1. SEE PM001 FOR GENERAL NOTES.

PLAN NOTES:

1. 4" WASTE DOWN. 2" VENT UP.
2. 2" COLD SOFT WATER DOWN.
3. 4" WASTE DOWN. 4" VENT UP. 4" VENT THRU ROOF.
4. 3/4" HOT WATER AND 3/4" COLD WATER DOWN. 3/4" HOT WATER RETURN FROM BELOW. 1 1/2' WASTE DOWN. 1 1/2" VENT UP.
5. 3" FROM FLOOR DRAIN ABOVE.
6. 3" WASTE DOWN.
7. GAS PRESSURE REDUCING VALVE. SIZE VALVE FOR 300,000 BTUH WITH INLET PRESSURE OF 2 PSIG AND OUTLET PRESSURE OF 7-10"WC.
8. CONNECT 1" GAS PIPING TO WATER HEATER.
9. 6" STORM FROM ABOVE.
10. 6" STORM DOWN.

BCSC TOGETHER WE LEARN

CSO
8831 Keystone Crossing, Indianapolis, IN 46240
317.848.7800 | csoinc.net

© 2018 CSO Architects, Inc. All Rights Reserved

Höweler+Yoon Architecture
617.517.4101 howeleryoon.com

D&A #24063

R.E. Dimond and Associates, Inc.
Consulting Engineers
732 North Capitol Avenue
Indianapolis, IN 46204
Phone: (317) 634-4672
Fax: (317) 638-8725

PROJECT:
BARTHOLOMEW CONSOLIDATED SCHOOL CORPORATION
MAPLE GROVE ELEMENTARY
TIPTON LAKES BLVD, COLUMBUS, IN 47201

SCOPE DRAWINGS:
These drawings indicate the general scope of the project in terms of architectural design concept, the dimensions of the building, the major architectural elements and the type of structural, mechanical and electrical systems.
The drawings do not necessarily indicate or describe all work required for the performance and completion of the requirements of the Contract.
On the basis of the general scope indicated or described, the trade contractors shall furnish all items required for the proper execution and completion of the work.

REVISIONS:

2	Addendum #2	06/17/2025

ISSUE DATE	DRAWN BY	CHECKED BY
05/30/2025	TJG	JMC

DRAWING TITLE:
ENLARGED PLANS - PLUMBING

CERTIFIED BY:
Joseph Michael Cherry
REGISTERED
No. PE11700335
STATE OF INDIANA
PROFESSIONAL ENGINEER
06/30/2025

DRAWING NUMBER
P301

PROJECT NUMBER
2024022

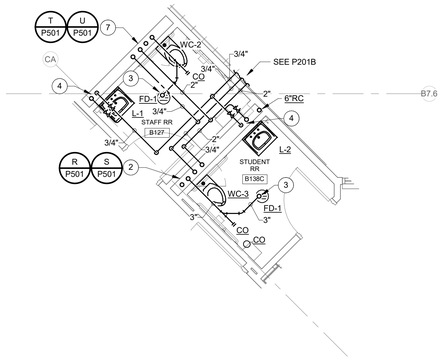

5 STAFF RR B127 AND STUDENT RR B138C PLAN - PLUMBING

SCALE: 1/4" = 1'-0"

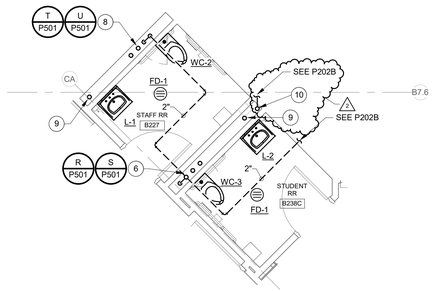

6 STAFF RR B227 AND STUNDENT RR B238C PLAN - PLUMBING

SCALE: 1/4" = 1'-0"

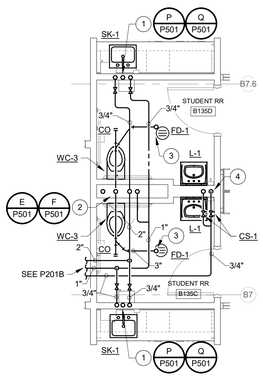

7 STUDENT RR B135C AND B135D PLAN - PLUMBING

SCALE: 1/4" = 1'-0"

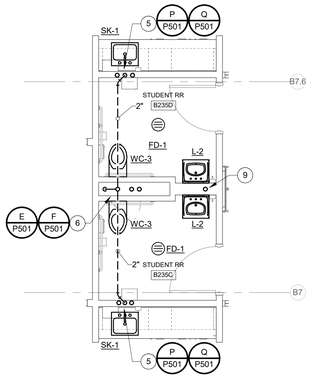

8 STUDENT RR B235C AND B235D PLAN - PLUMBING

SCALE: 1/4" = 1'-0"

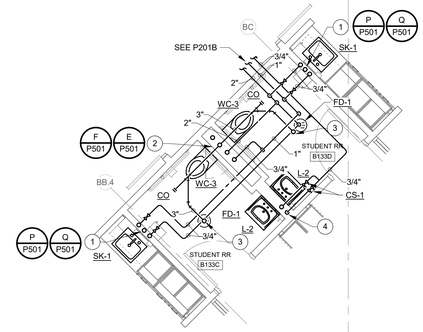

1 STUDENT RR B133C, B133D, PLAN - PLUMBING

SCALE: 1/4" = 1'-0"

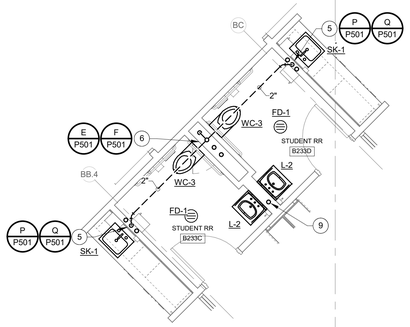

2 STUDENT RR B233C AND B233D PLAN - PLUMBING

SCALE: 1/4" = 1'-0"

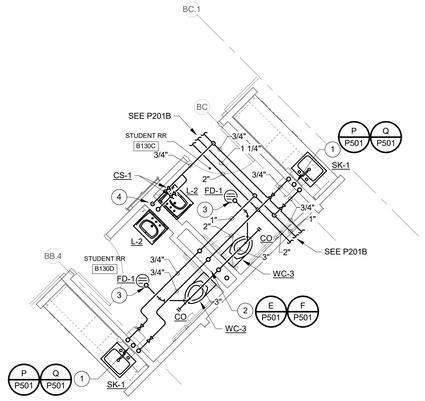

3 STUDENT RR B130C AND 130D PLAN - PLUMBING

SCALE: 1/4" = 1'-0"

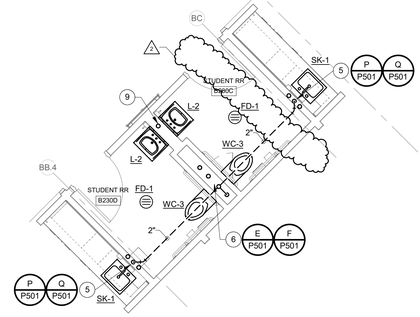

4 STUDENT RR B230C AND B230D PLAN - PLUMBING

SCALE: 1/4" = 1'-0"

GENERAL NOTES:

1. SEE PM001 FOR GENERAL NOTES.

PLAN NOTES:

1. 3/4" HOT WATER AND 3/4" COLD SOFT WATER DOWN. 3/4" HOT WATER AND 3/4" COLD SOFT WATER UP. COMBINATION 2" WASTE VENT STACK.
2. 3/4" HOT WATER AND 1 1/2" COLD SOFT WATER DOWN. 3/4" HOT WATER AND 1 1/2" COLD SOFT WATER UP. 4" WASTE STACK. 4" VENT STACK.
3. 3" FROM FLOOR DRAIN ABOVE..
4. 3/4" HOT WATER RETURN FROM BELOW. 3/4" HOT WATER RETURN FROM ABOVE..
5. 3/4" HOT WATER AND 3/4" COLD SOFT WATER FROM BELOW. COMBINATION 2" WASTE STACK DOWN. 2" VENT UP.
6. 3/4" HOT WATER AND 1 1/2" COLD SOFT WATER FROM BELOW. 4" WASTE STACK DOWN. 4" VENT STACK. 4" VENT UP. 4" VENT THRU ROOF.
7. 3/4" HOT WATER AND 1 1/2" COLD SOFT WATER DOWN. 3/4" HOT WATER AND 1 1/2" COLD SOFT WATER UP. 4" WASTE STACK. 2" VENT STACK.
8. 3/4" HOT WATER AND 1 1/2" COLD SOFT WATER FROM BELOW. 4" WASTE STACK DOWN. 4" VENT STACK. 2" VENT UP.
9. 3/4" HOT WATER RETURN DOWN.
10. 6" FROM ROOF DRAIN ABOVE. 6" STORM DOWN.

BCSC TOGETHER WE LEARN

CSO
8831 Keystone Crossing, Indianapolis, IN 46240
317.848.7800 | csoinc.net

© 2018 CSO Architects, Inc. All Rights Reserved

Höweler+Yoon Architecture
617.517.4101 howeleryoon.com

D&A #24063

R.E. Dimond and Associates, Inc.
Consulting Engineers
732 North Capitol Avenue
Indianapolis, IN 46204
Phone: (317) 634-4672
Fax: (317) 638-8725

PROJECT:
BARTHOLOMEW CONSOLIDATED SCHOOL CORPORATION
MAPLE GROVE ELEMENTARY
TIPTON LAKES BLVD, COLUMBUS, IN 47201

SCOPE DRAWINGS:
These drawings indicate the general scope of the project in terms of architectural design concept, the dimensions of the building, the major architectural elements and the type of structural, mechanical and electrical systems.
The drawings do not necessarily indicate or describe all work required for the performance and completion of the requirements of the Contract.
On the basis of the general scope indicated or described, the trade contractors shall furnish all items required for the proper execution and completion of the work.

REVISIONS:

2	Addendum #2	06/17/2025

ISSUE DATE	DRAWN BY	CHECKED BY
05/30/2025	TJG	JMC

DRAWING TITLE:
ENLARGED TOILET ROOM PLANS - UNIT B - PLUMBING

CERTIFIED BY:
Joseph Michael Cerbus
REGISTERED
No. PE11700335
STATE OF INDIANA
PROFESSIONAL ENGINEER
06/30/2025

DRAWING NUMBER
P303

PROJECT NUMBER
2024022

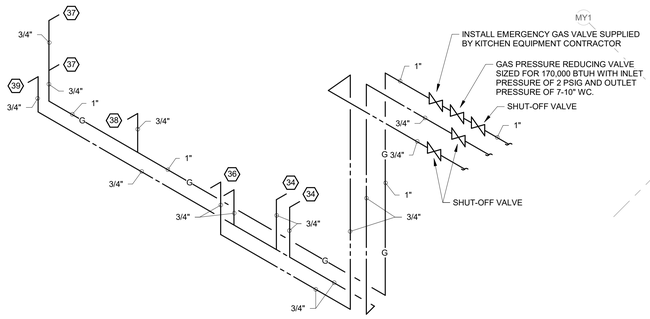

A KITCHEN HOOD UTILITY DIAGRAM

SCALE: NONE

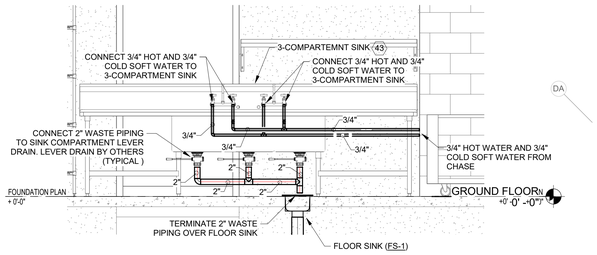

NOTE: 3-COMP SINK PIPING TO BE TYPE "L" COPPER

B 3-COMP SINK PIPING

SCALE: NONE

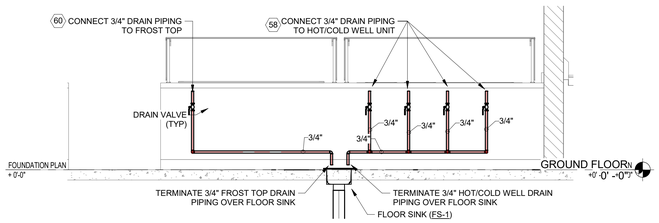

NOTE: HOT/COLD WELL AND FROST TOP DRAIN PIPING TO TYPE "L" COPPER

C HOT WELL AND FROST TOP DRAIN PIPING

SCALE: NONE

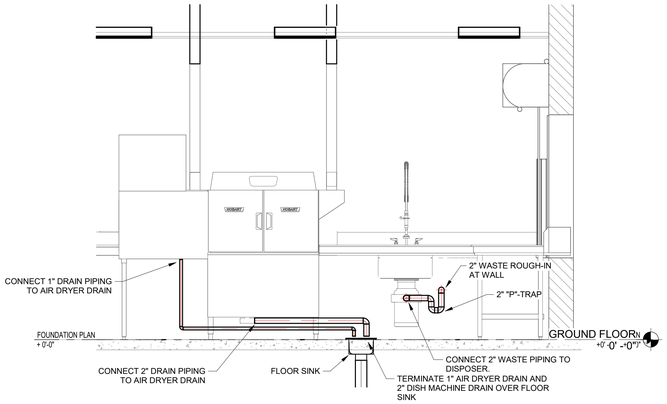

D DISH MACHINE DRAIN PIPING

SCALE: NONE

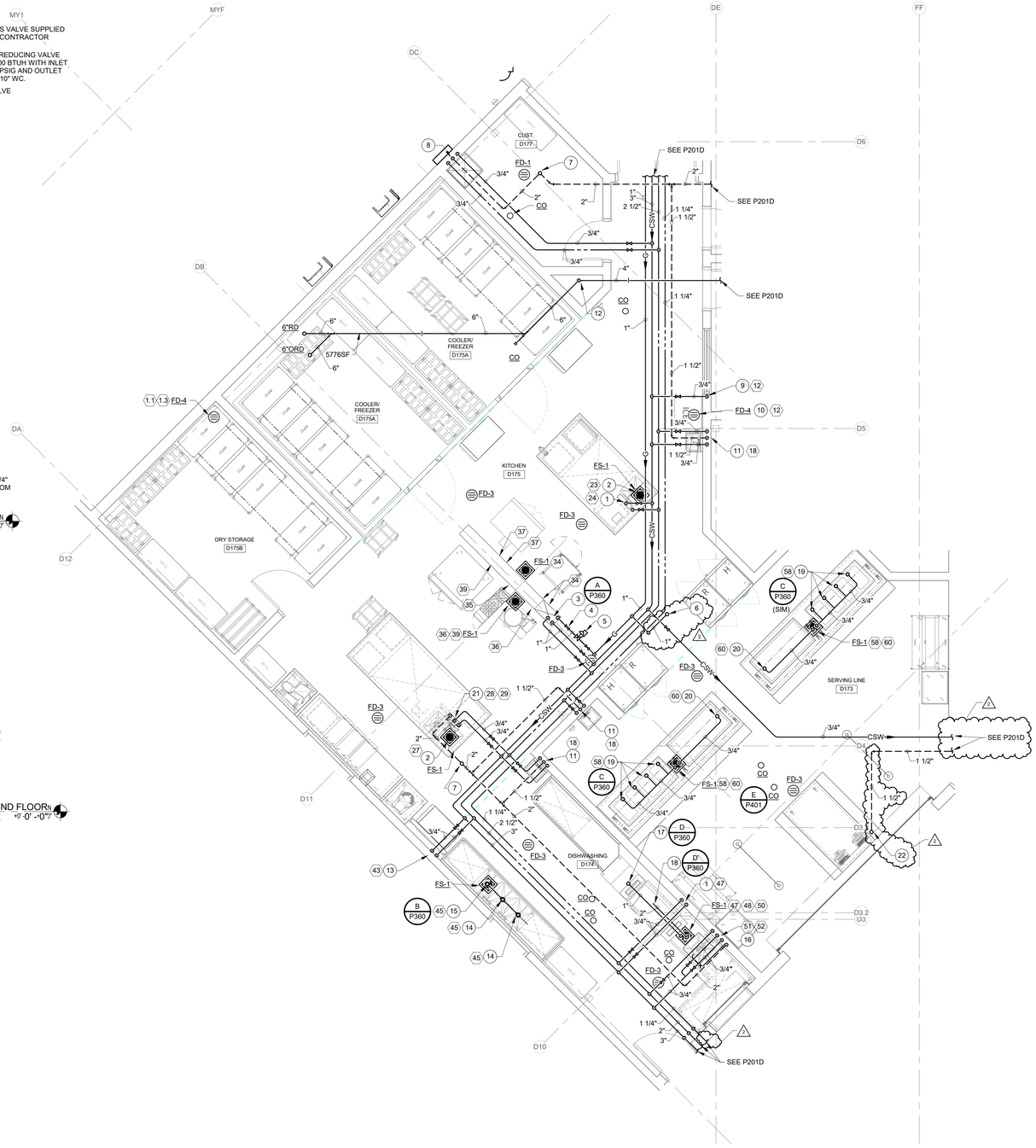

1 ENLARGED KITCHEN PLAN - PLUMBING

SCALE: 1/4" = 1'-0"

GENERAL NOTES:

1. SEE PM001 FOR GENERAL NOTES.

PLAN NOTES:

1. 3/4" HOT WATER AND 3/4" COLD SOFT WATER DOWN.
2. CONNECT 2" DRAIN PIPING TO SINK LEVER DRAIN. TERMINATE 2" DRAIN PIPING OVER FLOOR SINK.
3. 3/4" HOT WATER, 3/4" COLD SOFT WATER, AND 1" (7-10" WC) GAS DOWN. EXTEND HOT WATER, COLD WATER AND GAS PIPING TO KITCHEN EQUIPMENT ROUGH-IN. PROVIDE BALL VALVE AT ROUGH-IN FOR CONNECTION BY KITCHEN EQUIPMENT CONTRACTOR.
4. INSTALL EMERGENCY GAS VALVE SUPPLIED BY KITCHEN EQUIPMENT CONTRACTOR.
5. GAS PRESSURE REDUCING VALVE SIZED FOR 170,000 BTUH WITH INLET GAS PRESSURE OF 2 PSIG AND OUTLET GAS PRESSURE 7-10" WC.
6. 1" (2 PSIG) GAS PIPING UP TO KITCHEN MAKE-UP AIR UNIT ON ROOF.
7. 2" VENT UP. 4" VENT THRU ROOF.
8. 3/4' HOT WATER AND 3/4" COLD SOFT WATER DOWN. 2" VENT FROM BELOW.
9. 3/4" COLD SOFT WATER DOWN.
10. CONNECT 3/4" DRAIN PIPING TO ICE MACHINE/ICE BIN. TERMINATE 3/4" DRAIN PIPING OVER FLOOR DRAIN.
11. 3/4" HOT WATER AND 3/4" COLD SOFT WATER DOWN. 1 1/2" WASTE DOWN. 1 1/2" VENT UP.
12. 8" STORM DOWN.
13. 3/4" HOT WATER AND 3/4" COLD SOFT WATER DOWN. EXTEND 3/4" HOT WATER AND 3/4" COLD SOFT WATER TO 3-COMPARTMENT SINK FAUCETS AND CONNECT.
14. CONNECT 2" WASTE PIPING TO SINK LEVER DRAIN.
15. CONNECT 2" WASTE PIPING TO SINK LEVER DRAIN. TERMINATE 2" WASTE PIPING OVER FLOOR SINK.
16. 3/4" HOT WATER AND (2) 3/4" COLD SOFT WATER DOWN. 2" WASTE DOWN. 2" VENT UP.
17. CONNECT 1" DRAIN LINE TO AIR DRYER. TERMINATE 1" DRAIN PIPING OVER FLOOR SINK.
18. CONNECT 2" DRAIN PIPE TO DISH MACHINE. TERMINATE 2" DRAIN PIPING OVER FLOOR SINK.
19. CONNECT 3/4" DRAIN PIPING TO HOT WELL DRAIN. TERMINATE 3/4" DRAIN PIPING OVER FLOOR SINK.
20. CONNECT 3/4" DRAIN PIPING TO FROST TOP DRAIN. TERMINATE 3/4" DRAIN PIPING OVER FLOOR SINK.
21. 3/4" HOT WATER AND 3/4" COLD SOFT WATER DOWN. 2" WASTE DOWN. 2" VENT UP.
22. 1 1/2" VENT UP. 3" VENT THRU ROOF.

BCSC TOGETHER WE LEARN

CSO
8831 Keystone Crossing, Indianapolis, IN 46240
317.848.7800 | csoinc.net

© 2018 CSO Architects, Inc. All Rights Reserved

Howeler+Yoon Architecture
617.517.4101 howeleryoon.com

D&A #24063
R.E. Dimond and Associates, Inc.
Consulting Engineers
732 North Capitol Avenue
Indianapolis, IN 46204
Phone: (317) 634-4672
Fax: (317) 638-8725

PROJECT:
BARTHOLOMEW CONSOLIDATED SCHOOL CORPORATION
MAPLE GROVE ELEMENTARY
TIPTON LAKES BLVD, COLUMBUS, IN 47201

SCOPE DRAWINGS:
These drawings indicate the general scope of the project in terms of architectural design concept, the dimensions of the building, the general construction required and the type of structural, mechanical and electrical systems.
The drawings do not necessarily indicate or describe all work required for full performance and completion of the requirements of the Contract.
In addition to the general scope indicated or described, the trade contractors shall furnish all items required for the proper execution and completion of the work.

REVISIONS:

2	Addendum #2	06/17/2025

ISSUE DATE	DRAWN BY	CHECKED BY
05/30/2025	TJG	JMC

DRAWING TITLE:
ENLARGED KITCHEN PLAN - PLUMBING

CERTIFIED BY:
Joseph Michael Chrisp REGISTERED No. PE11700335 STATE OF INDIANA PROFESSIONAL ENGINEER
05/30/2025

DRAWING NUMBER
P360

PROJECT NUMBER
2024022

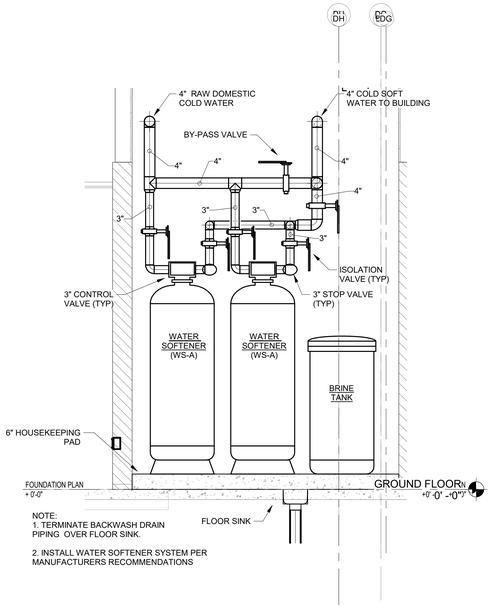

G WATER SOFTENER PIPING

SCALE: NONE

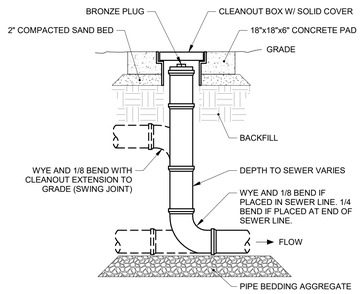

D EXTERIOR CLEANOUT

SCALE: NONE

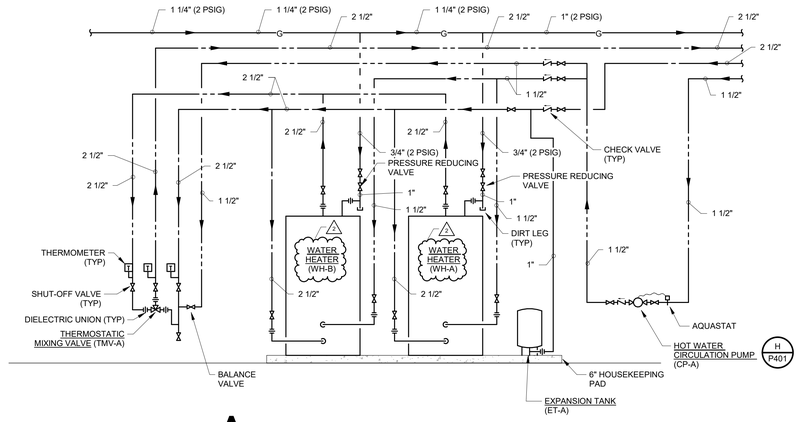

A WATER HEATER PIPING

SCALE: NONE

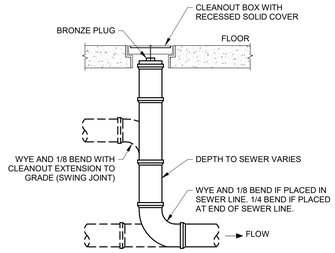

E INTERIOR CLEANOUT

SCALE: NONE

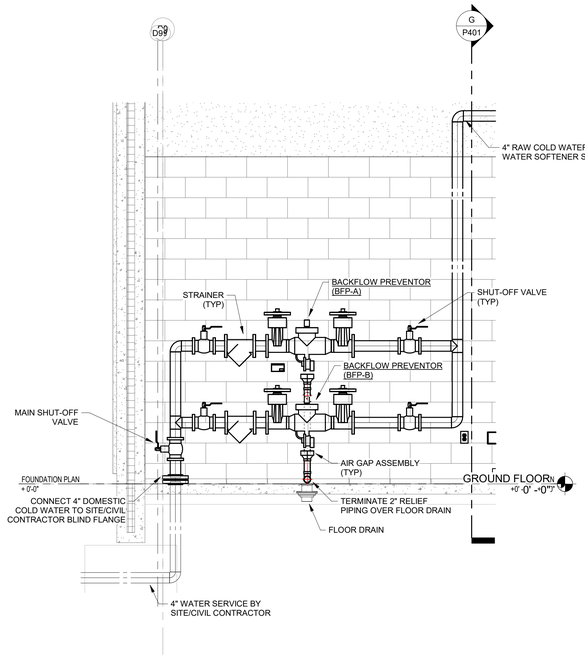

B DOMESTIC WATER SERVICE

SCALE: NONE

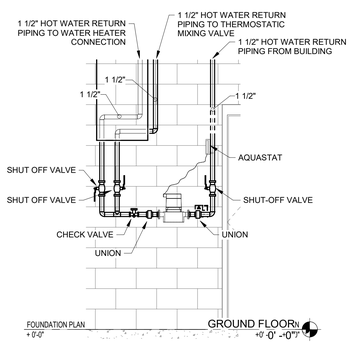

H CIRCULATION PUMP

SCALE: NONE

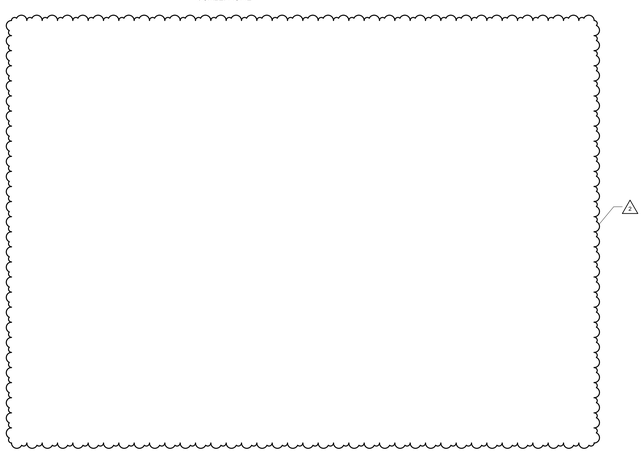

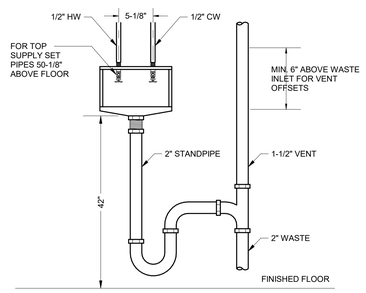

F WASHER BOX DETAIL

SCALE: NONE

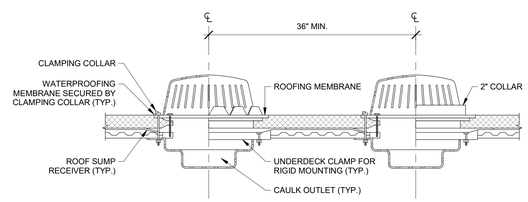

C ROOF DRAIN DETAIL

SCALE: NONE

BCSC TOGETHER WE LEARN

CSO
8831 Keystone Crossing, Indianapolis, IN 46240
317.848.7800 | csoinc.net

© 2018 CSO Architects, Inc. All Rights Reserved

Höweler+Yoon Architecture
617.517.4101 howeleryoon.com

D&A #24063

R.E. Dimond and Associates, Inc.
Consulting Engineers
732 North Capitol Avenue
Indianapolis, IN 46204
Phone: (317) 634-4672
Fax: (317) 638-8725

PROJECT:
BARTHOLOMEW CONSOLIDATED SCHOOL CORPORATION
MAPLE GROVE ELEMENTARY
TIPTON LAKES BLVD, COLUMBUS, IN 47201

SCOPE DRAWINGS:
These drawings indicate the general scope of the project in terms of architectural design concept, the dimensions of the building, the major architectural elements and the type of construction and mechanical and electrical systems.
The drawings do not necessarily indicate or describe all work required for full performance and completion of the requirements of the Contract.
Provide the basic of the general scope indicated or described, the trades involved and the general remain an items required for the proper execution and completion of the work.

REVISIONS:

2	Addendum #2	06/17/2025

ISSUE DATE	DRAWN BY	CHECKED BY
05/30/2025	TJG	JMC

DRAWING TITLE:
DETAILS - PLUMBING

CERTIFIED BY:
Joseph Michael Chaney
REGISTERED
No. PE11700335
STATE OF INDIANA
PROFESSIONAL ENGINEER
05/30/2025

DRAWING NUMBER
P401

PROJECT NUMBER
2024022

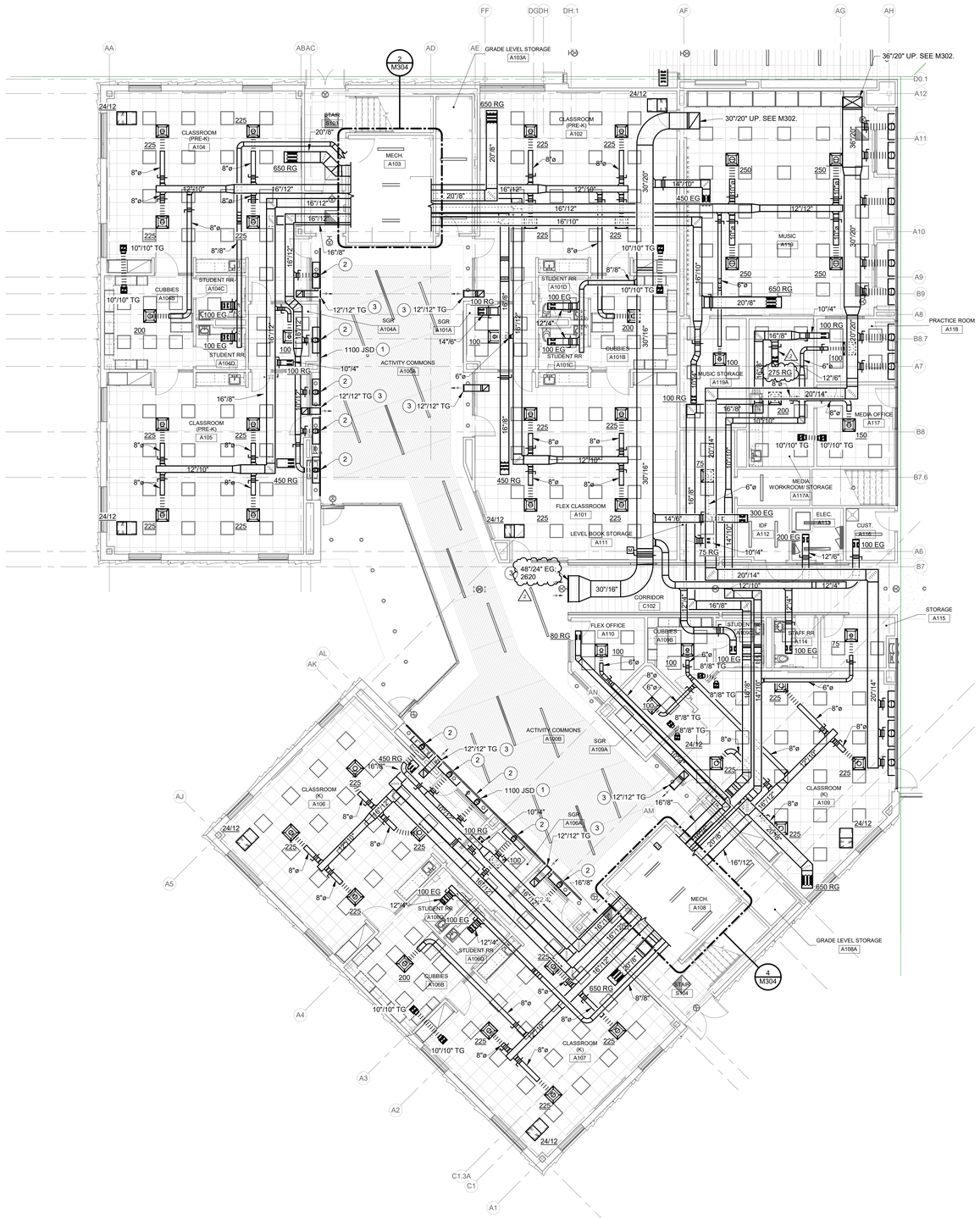

FIRST FLOOR - UNIT A - AIR DISTRIBUTION

SCALE: 1/8" = 1'-0"

NORTH

GENERAL NOTES - AIR DISTRIBUTION:

1. FLEX DUCT CONNECTIONS TO DIFFUSERS SHALL BE A MAXIMUM OF 3'-0" IN LENGTH.
2. BRANCH DUCTS SHALL HAVE 45° BOOT TAP FROM SIDE OF MAIN. NO SPIN-IN FITTING ALLOWED. SEE DETAIL 'A' / M401.
3. PROVIDE VOLUME DAMPERS IN ALL BRANCH DUCTS TO DIFFUSERS, EXHAUST GRILLES, ETC. WHETHER SHOWN OR NOT. THESE DAMPERS ARE TO BE USED FOR SYSTEM BALANCE. DAMPERS IN DIFFUSERS, REGISTERS, ETC. SHALL NOT BE USED FOR AIR BALANCE.
4. ALL VOLUME DAMPERS SHALL BE LOCATED ABOVE ACCESSIBLE CEILINGS. IF POSSIBLE. IF NOT POSSIBLE, AND VOLUME DAMPER IS INSTALLED ABOVE A HARD CEILING OR IN AN INACCESSIBLE LOCATION, THEN PROVIDE ACCESS PANEL IN CEILING OR INSTALL A REMOTE DAMPER ACTUATOR. REMOTE DAMPER ACTUATOR LIKE YOUNG REGULATOR CO. 1200 WORM GEAR WITH FLEX SHAFT ASSEMBLY AND 7/8" 896-FS CEILING TERMINATION OR YOUNG EBD ELECTRONIC BALANCING DAMPER WITH EBDP ELECTRONIC BALANCING DAMPER POSITIONER AND VISUAL INDICATION OF DAMPER POSITION OR APPROVED EQUAL. PROVIDE DRAWING SHOWING WHICH INTERFACE OPERATES WHICH DAMPER.
5. SEE REFLECTED CEILING PLAN FOR EXACT LOCATION OF AIR OUTLETS.
6. COORDINATE AND ADJUST DIFFUSER LOCATIONS, AS NEEDED.
7. SEE M601 FOR CEILING DIFFUSER/EXHAUST AND RETURN REGISTER SCHEDULE.
8. FOR FIRE DAMPER INSTALLATION SEE DETAIL 'E' / M401.
9. ALL TRANSFER OPENINGS TO BE ABOVE CEILINGS.
10. ALL RETURN GRILLES TO HAVE ACOUSTICAL ELBOW. SEE PLENUM RETURN GRILLE SCHEDULE, M601 - SCHEDULES - AIR DISTRIBUTION.
11. SUPPLY DIFFUSERS TO BE INSTALLED NO CLOSER THAN 4'-0" TO ALL SMOKE DETECTORS. REFER TO T-SERIES AND E-SERIES DRAWINGS FOR ADDITIONAL CEILING INSTALLED DEVICES. COORDINATE AND ADJUST DIFFUSER LOCATIONS, AS NEEDED.
12. SHEET METAL CONTRACTOR TO PROVIDE DUCT ACCESS DOORS FOR FIRE DAMPERS, MOTORIZED DAMPERS, AIR FLOW MEASURING STATIONS, AND ON BOTH SIDES OF THE REHEAT COILS. COORDINATE WITH MECHANICAL CONTRACTOR AND GENERAL TRADES CONTRACTOR.
13. MECHANICAL CONTRACTOR SHALL BLANK-OFF UNUSED PORTIONS OF ALL LOUVERS WHETHER SHOWN OR NOT WITH SHEET METAL AND 2" OF RIGID INSULATION PAINTED BLACK.
14. EACH AND EVERY EXHAUST FAN TO HAVE INSULATED, TIGHT-CLOSING ISOLATION DAMPER WHETHER SHOWN OR NOT.
15. EXTERNALLY INSULATE ALL SUPPLY DUCTWORK CONCEALED ABOVE CEILINGS WITH FLEXIBLE FIBERGLASS. EXPOSED SUPPLY DUCTWORK TO BE DUAL WALL INSULATED ROUND DUCTWORK WITH PAINT GRIP FINISH. EXPOSED RECTANGULAR SUPPLY DUCTWORK TO BE INSULATED WITH 1 1/2", 3 LBS/FT^3 RIGID FIBERGLASS BOARD AND ALL-SERVICE JACKET (ASJ) FOR PAINTED FINISH. ALL EXPOSED DUCTWORK TO BE INSTALLED NEATLY TO THE SATISFACTION OF THE ENGINEER.
16. THESE ARE NOT FABRICATION DRAWINGS. THESE DRAWINGS ARE NOT INTENDED TO SHOWN ALL OFFSETS AS REQUIRED FOR PROPER DUCTWORK INSTALLATION. CONTRACTOR TO FIELD VERIFY ALL EXISTING CONDITIONS AND PREPARE FABRICATION DRAWINGS BASED ON EXISTING CONDITIONS. ALL ADDITIONAL OFFSETS SHALL BE INCLUDED IN BID PRICE.
17. VERIFY FIT OF DUCTWORK PRIOR TO ANY FABRICATION. CONTRACTOR WILL NOT BE REIMBURSED FOR DUCTWORK THAT WILL NOT FIT.
18. REFERENCE M400 SERIES DRAWINGS FOR TYPICAL AND SPECIFIC INSTALLATION REQUIREMENTS FOR EQUIPMENT, ETC.
19. WORKMANSHIP FOR ALL DUCTWORK AND EQUIPMENT MUST BE IN COMPLIANCE WITH SMACNA STANDARDS.
20. INSTALL DUCTS ACCORDING TO SMACNA'S "HVAC DUCT CONSTRUCTION - METAL AND FLEXIBLE" UNLESS OTHERWISE INDICATED.
21. SEAL DUCT SEAMS AND JOINTS FOR DUCT STATIC PRESSURE AND LEAKAGE CLASSES SPECIFIED IN "PERFORMANCE REQUIREMENTS" ARTICLE, ACCORDING TO SMACNA'S "HVAC DUCT CONSTRUCTION STANDARDS - METAL AND FLEXIBLE", TABLE 1-1, "STANDARD DUCT SEALING REQUIREMENTS", UNLESS OTHERWISE INDICATED.
22. VAV BOXES AND ALL EQUIPMENT, VALVES, CONTROLLERS, ETC., REQUIRING SERVICE ABOVE CEILINGS SHALL BE INSTALLED NO HIGHER THAN 18" ABOVE CEILING UNLESS APPROVED BY ENGINEER.
23. SEE ALSO PM001 FOR ADDITIONAL GENERAL NOTES.

GENERAL NOTES - CONTROLS:

1. SEE "HYDRONICS" DRAWINGS FOR THERMOSTAT LOCATIONS.
2. SEE "HYDRONICS" DRAWINGS FOR ADDITIONAL GENERAL NOTES.
3. SEE ALSO M701 FOR ADDITIONAL "CONTROLS" GENERAL NOTES.

PLAN NOTES:

1. 38'-0" LONG JET SLOT DIFFUSER WITH 1 1/2" SLOT, CONCEALED MUD FRAME WITH COUNTERSUNK HOLES, FLUSH ENDS AND METAL BLANK-OFFS BETWEEN ACTIVE DIFFUSER SECTIONS. LIKE PRICE MODEL CF JET SLOT. ACTIVE PLENUM SECTIONS TO PROVIDE 1,100 CFM. JET SLOT DIFFUSER TO BE MOUNTED AT 10'-4" TO CENTERLINE.
2. 48" CUSTOM FLOW PLENUM WITH 8"ø INLET. PLENUM TO BE WIDTH OF JET SLOT DIFFUSER AND BE PROVIDED BY JET SLOT DIFFUSER MANUFACTURER. EACH PLENUM SECTION TO PROVIDE APPROXIMATELY 220 CFM.
3. GRILLES TO BE PRIME COAT FINISHED FOR FIELD PAINTING.

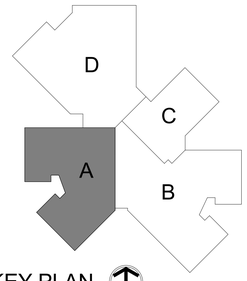

KEY PLAN

NORTH

BCSC TOGETHER WE LEARN

CSO
8831 Keystone Crossing, Indianapolis, IN 46240
317.848.7800 | csoinc.net

© 2018 CSO Architects, Inc. All Rights Reserved

Höweler+Yoon Architecture
617.517.4101 howeleryoon.com

D&A #24063
R.E. Dimond and Associates, Inc.
Consulting Engineers
732 North Capitol Avenue
Indianapolis, IN 46204
Phone: (317) 634-4672
Fax: (317) 638-8725

PROJECT:
BARTHOLOMEW CONSOLIDATED SCHOOL CORPORATION
MAPLE GROVE ELEMENTARY
TIPTON LAKES BLVD, COLUMBUS, IN 47201

SCOPE DRAWINGS:
These drawings indicate the general scope of the project. They do not necessarily indicate or describe all work required for the building, the major architectural elements and the type of structural, mechanical and electrical systems.
The drawings do not necessarily indicate or describe all work required for full performance and completion of the building and site work.
On the basis of the general scope indicated or described, the trade contractors shall furnish all items required for the proper execution and completion of the work.

REVISIONS:

1	Addendum #1	06/10/2025
2	Addendum #2	06/17/2025

ISSUE DATE	DRAWN BY	CHECKED BY
05/30/2025	EJV	JMC

DRAWING TITLE:
FIRST FLOOR PLAN - UNIT A - AIR DISTRIBUTION

CERTIFIED BY:
Joseph Michael Chupurdia
REGISTERED
No. PE11700335
STATE OF INDIANA
PROFESSIONAL ENGINEER
06/30/2025

DRAWING NUMBER
M201A

PROJECT NUMBER
2024022

GENERAL NOTES - AIR DISTRIBUTION:

1. SEE M201A FOR GENERAL NOTES.

PLAN NOTES:

1. 38'-0" LONG JET SLOT DIFFUSER WITH 1 1/2" SLOT, CONCEALED MUD FRAME WITH COUNTERSUNK HOLES, FLUSH ENDS AND METAL BLANK-OFFS BETWEEN ACTIVE DIFFUSER SECTIONS. LIKE PRICE MODEL CF JET SLOT. ACTIVE PLENUM SECTIONS TO PROVIDE 1,100 CFM. JET SLOT DIFFUSER TO BE MOUNTED AT 10'-4" TO CENTERLINE.
2. 48" CUSTOM FLOW PLENUM WITH 8"ø INLET. PLENUM TO BE WIDTH OF JET SLOT DIFFUSER AND BE PROVIDED BY JET SLOT DIFFUSER MANUFACTURER. EACH PLENUM SECTION TO PROVIDE APPROXIMATELY 220 CFM.
3. GRILLES TO BE PRIME COAT FINISHED FOR FIELD PAINTING.

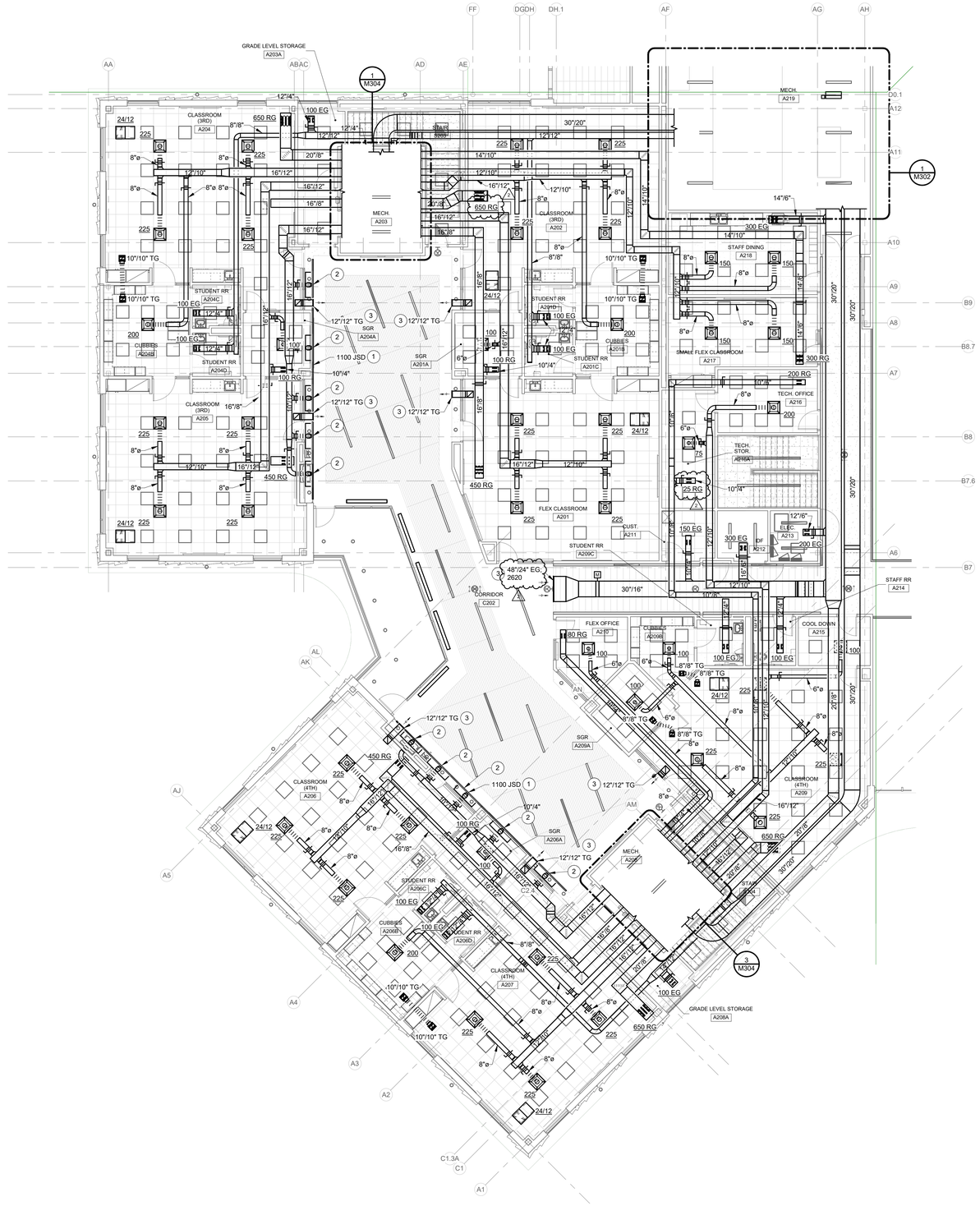

SECOND FLOOR - UNIT A - AIR DISTRIBUTION

SCALE: 1/8" = 1'-0"

NORTH

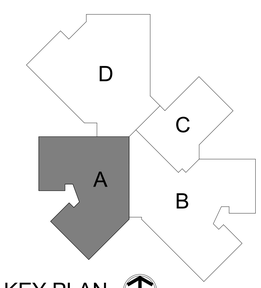

KEY PLAN

NORTH

BCSC TOGETHER WE LEARN

CSO
8831 Keystone Crossing, Indianapolis, IN 46240
317.848.7800 | csoinc.net

© 2018 CSO Architects, Inc. All Rights Reserved

Höweler+Yoon Architecture
617.517.4101 howeleryoon.com

D&A #24063

R.E. Dimond and Associates, Inc.
Consulting Engineers
732 North Capitol Avenue
Indianapolis, IN 46204
Phone: (317) 634-4672
Fax: (317) 638-8725

PROJECT:
BARTHOLOMEW CONSOLIDATED SCHOOL CORPORATION
MAPLE GROVE ELEMENTARY
TIPTON LAKES BLVD, COLUMBUS, IN 47201

SCOPE DRAWINGS:
These drawings indicate the general scope of the project in terms of architectural design concept, the dimensions of the building, the major architectural elements and the type of structural, mechanical and electrical systems.
The drawings do not necessarily indicate or describe all work required for full performance and completion of the requirements of the Contract.
On the basis of the general scope indicated or described, the trade contractors shall furnish all items required for the proper execution and completion of the work.

REVISIONS:

1	Addendum #1	06/10/2025
2	Addendum #2	06/17/2025

ISSUE DATE	DRAWN BY	CHECKED BY
05/30/2025	EJV	JMC

DRAWING TITLE:
SECOND FLOOR PLAN - UNIT A - AIR DISTRIBUTION

CERTIFIED BY:
Joseph Michael Chrapla
REGISTERED
No. PE11700335
STATE OF INDIANA
PROFESSIONAL ENGINEER
05/30/2025

DRAWING NUMBER
M202A

PROJECT NUMBER
2024022

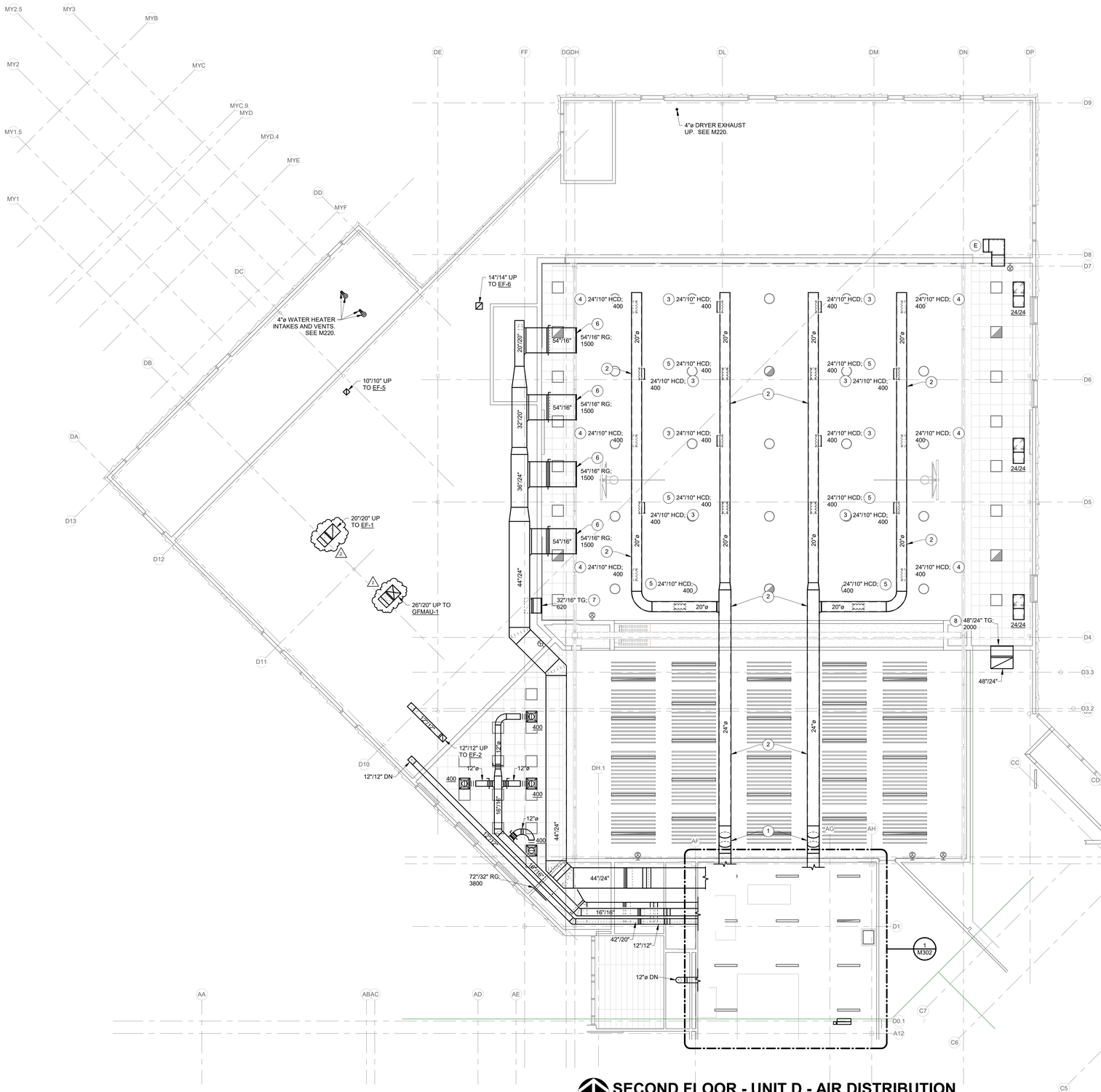

SECOND FLOOR - UNIT D - AIR DISTRIBUTION

SCALE: 1/8" = 1'-0"

NORTH

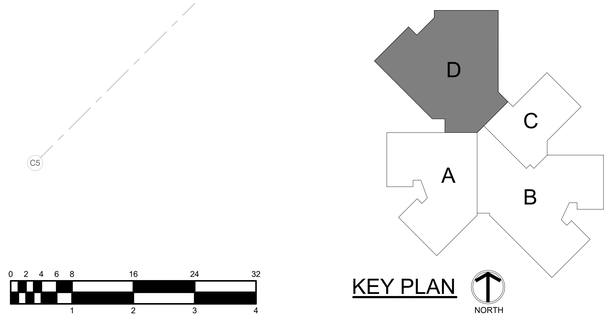

KEY PLAN

NORTH

GENERAL NOTES - AIR DISTRIBUTION:

1. ALL SUPPPLY DIFFUSERS IN GYMNASIUM SHALL BE HIGH CAPACITY DRUM (HCD) LOUVERS. LIKE PRICE MODEL HCD2 WITH SPLIT VANE, STEEL, SPIRAL DUCT FRAME AND HEAVY DUTY OPPOSED BLADE DAMPER. CUSTOM COLOR TO BE SELECTED BY ARCHITECT. CONFIRM SPIRAL DUCT FRAME SIZES WITH DUAL WALL ROUND DUCTOWRK OUTER DIAMETER DIMENSIONS.
2. SEE ALSO M201A FOR ADDITIONAL GENERAL NOTES.

PLAN NOTES:

1. OFFSET DUCTWORK UP INTO ROOF JOIST WEBBING.
2. ROUTE DUAL WALL ROUND DUCTWORK THRU JOIST WEBBING. COORDINATE PATHWAY WITH ROOF JOIST MANUFACTURER. SEE STRUCTURAL DRAWINGS.
3. HIGH CAPACITY DRUM (HCD) LOUVER TO BE INSTALLED 30" DOWN FROM HORIZONTAL.
4. HIGH CAPACITY DRUM (HCD) LOUVER TO BE INSTALLED 60" DOWN FROM HORIZONTAL.
5. HIGH CAPACITY DRUM (HCD) LOUVER TO BE INSTALLED 90" DOWN FROM HORIZONTAL.
6. GRILLES TO BE PRIME COAT FINISHED FOR FIELD PAINTING.
7. 32"/16" TRANSFER GRILLE. GRILLE TO BE MOUNTED ABOVE ACOUTICAL PANELS AT APPROX. 17'-0" TO CENTERLINE OF GRILLE. PROVIDE DUCTED ELBOW TURNED UP TOWARD ROOF DECK. ELBOW TO BE OFF SUFFICIENT LENGTH TO MINIMIZE LINE OF SIGHT THRU GRILLE. GRILLE TO BE PRIME COAT FINISHED FOR FIELD PAINTING.
8. 48"/24" TRANSFER GRILLE. GRILLE TO BE MOUNTED AT APPROX. 16'-0" TO CENTERLINE OF GRILLE. PROVIDE DUCTED ELBOW TURNED UP TOWARD ROOF DECK. ELBOW TO BE OFF SUFFICIENT LENGTH TO MINIMIZE LINE OF SIGHT THRU GRILLE. GRILLE TO BE PRIME COAT FINISHED FOR FIELD PAINTING.

BCSC TOGETHER WE LEARN

CSO
8831 Keystone Crossing, Indianapolis, IN 46240
317.848.7800 | csoinc.net

© 2018 CSO Architects, Inc. All Rights Reserved

Höweler+Yoon Architecture
617.517.4101 howeleryoon.com

D&A #24063

R.E. Dimond and Associates, Inc.
Consulting Engineers
732 North Capitol Avenue
Indianapolis, IN 46204
Phone: (317) 634-4672
Fax: (317) 638-8725

PROJECT:
BARTHOLOMEW CONSOLIDATED SCHOOL CORPORATION
MAPLE GROVE ELEMENTARY
TIPTON LAKES BLVD, COLUMBUS, IN 47201

SCOPE DRAWINGS:
These drawings indicate the general scope of the project in terms of architectural design concept, the dimensions of the building, the major architectural elements and the type of structural, mechanical and electrical systems.
The drawings do not necessarily indicate or describe all work required for full performance and completion of the requirements of the Contract.
On the basis of the general scope indicated or described, the trade contractors shall furnish all items required for the proper execution and completion of the work.

REVISIONS:

1	Addendum #1	06/10/2025
2	Addendum #2	06/17/2025

ISSUE DATE	DRAWN BY	CHECKED BY
05/30/2025	EJV	JMC

DRAWING TITLE:
SECOND FLOOR PLAN - UNIT D - AIR DISTRIBUTION

CERTIFIED BY:
Joseph Michael Chrapla
REGISTERED
No. PE11700335
STATE OF INDIANA
PROFESSIONAL ENGINEER
05/30/2025

DRAWING NUMBER
M202D

PROJECT NUMBER
2024022

GENERAL NOTES - HYDRONICS:

1. ALL BRANCH PIPING TO EQUIPMENT TO BE 3/4" UNLESS NOTED OTHERWISE.
2. NO PIPE SHALL BE SMALLER THAN 3/4" UNLESS SPECIFICALLY NOTED OTHERWISE.
3. ALL FLOOR PENETRATIONS TO BE FIRE STOPPED.
4. PROVIDE AIR VENTS WHEREVER REQUIRED TO REMOVE AIR FROM SYSTEM AND WHERE SHOWN ON DRAWINGS. SEE DETAILS 'D', 'E' & 'F' / M411.
5. ROUTE BRANCH GS & GR PIPING TO EQUIPMENT WITH COILS.
6. CONTRACTOR SHALL BE RESPONSIBLE FOR TESTING, FLUSHING AND FILLING OF PIPING AND SYSTEMS AS REQUIRED.
7. CONTRACTOR SHALL BE RESPONSIBLE FOR CHEMICAL TREATMENT OF SYSTEMS.
8. ALL CONDENSATE DRAINS SHALL TERMINATE WITH 90° ELBOW DIRECTLY OVER DRAIN. ENSURE DRAIN DOES NOT SPLASH ONTO SURROUNDING FLOOR AREA.
9. ALL VALVES MUST BE ACCESSIBLE. PROVIDE ACCESS PANEL FOR ACCESS TO VALVES LOCATED ABOVE HARD CEILINGS.
10. NO PULLED TEE'S ALLOWED. USE MANUFACTURED TEE'S ONLY.
11. CONTRACTOR SHALL PROVIDE ALL REQUIRED GAS VENT PIPING WHETHER SHOWN OR NOT.
12. ALL VENT LINES SHALL TERMINATE OUTSIDE OF BUILDING AT 24" ABOVE PARAPET WITH MUSHROOM CAP AND INSECT SCREEN.
13. GAS VENT PIPING SHALL BE BLACK STEEL.
14. COORDINATE COIL CONNECTIONS FOR ALL EQUIPMENT WITH MANUFACTURER PRIOR TO ORDERING.
15. REFERENCE M410 SERIES DRAWINGS FOR TYPICAL AND SPECIFIC INSTALLATION REQUIREMENTS FOR EQUIPMENT, ETC.
16. SEE ALSO PM001 FOR ADDITIONAL GENERAL NOTES.

GENERAL NOTES - CONTROLS:

1. ALL THERMOSTATS AND SENSORS TO BE MOUNTED AT 48" (A.F.F.) TO TOP OF DEVICE BACK BOX UNLESS SPECIFICALLY NOTED OTHERWISE.
2. THERMOSTATS IN PRIVATE OFFICES AND CLASSROOMS SHALL BE ADJUSTABLE TYPE. THERMOSTATS IN COMMON AREAS SHALL BE SENSORS WITH ADJUSTMENT IN REMOTE LOCATION AS REQUIRED BY OWNER.
3. ALL WIRING TO THERMOSTATS SHALL BE ROUTED CONCEALED. WIREMOLD IS NOT ACCEPTABLE.
4. TEMPERATURE CONTROL CONTRACTOR COORDINATE ALL REQUIRED LOCATIONS OF THERMOWELLS WITH MECHANICAL CONTRACTOR.
5. ALL THERMOSTATS, CO2 SENSORS, AND MOTION SENSORS TO HAVE STICK ON LABELS THAT INDICATE NAME OF EQUIPMENT THAT THE CONTROL. LABEL TO BE LOCATED DIRECTLY BELOW DEVICE. VERIFY LABEL LOCATION WITH ENGINEER/OWNER PRIOR TO LABELING ALL DEVICES. ALL DEVICES TO BE LABELED WITH SAME I.D.
6. SEE ALSO M701 FOR ADDITIONAL GENERAL NOTES.

PLAN NOTES:

1. BUILDING STATIC DIFFERENTIAL PRESSURE SENSOR. MOUNT ABOVE CEILING. SEE DETAIL 'B' / M701.

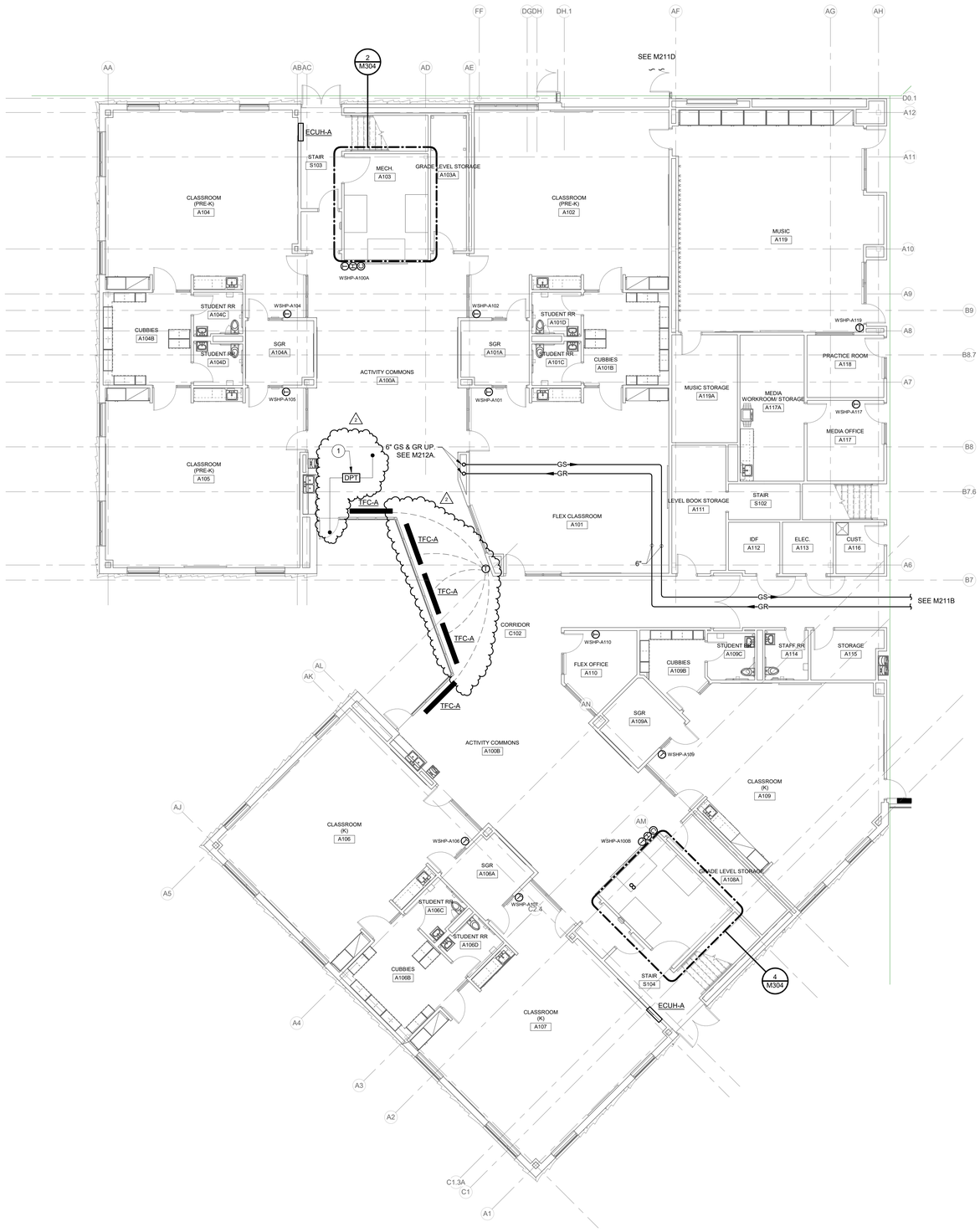

FIRST FLOOR - UNIT A - HYDRONICS

SCALE: 1/8" = 1'-0"

NORTH

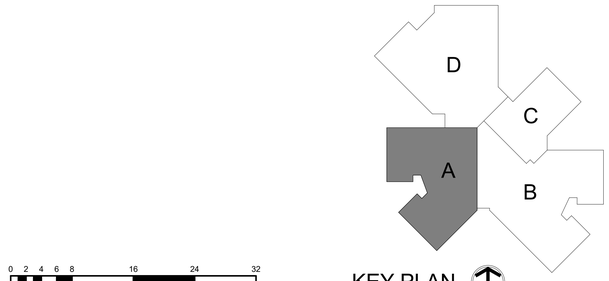

KEY PLAN

NORTH

BCSC TOGETHER WE LEARN

CSO
8831 Keystone Crossing, Indianapolis, IN 46240
317.848.7800 | csoinc.net

© 2018 CSO Architects, Inc. All Rights Reserved

Höweler+Yoon Architecture
617.517.4101 howeleryoon.com

D&A #24063

R.E. Dimond and Associates, Inc.
Consulting Engineers
732 North Capitol Avenue
Indianapolis, IN 46204
Phone: (317) 634-4672
Fax: (317) 638-8725

PROJECT:
BARTHOLOMEW CONSOLIDATED SCHOOL CORPORATION
MAPLE GROVE ELEMENTARY
TIPTON LAKES BLVD, COLUMBUS, IN 47201

SCOPE DRAWINGS:
These drawings indicate the general scope of the project in terms of architectural design concept, the dimensions of major spaces, the general arrangement of equipment and the type of structural, mechanical and electrical systems.
The drawings do not necessarily indicate or describe all work required for the proper performance and completion of the requirements of the Contract.
On the basis of the general scope indicated or described, the trade contractors shall furnish all items required for the proper execution and completion of the work.

REVISIONS:

1	Addendum #1	06/10/2025
2	Addendum #2	06/17/2025

ISSUE DATE	DRAWN BY	CHECKED BY
05/30/2025	EJV	JMC

DRAWING TITLE:
FIRST FLOOR PLAN - UNIT A - HYDRONICS

CERTIFIED BY:
Joseph Michael Cimbala
REGISTERED
No. PE11700335
STATE OF INDIANA
PROFESSIONAL ENGINEER
06 / 30 / 2025

DRAWING NUMBER
M211A

PROJECT NUMBER
2024022

GENERAL NOTES - HYDRONICS:

1. SEE M211A FOR GENERAL NOTES.

PLAN NOTES:

1. BUILDING STATIC DIFFERENTIAL PRESSURE SENSOR. MOUNT ABOVE CEILING. SEE DETAIL 'B' / M701.

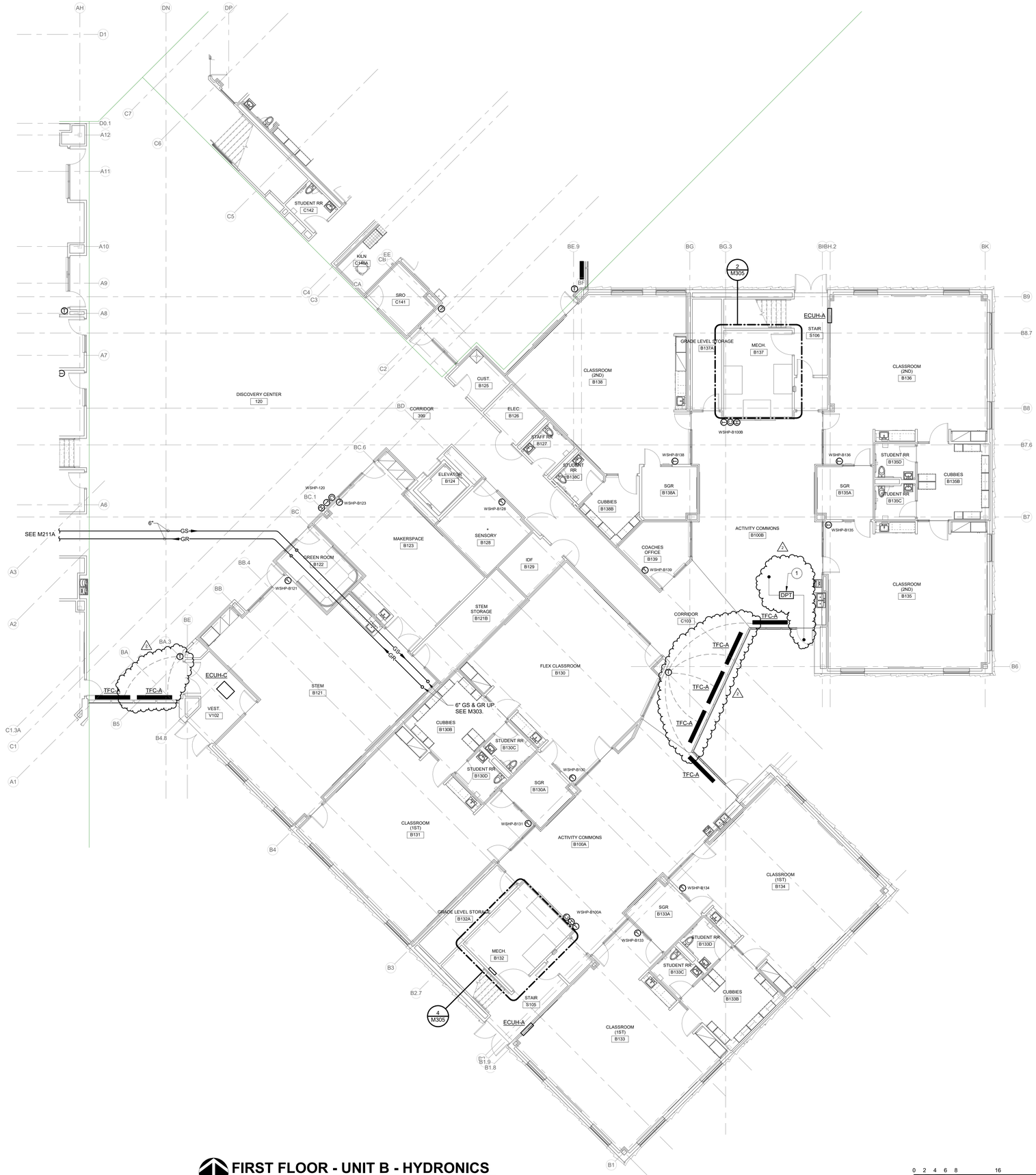

FIRST FLOOR - UNIT B - HYDRONICS

SCALE: 1/8" = 1'-0"

NORTH

KEY PLAN

NORTH

BCSC TOGETHER WE LEARN

CSO

8831 Keystone Crossing, Indianapolis, IN 46240
317.848.7800 | csoinc.net

© 2018 CSO Architects, Inc. All Rights Reserved

Höweler+Yoon Architecture
617.517.4101 howeleryoon.com

D&A #24063

R.E. Dimond and Associates, Inc.
Consulting Engineers

732 North Capitol Avenue
Indianapolis, IN 46204
Phone: (317) 634-4672
Fax: (317) 638-8725

PROJECT:

BARTHOLOMEW CONSOLIDATED SCHOOL CORPORATION
MAPLE GROVE ELEMENTARY
TIPTON LAKES BLVD, COLUMBUS, IN 47201

SCOPE DRAWINGS:

These drawings indicate the general scope of the project in terms of architectural design concept, the dimensions of the building, the major architectural elements and the type of structural, mechanical and electrical systems.

The drawings do not necessarily indicate or describe all work required for full performance and completion of the requirements of the Contract.

On the basis of the general scope indicated or described, the trade contractors shall furnish all items required for the proper execution and completion of the work.

REVISIONS:

1	Addendum #1	06/10/2025
2	Addendum #2	06/17/2025

ISSUE DATE	DRAWN BY	CHECKED BY
05/30/2025	EJV	JMC

DRAWING TITLE:

FIRST FLOOR PLAN - UNIT B - HYDRONICS

CERTIFIED BY:

Joseph Michael Chrapla
REGISTERED
No. PE11700335
STATE OF INDIANA
PROFESSIONAL ENGINEER

05/30/2025

DRAWING NUMBER

M211B

PROJECT NUMBER

2024022

GENERAL NOTES - HYDRONICS:

1. SEE M211A FOR GENERAL NOTES.

PLAN NOTES:

1. NOT USED.

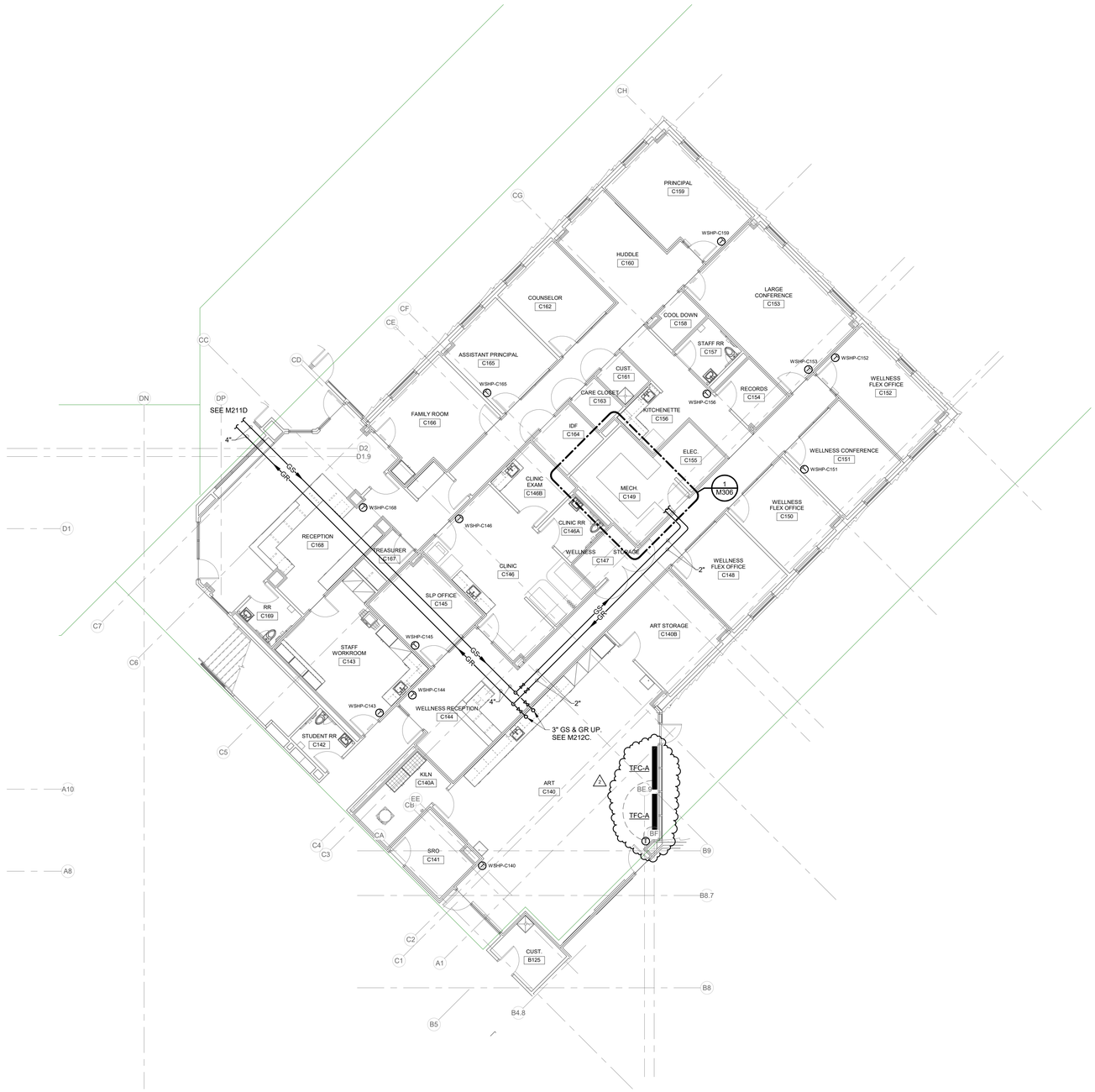

FIRST FLOOR - UNIT C - HYDRONICS

SCALE: 1/8" = 1'-0"

NORTH

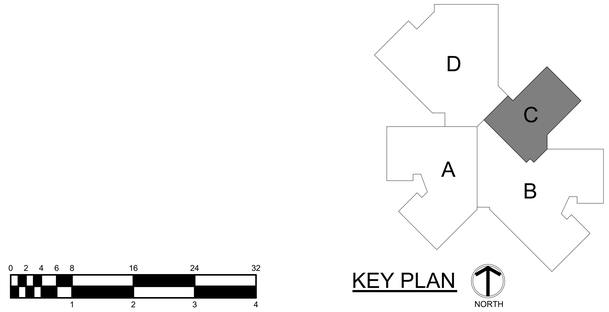

KEY PLAN

NORTH

BCSC TOGETHER WE LEARN

CSO

8831 Keystone Crossing, Indianapolis, IN 46240
317.848.7800 | csoinc.net

© 2018 CSO Architects, Inc. All Rights Reserved

Höweler+Yoon Architecture
617.517.4101 howeleryoon.com

D&A #24063

R.E. Dimond and Associates, Inc.
Consulting Engineers

732 North Capitol Avenue
Indianapolis, IN 46204
Phone: (317) 634-4672
Fax: (317) 638-8725

PROJECT:

BARTHOLOMEW CONSOLIDATED SCHOOL CORPORATION
MAPLE GROVE ELEMENTARY
TIPTON LAKES BLVD, COLUMBUS, IN 47201

SCOPE DRAWINGS:

These drawings indicate the general scope of the project in terms of architectural design concept, the dimensions of the building, the major architectural elements and the type of structural, mechanical and electrical systems.

The drawings do not necessarily indicate or describe all work required for full performance and completion of the requirements of the Contract.

On the basis of the general scope indicated or described, the trade contractors shall furnish all items required for the proper execution and completion of the work.

REVISIONS:

1	Addendum #1	06/10/2025
2	Addendum #2	06/17/2025

ISSUE DATE	DRAWN BY	CHECKED BY
05/30/2025	EJV	JMC

DRAWING TITLE:

FIRST FLOOR PLAN - UNIT C - HYDRONICS

CERTIFIED BY:

Joseph Michael Chrapla
REGISTERED
No. PE11700335
STATE OF INDIANA
PROFESSIONAL ENGINEER

05/30/2025

DRAWING NUMBER

M211C

PROJECT NUMBER

2024022

GENERAL NOTES - HYDRONICS:

1. SEE M211A FOR GENERAL NOTES.

PLAN NOTES:

1. MASTER AMBIENT TEMPERATURE, CO_2, AND HUMIDITY SENSOR. MOUNT AT 12'-0" ABOVE GRADE. COORDINATE LOCATION WITH OWNER.
2. BUILDING STATIC DIFFERENTIAL PRESSURE SENSOR. MOUNT ABOVE CEILING. SEE DETAIL 'B' / M701.

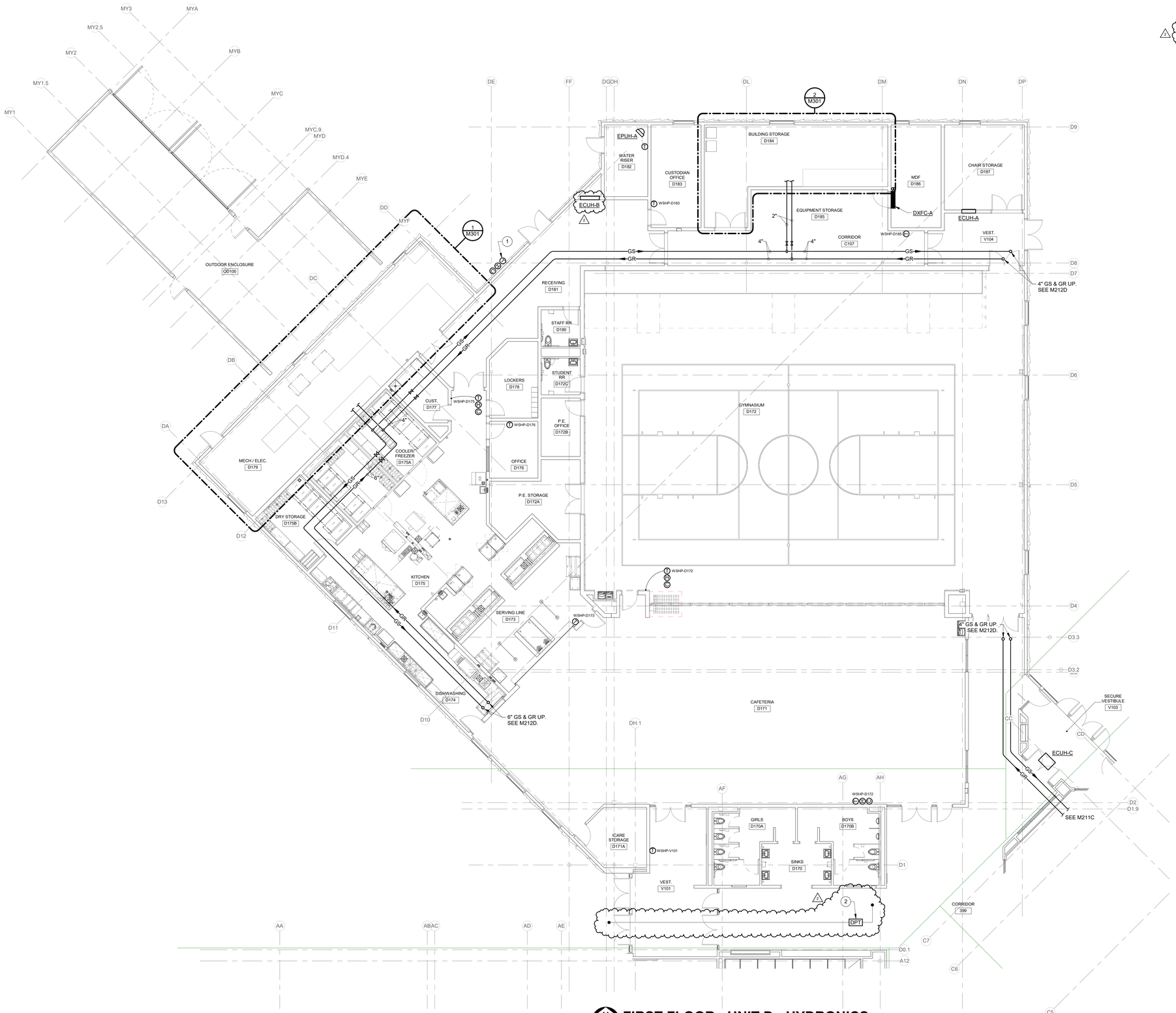

FIRST FLOOR - UNIT D - HYDRONICS

SCALE: 1/8" = 1'-0"

NORTH

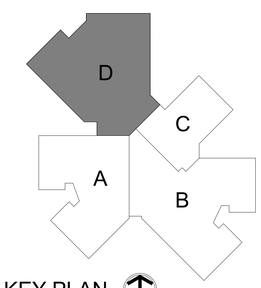

KEY PLAN

NORTH

BCSC TOGETHER WE LEARN

CSO

8831 Keystone Crossing, Indianapolis, IN 46240
317.848.7800 | csoinc.net

© 2018 CSO Architects, Inc. All Rights Reserved

Höweler+Yoon Architecture
617.517.4101 howeleryoon.com

D&A #24063

R.E. Dimond and Associates, Inc.
Consulting Engineers

732 North Capitol Avenue
Indianapolis, IN 46204
Phone: (317) 634-4672
Fax: (317) 638-8725

PROJECT:

BARTHOLOMEW CONSOLIDATED SCHOOL CORPORATION
MAPLE GROVE ELEMENTARY
TIPTON LAKES BLVD, COLUMBUS, IN 47201

SCOPE DRAWINGS:

These drawings indicate the general scope of the project in terms of architectural design concept, the dimensions of the building, the major architectural elements and the type of structural, mechanical and electrical systems.
The drawings do not necessarily indicate or describe all work required for full performance and completion of the requirements of the Contract.
On the basis of the general scope indicated or described, the trade contractors shall furnish all items required for the proper execution and completion of the work.

REVISIONS:

1	Addendum #1	06/10/2025
2	Addendum #2	06/17/2025

ISSUE DATE	DRAWN BY	CHECKED BY
05/30/2025	EJV	JMC

DRAWING TITLE:

FIRST FLOOR PLAN - UNIT D - HYDRONICS

CERTIFIED BY:

Joseph Michael Chrapla
REGISTERED
No. PE11700335
STATE OF INDIANA
PROFESSIONAL ENGINEER

05/30/2025

DRAWING NUMBER

M211D

PROJECT NUMBER

2024022

GENERAL NOTES - HYDRONICS:

1. SEE M211A FOR GENERAL NOTES.

PLAN NOTES:

1. BUILDING STATIC DIFFERENTIAL PRESSURE SENSOR. MOUNT ABOVE CEILING. SEE DETAIL 'B' / M701.

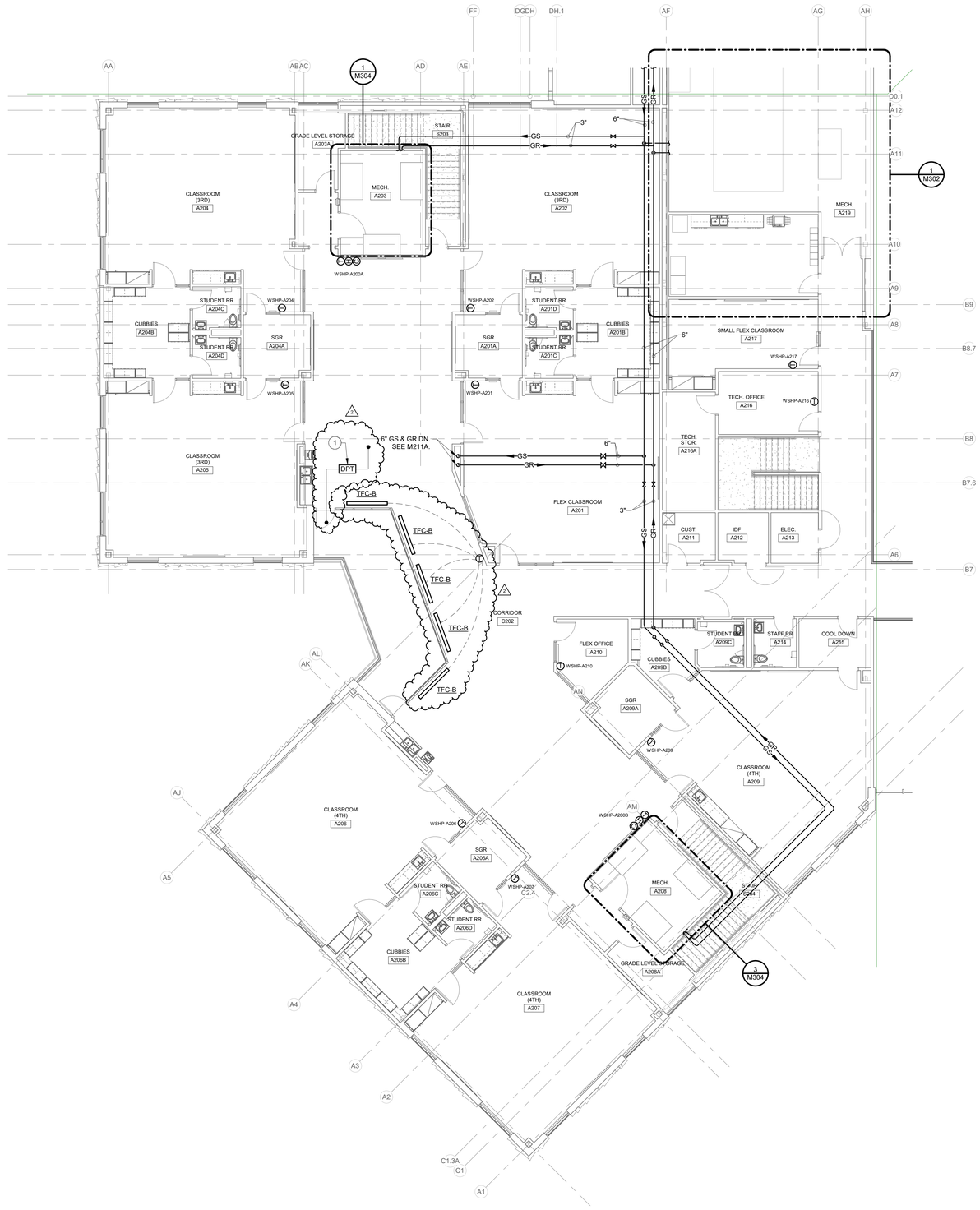

SECOND FLOOR - UNIT A - HYDRONICS

SCALE: 1/8" = 1'-0"

NORTH

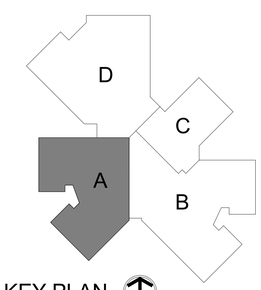

KEY PLAN

NORTH

BCSC TOGETHER WE LEARN

CSO

8831 Keystone Crossing, Indianapolis, IN 46240
317.848.7800 | csoinc.net

© 2018 CSO Architects, Inc. All Rights Reserved

Höweler+Yoon Architecture
617.517.4101 howeleryoon.com

D&A #24063

R.E. Dimond and Associates, Inc.
Consulting Engineers

732 North Capitol Avenue
Indianapolis, IN 46204
Phone: (317) 634-4672
Fax: (317) 638-8725

PROJECT:

BARTHOLOMEW CONSOLIDATED SCHOOL CORPORATION
MAPLE GROVE ELEMENTARY
TIPTON LAKES BLVD, COLUMBUS, IN 47201

SCOPE DRAWINGS:

These drawings indicate the general scope of the project in terms of architectural design concept, the dimensions of the building, the major architectural elements and the type of structural, mechanical and electrical systems.

The drawings do not necessarily indicate or describe all work required for full performance and completion of the requirements of the Contract.

On the basis of the general scope indicated or described, the trade contractors shall furnish all items required for the proper execution and completion of the work.

REVISIONS:

1	Addendum #1	06/10/2025
2	Addendum #2	06/17/2025

ISSUE DATE	DRAWN BY	CHECKED BY
05/30/2025	EJV	JMC

DRAWING TITLE:

SECOND FLOOR PLAN - UNIT A - HYDRONICS

CERTIFIED BY:

Joseph Michael Chrapla
REGISTERED
No. PE11700335
STATE OF INDIANA
PROFESSIONAL ENGINEER

05/30/2025

DRAWING NUMBER

M212A

PROJECT NUMBER

2024022

GENERAL NOTES - HYDRONICS:

1. SEE M211A FOR GENERAL NOTES.

PLAN NOTES:

1. BUILDING STATIC DIFFERENTIAL PRESSURE SENSOR. MOUNT ABOVE CEILING. SEE DETAIL 'B' / M701.

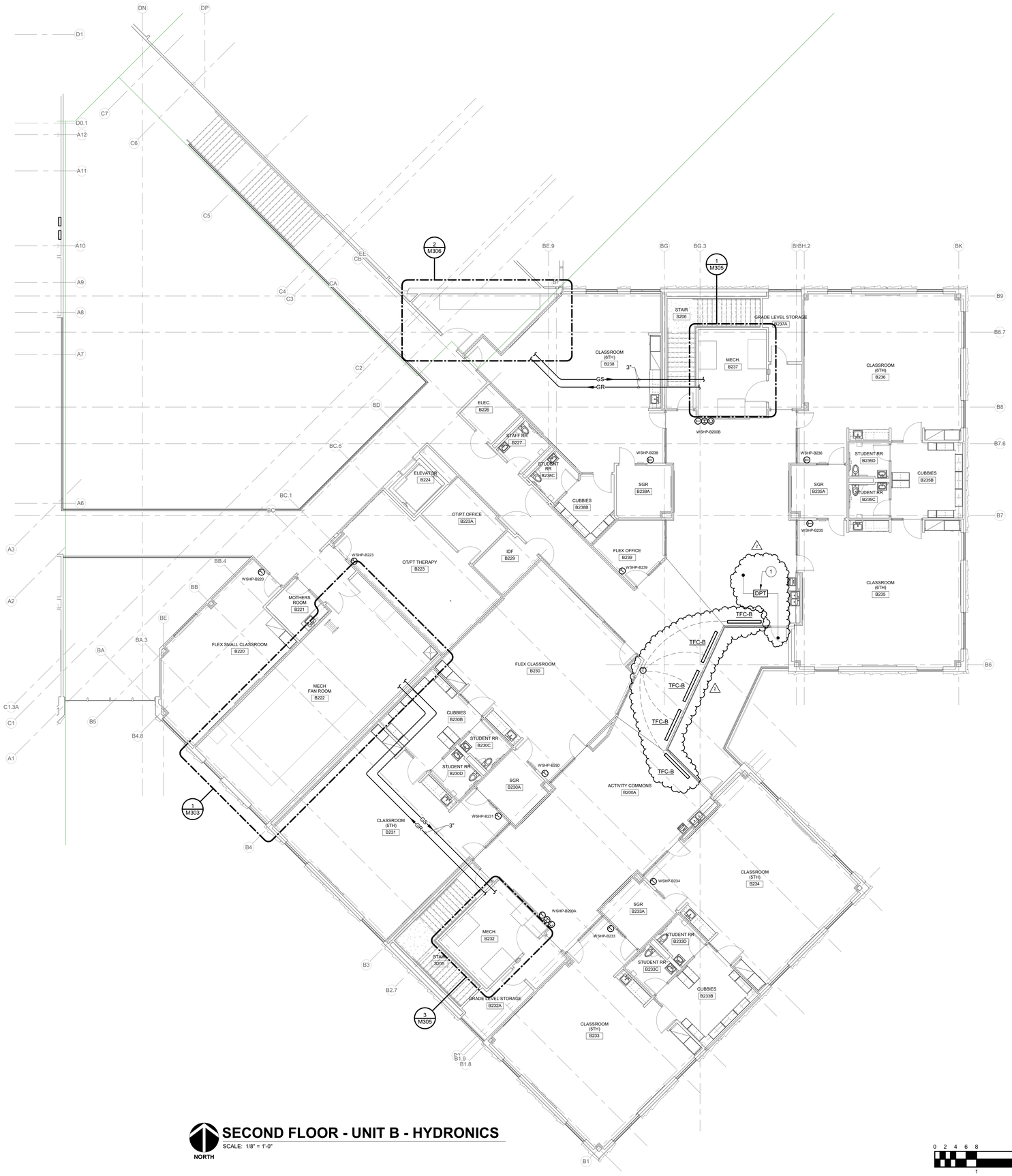

SECOND FLOOR - UNIT B - HYDRONICS

SCALE: 1/8" = 1'-0"

NORTH

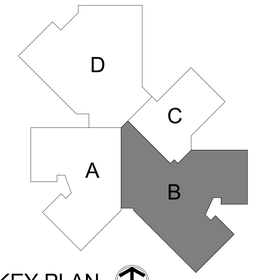

KEY PLAN

NORTH

BCSC TOGETHER WE LEARN

CSO
8831 Keystone Crossing, Indianapolis, IN 46240
317.848.7800 | csoinc.net

© 2018 CSO Architects, Inc. All Rights Reserved

Höweler+Yoon Architecture
617.517.4101 howeleryoon.com

D&A #24063
R.E. Dimond and Associates, Inc.
Consulting Engineers
732 North Capitol Avenue
Indianapolis, IN 46204
Phone: (317) 634-4672
Fax: (317) 638-8725

PROJECT:
BARTHOLOMEW CONSOLIDATED SCHOOL CORPORATION
MAPLE GROVE ELEMENTARY
TIPTON LAKES BLVD, COLUMBUS, IN 47201

SCOPE DRAWINGS:
These drawings indicate the general scope of the project in terms of architectural design concept, the dimensions of the building, the major architectural elements and the type of structural, mechanical and electrical systems.
The drawings do not necessarily indicate or describe all work required for full performance and completion of the requirements of the Contract.
On the basis of the general scope indicated or described, the trade contractors shall furnish all items required for the proper execution and completion of the work.

REVISIONS:

1	Addendum #1	06/10/2025
2	Addendum #2	06/17/2025

ISSUE DATE	DRAWN BY	CHECKED BY
05/30/2025	EJV	JMC

DRAWING TITLE:
SECOND FLOOR PLAN - UNIT B - HYDRONICS

CERTIFIED BY:
Joseph Michael Chrapla
REGISTERED
No. PE11700335
STATE OF INDIANA
PROFESSIONAL ENGINEER
05/30/2025

DRAWING NUMBER
M212B

PROJECT NUMBER
2024022

GENERAL NOTES - HYDRONICS:

1. SEE M211A FOR GENERAL NOTES.

PLAN NOTES:

1. NOT USED.

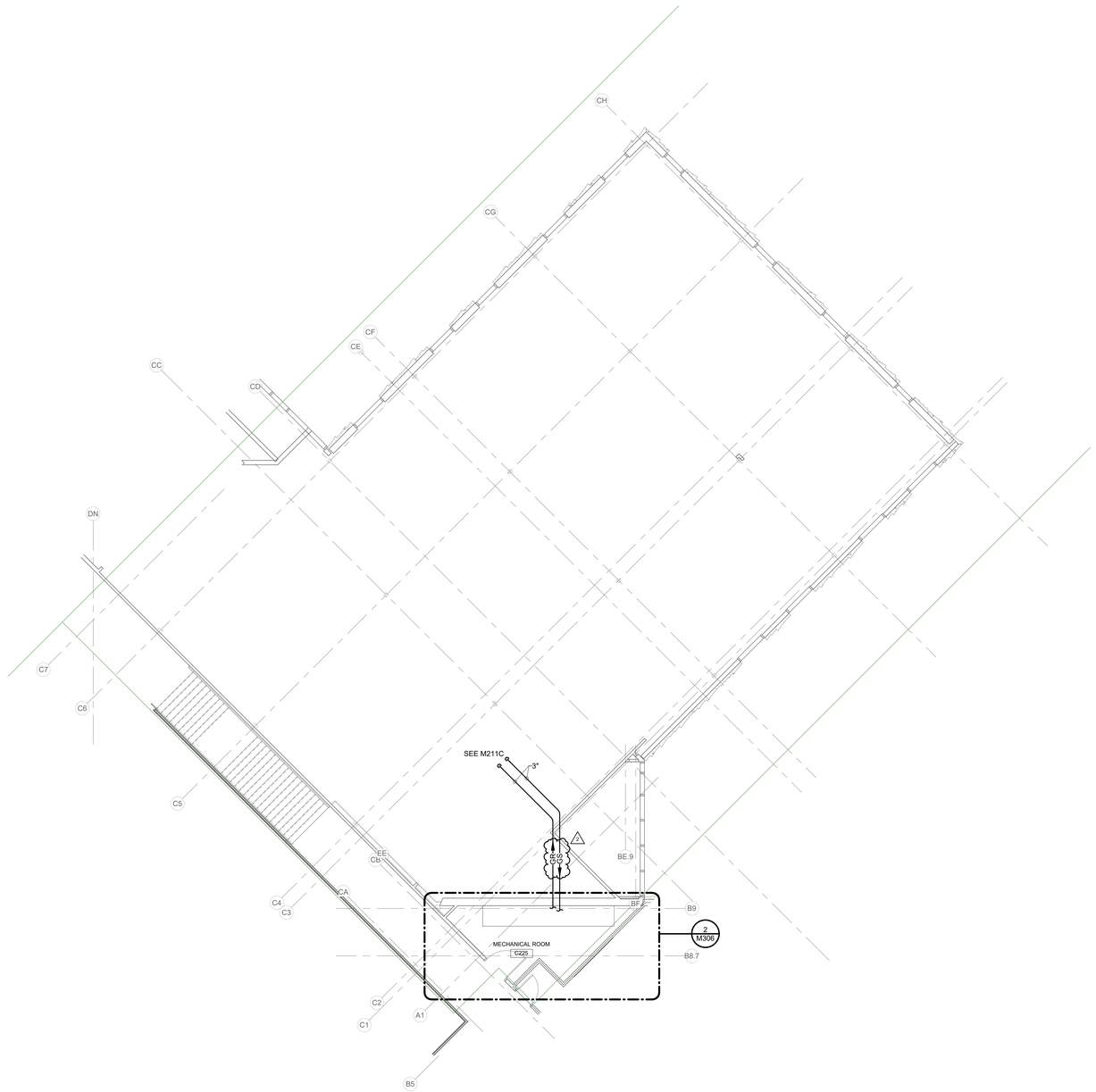

SECOND FLOOR - UNIT C - HYDRONICS

SCALE: 1/8" = 1'-0"

NORTH

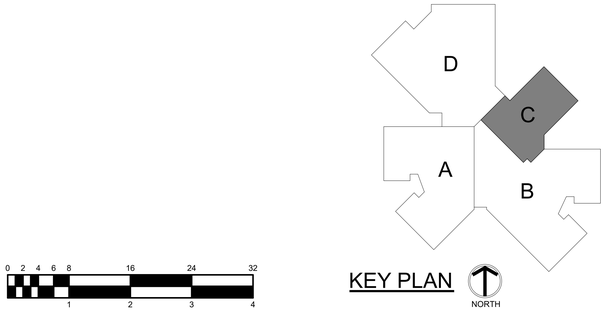

KEY PLAN

NORTH

0 2 4 6 8 16 24 32

1 2 3 4

BCSC TOGETHER WE LEARN

CSO

8831 Keystone Crossing, Indianapolis, IN 46240
317.848.7800 | csoinc.net

© 2018 CSO Architects, Inc. All Rights Reserved

Höweler+Yoon Architecture
617.517.4101 howeleryoon.com

D&A #24063

R.E. Dimond and Associates, Inc.
Consulting Engineers

732 North Capitol Avenue
Indianapolis, IN 46204
Phone: (317) 634-4672
Fax: (317) 638-8725

PROJECT:

BARTHOLOMEW CONSOLIDATED SCHOOL CORPORATION
MAPLE GROVE ELEMENTARY
TIPTON LAKES BLVD, COLUMBUS, IN 47201

SCOPE DRAWINGS:

These drawings indicate the general scope of the project in terms of architectural design concept, the dimensions of the building, the major architectural elements and the type of structural, mechanical and electrical systems.

The drawings do not necessarily indicate or describe all work required for full performance and completion of the requirements of the Contract.

On the basis of the general scope indicated or described, the trade contractors shall furnish all items required for the proper execution and completion of the work.

REVISIONS:

2	Addendum #2	06/17/2025

ISSUE DATE	DRAWN BY	CHECKED BY
05/30/2025	EJV	JMC

DRAWING TITLE:

SECOND FLOOR PLAN - UNIT C - HYDRONICS

CERTIFIED BY:

Joseph Michael Chrapla
REGISTERED
No. PE11700335
STATE OF INDIANA
PROFESSIONAL ENGINEER

05/30/2025

DRAWING NUMBER

M212C

PROJECT NUMBER

2024022

GENERAL NOTES - HYDRONICS:

1. SEE M211A FOR GENERAL NOTES.

PLAN NOTES:

1. NOT USED.

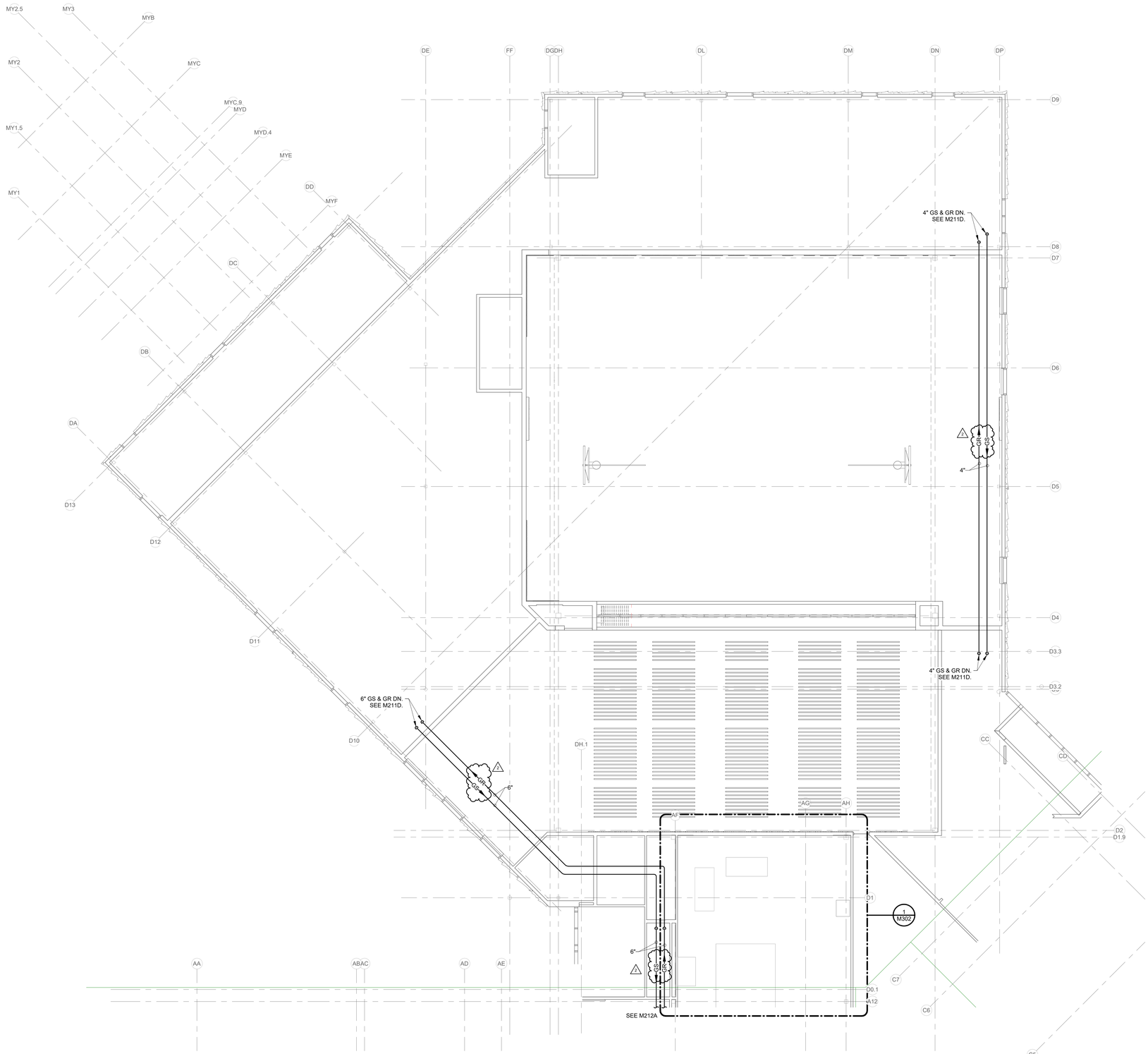

SECOND FLOOR - UNIT D - HYDRONICS

SCALE: 1/8" = 1'-0"

NORTH

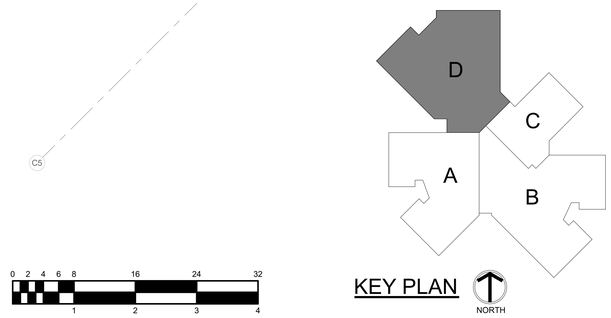

KEY PLAN

NORTH

BCSC
TOGETHER WE LEARN

CSO
8831 Keystone Crossing, Indianapolis, IN 46240
317.848.7800 | csoinc.net

© 2018 CSO Architects, Inc. All Rights Reserved

Höweler+Yoon Architecture
617.517.4101 howeleryoon.com

D&A #24063

R.E. Dimond and Associates, Inc.
Consulting Engineers

732 North Capitol Avenue
Indianapolis, IN 46204
Phone: (317) 634-4672
Fax: (317) 638-8725

PROJECT:
BARTHOLOMEW CONSOLIDATED SCHOOL CORPORATION
MAPLE GROVE ELEMENTARY
TIPTON LAKES BLVD, COLUMBUS, IN 47201

SCOPE DRAWINGS:
These drawings indicate the general scope of the project in terms of architectural design concept, the dimensions of the building, the major architectural elements and the type of structural, mechanical and electrical systems.
The drawings do not necessarily indicate or describe all work required for full performance and completion of the requirements of the Contract.
On the basis of the general scope indicated or described, the trade contractors shall furnish all items required for the proper execution and completion of the work.

REVISIONS:

1	Addendum #1	06/10/2025
2	Addendum #2	06/17/2025

ISSUE DATE	DRAWN BY	CHECKED BY
05/30/2025	EJV	JMC

DRAWING TITLE:
SECOND FLOOR PLAN - UNIT D - HYDRONICS

CERTIFIED BY:
Joseph Michael Chrapla
REGISTERED
No. PE11700335
STATE OF INDIANA
PROFESSIONAL ENGINEER
05/30/2025

DRAWING NUMBER
M212D

PROJECT NUMBER
2024022

GENERAL NOTES:

1. SEE M201A AND M211A FOR GENERAL NOTES.

PLAN NOTES:

1. 4"ø DRYER EXHAUST VENT. SEE DETAIL 'H' / M401.
2. 4"ø CONCENTRIC VENT FROM WATER HEATER. SEE DETAIL 'G' / M401.
3. HEAT PUMP TO SIT ON MINI-SPLIT RAIL SUPPORT LIKE UNIFLEX BY MIRO INDUSTRIES.

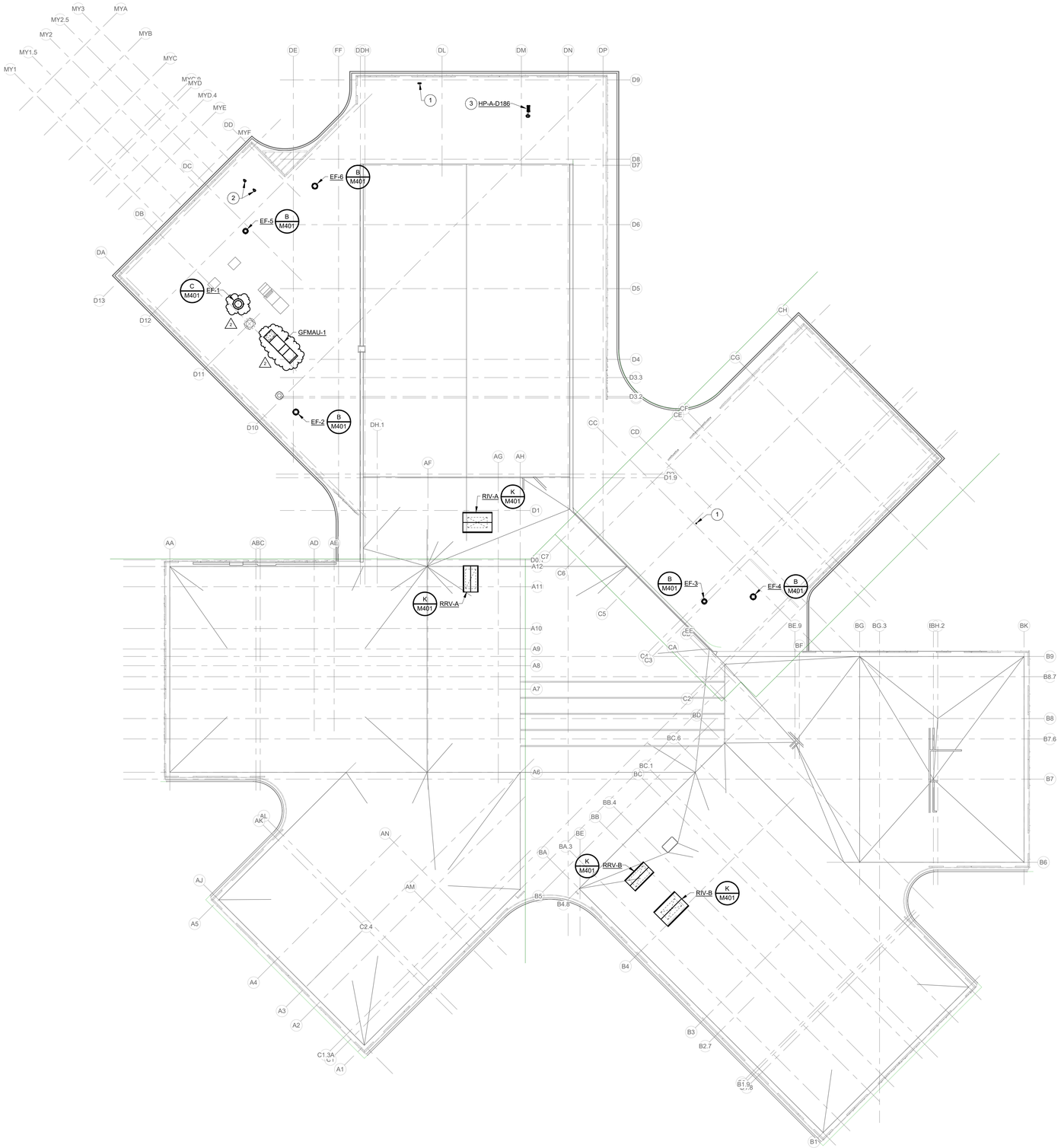

ROOF PLAN - MECHANICAL

SCALE: 1/16" = 1'-0"

NORTH

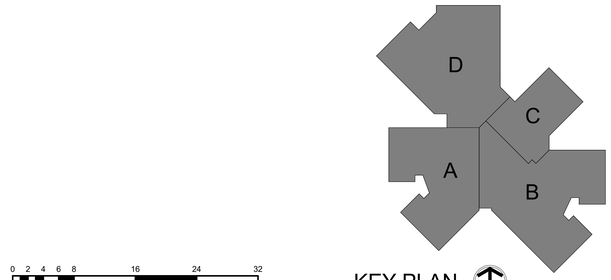

KEY PLAN

NORTH

BCSC TOGETHER WE LEARN

CSO

8831 Keystone Crossing, Indianapolis, IN 46240
317.848.7800 | csoinc.net

© 2018 CSO Architects, Inc. All Rights Reserved

Höweler+Yoon Architecture
617.517.4101 howeleryoon.com

D&A #24063

R.E. Dimond and Associates, Inc.
Consulting Engineers

732 North Capitol Avenue
Indianapolis, IN 46204
Phone: (317) 634-4672
Fax: (317) 638-8725

PROJECT:

BARTHOLOMEW CONSOLIDATED SCHOOL CORPORATION
MAPLE GROVE ELEMENTARY
TIPTON LAKES BLVD, COLUMBUS, IN 47201

SCOPE DRAWINGS:

These drawings indicate the general scope of the project in terms of architectural design concept, the dimensions of the building, the major architectural elements and the type of structural, mechanical and electrical systems.

The drawings do not necessarily indicate or describe all work required for full performance and completion of the requirements of the Contract.

On the basis of the general scope indicated or described, the trade contractors shall furnish all items required for the proper execution and completion of the work.

REVISIONS:

2	Addendum #2	06/17/2025

ISSUE DATE	DRAWN BY	CHECKED BY
05/30/2025	EJV	JMC

DRAWING TITLE:

ROOF PLAN - MECHANICAL

CERTIFIED BY:

Joseph Michael Chrapla
REGISTERED
No. PE11700335
STATE OF INDIANA
PROFESSIONAL ENGINEER

05/30/2025

DRAWING NUMBER

M220

PROJECT NUMBER

2024022

- VAV MECHANICAL D179					
TAG	VAV SIZE - CFM	TYPE	SPACE NAME	SPACE NUMBER	SHEET
VAV-D183	A-140	VAV Size A (6)			M301
VAV-D175	B-520	VAV Size B (8)	MECH./ ELEC.	D179	M301

- WSHP MECHANICAL D179				
TAG	WSHP TYPE	SPACE NAME	SPACE NUMBER	SHEET
WSHP-D173	D-800	MECH./ ELEC.	D179	M301
WSHP-D175	G-1800	MECH./ ELEC.	D179	M301
WSHP-D176	C-600	BUILDING STORAGE	D184	M301
WSHP-D183	E-1000	BUILDING STORAGE	D184	M301
WSHP-D185	E-1150	BUILDING STORAGE	D184	M301

GENERAL NOTES:

1. INSTALL ALL ACTUATORS SO THAT THEY ARE ACCESSIBLE FROM A 10'-0" LADDER.
2. MOUNT ALL VFD'S FOR PUMPS ON UNISTRUT OR WALL.
3. SEE M702 GROUND LOOP SYSTEM SCHEMATIC.
4. ALL CONTROL DAMPERS BY DIVISION 23 33 00.
5. ALL CONTROL DAMPERS THAT ARE EXPOSED TO AMBIENT CONDITIONS ON ONE SIDE SHALL BE INSULATED DAMPERS.
6. RUN WSHP CONDENSATE DRAIN LINES FULL SIZE TO NEAREST FLOOR DRAIN. TERMINATE OVER FLOOR DRAIN WITH 90° ELBOW.
7. ALL ERV'S AND WSHP'S TO BE INSTALLED ON CONCRETE HOUSE KEEPING PADS. SEE DETAIL 'A' / M411.
8. SEE M201A AND M211A FOR ADDITIONAL GENERAL NOTES.

2

PLAN NOTES:

1. TEMPERATURE CONTROL PANEL (TCP).
2. INTAKE AND VENT PIPING FROM DOMESTIC WATER HEATER UP THRU ROOF AND TERMINATE WITH CONCENTRIC VENT. SEE DETAIL 'G' / M401.
3. FLUSHING STATION. PROVIDE SERVICE PORTS AND MANUAL ISOLATION VALVES AT THIS LOCATION. SEE SCHEMATIC ON M702.

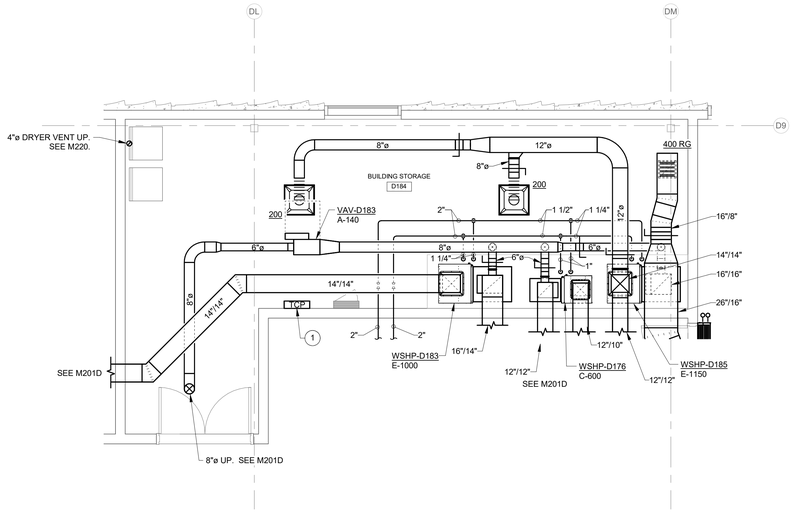

2 UNIT D - ENLARGED BUILDING STORAGE D184 - MECHANICAL

SCALE: 1/4" = 1'-0"

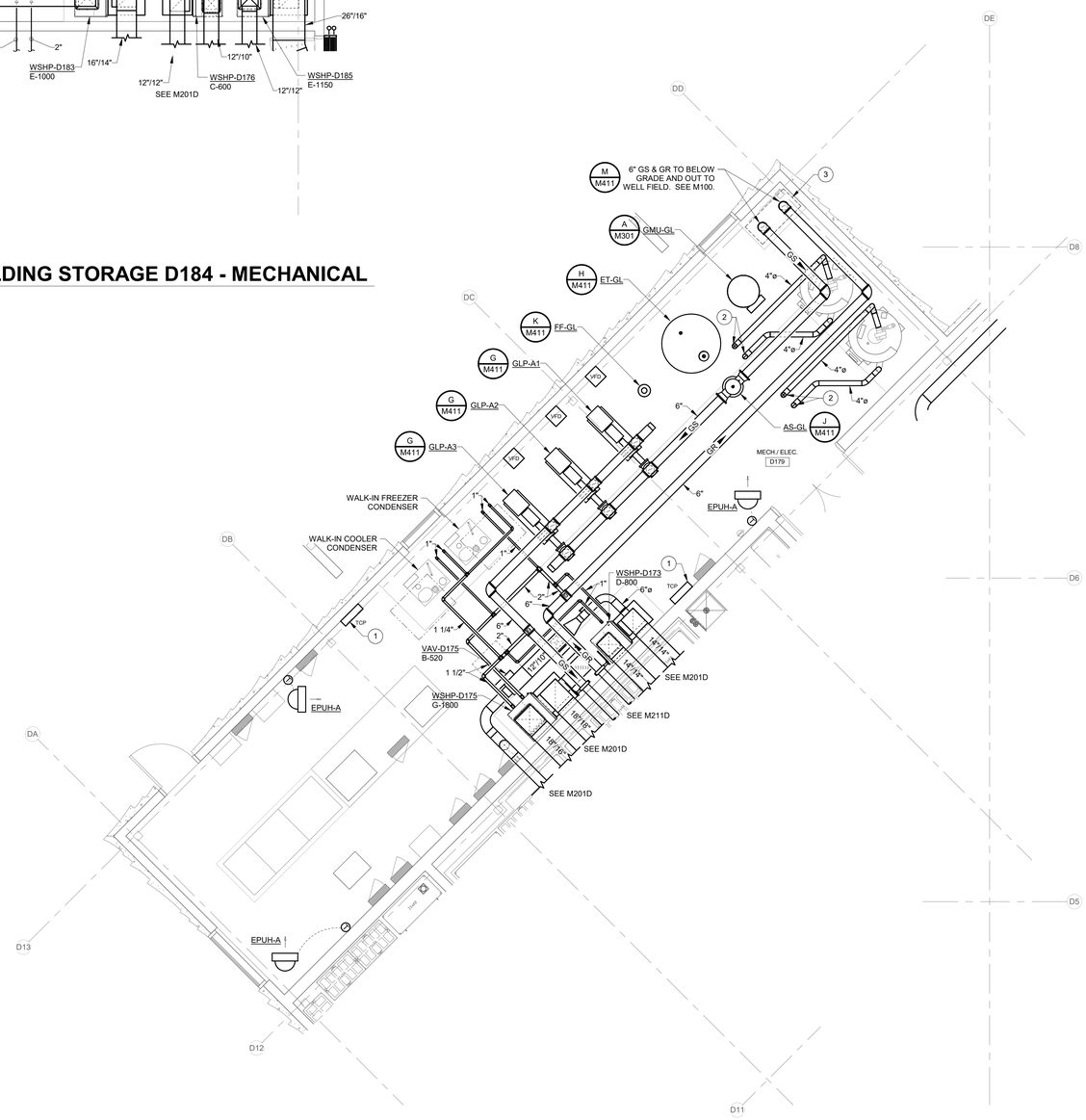

1 UNIT D - ENLARGED MECHANICAL ROOM D179 - MECHANICAL

SCALE: 1/4" = 1'-0"

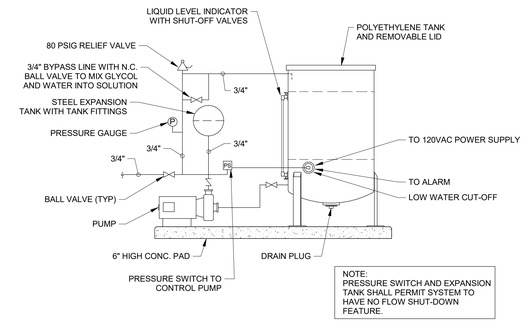

A GLYCOL MAKE-UP SYSTEM

SCALE: NONE

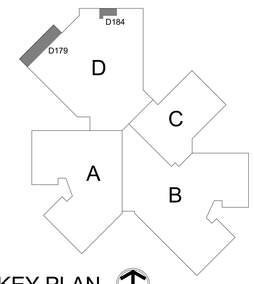

KEY PLAN

NORTH

BCSC TOGETHER WE LEARN

CSO
8831 Keystone Crossing, Indianapolis, IN 46240
317.848.7800 | csoinc.net

© 2018 CSO Architects, Inc. All Rights Reserved

Höweler+Yoon Architecture
617.517.4101 howeleryoon.com

D&A #24063
R.E. Dimond and Associates, Inc.
Consulting Engineers
732 North Capitol Avenue
Indianapolis, IN 46204
Phone: (317) 634-4672
Fax: (317) 638-8725

PROJECT:
BARTHOLOMEW CONSOLIDATED SCHOOL CORPORATION
MAPLE GROVE ELEMENTARY
TIPTON LAKES BLVD, COLUMBUS, IN 47201

SCOPE DRAWINGS:
These drawings indicate the general scope of the project in terms of architectural design concept, the dimensions of the building, the major architectural elements and the type of structural, mechanical and electrical systems.
The drawings do not necessarily indicate or describe all work required for the performance and completion of the requirements of the Contract.
On the basis of the general scope indicated or described, the trade contractors shall furnish all items required for the proper execution and completion of the work.

REVISIONS:

1	Addendum #1	06/10/2025
2	Addendum #2	06/17/2025

ISSUE DATE	DRAWN BY	CHECKED BY
05/30/2025	JMC	JMC

DRAWING TITLE:
UNIT D - ENLARGED MECHANICAL ROOMS - MECHANICAL

CERTIFIED BY:
Joseph Michael Cherry
REGISTERED
No. PE11700335
STATE OF INDIANA
PROFESSIONAL ENGINEER
06/30/2025

DRAWING NUMBER
M301

PROJECT NUMBER
2024022

- VAV MECHANICAL A219					
TAG	VAV SIZE - CFM	TYPE	SPACE NAME	SPACE NUMBER	SHEET
VAV-D171	E-1800	VAV Size E (14)			M302
VAV-120	D-1200	VAV Size D (12)	MECH.	A219	M302
VAV-D172	E-2000	VAV Size E (14)	MECH.	A219	M302
VAV-V101	A-150	VAV Size A (6)	MECH.	A219	M302

- WSHP MECHANICAL A219				
TAG	WSHP TYPE	SPACE NAME	SPACE NUMBER	SHEET
WSHP-120	L-6000	MECH.	A219	M302
WSHP-D171	L-5600	MECH.	A219	M302
WSHP-D172	M-8000	MECH.	A219	M302
WSHP-V101	E-1200	MECH.	A219	M302

GENERAL NOTES:

1. SEE M301 FOR GENERAL NOTES.

PLAN NOTES:

1. RETURN GRILLE TO BE INSTALLED 11'-0" AFF TO CENTERLINE OF GRILLE. GRILLE TO BE PRIME COAT FINISHED FOR FIELD PAINTING. INTERNALLY LINE RETURN PLENUM ON BACK OF RETURN GRILLE WITH 1" ACOUSTICAL LINING.
2. 1 1/2" CONDENSATE DRAIN LINE FROM ERV-A TO NEAREST FLOOR DRAIN. TERMINATE OVER FLOOR DRAIN WITH 90° ELBOW. 2

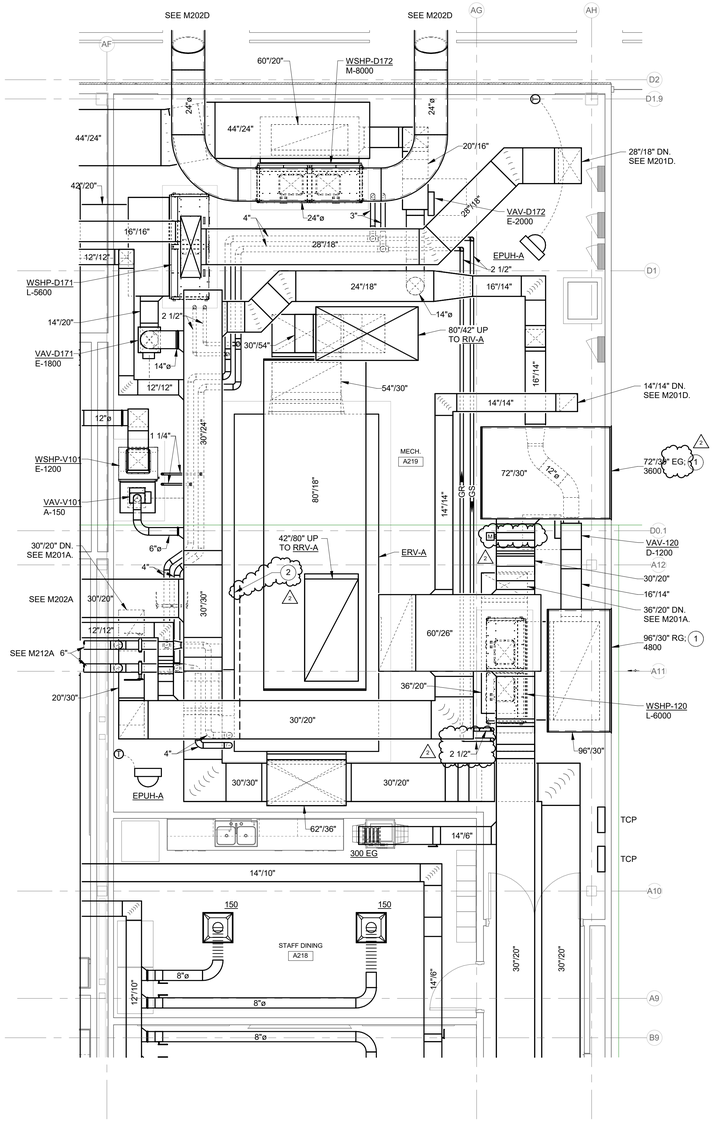

UNIT A - ENLARGED MECHANICAL ROOM A219 - MECHANICAL

SCALE: 1/4" = 1'-0"

NORTH

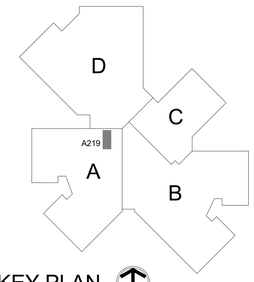

0 1 2 3 4 8 12 16
1 2 3 4

KEY PLAN

NORTH

BCSC
TOGETHER WE LEARN

CSO
8831 Keystone Crossing, Indianapolis, IN 46240
317.848.7800 | csoinc.net

© 2018 CSO Architects, Inc. All Rights Reserved

Höweler+Yoon Architecture
617.517.4101 howeleryoon.com

D&A #24063

R.E. Dimond and Associates, Inc.
Consulting Engineers
732 North Capitol Avenue
Indianapolis, IN 46204
Phone: (317) 634-4672
Fax: (317) 638-8725

PROJECT:
BARTHOLOMEW CONSOLIDATED SCHOOL CORPORATION
MAPLE GROVE ELEMENTARY
TIPTON LAKES BLVD, COLUMBUS, IN 47201

SCOPE DRAWINGS:
These drawings indicate the general scope of the project in terms of architectural design concept, the dimensions of the building, the major architectural elements and the type of structural, mechanical and electrical systems.
The drawings do not necessarily indicate or describe all work required for full performance and completion of the requirements of the Contract.
On the basis of the general scope indicated or described, the trade contractors shall furnish all items required for the proper execution and completion of the work.

REVISIONS:

1	Addendum #1	06/10/2025
2	Addendum #2	06/17/2025

ISSUE DATE	DRAWN BY	CHECKED BY
05/30/2025	JMC	JMC

DRAWING TITLE:
UNIT A - ENLARGED MECHANICAL ROOM A219 - MECHANICAL

CERTIFIED BY:
Joseph Michael Chrapla
REGISTERED
No. PE11700335
STATE OF INDIANA
PROFESSIONAL ENGINEER
05/30/2025

DRAWING NUMBER
M302

PROJECT NUMBER
2024022

- VAV MECHANICAL B222					
TAG	VAV SIZE - CFM	TYPE	SPACE NAME	SPACE NUMBER	SHEET
VAV-B123	B-450	VAV Size B (8)	MECH FAN ROOM	B222	M303
VAV-B220	A-300	VAV Size A (6)	MECH FAN ROOM	B222	M303

- WSHP MECHANICAL B222				
TAG	WSHP TYPE	SPACE NAME	SPACE NUMBER	SHEET
WSHP-B123	P-700	MECH FAN ROOM	B222	M303
WSHP-B220	C-600	MECH FAN ROOM	B222	M303

GENERAL NOTES:

1. SEE M301 FOR ADDITIONAL GENERAL NOTES.

PLAN NOTES:

1. 4" GROUND LOOP SYSTEM MINIMUM FLOW BYPASS VALVE. VALVE TO BE MOUNTED ON WALL AT 5'-0" AFF. SEE DETAIL 'A' / M303.
2. 6" GS & GR FROM BELOW, 4" GS & GR TO ERV-B AND 3" GS & GR TO UNIT B. SEE M211B AND M212B.
3. 1 1/2" CONDENSATE DRAIN LINE FROM ERV-B TO NEAREST FLOOR DRAIN. TERMINATE OVER FLOOR DRAIN WITH 90° ELBOW.

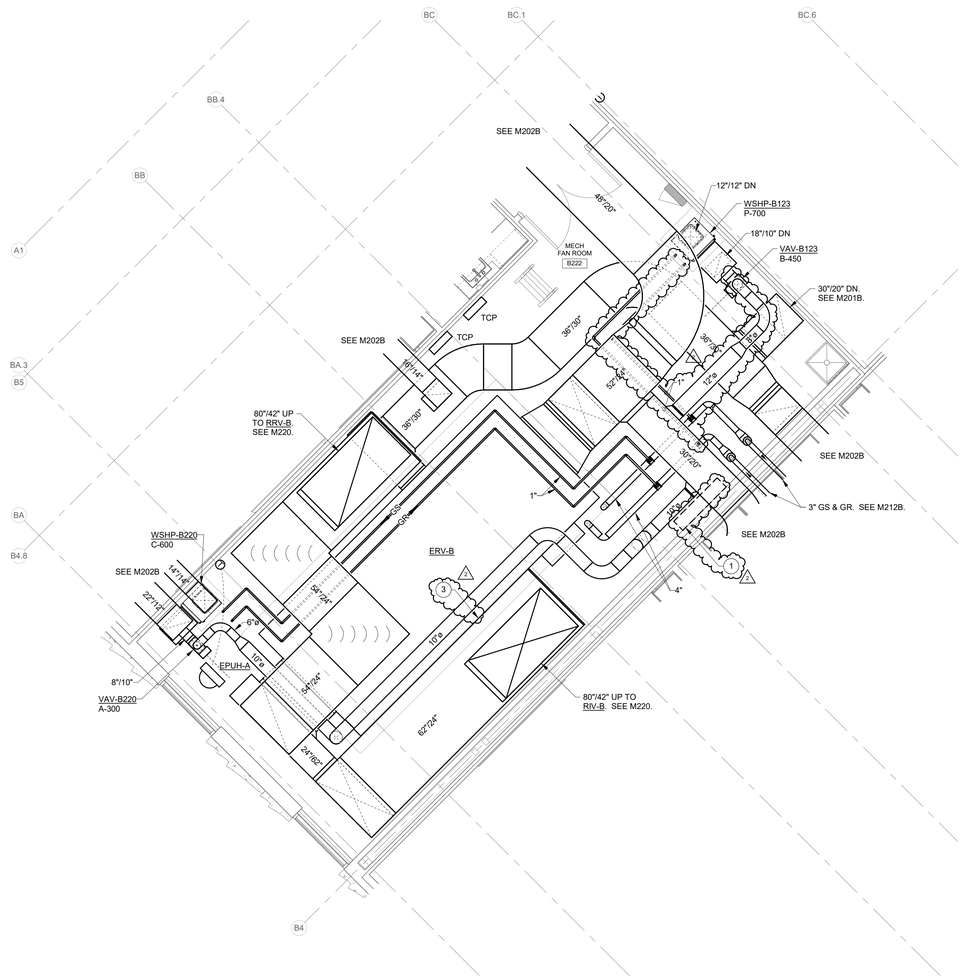

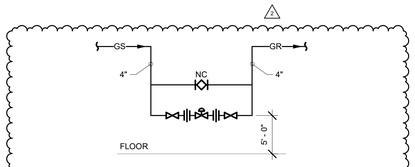

A MINIMUM FLOW BYPASS DETAIL

SCALE: NONE

UNIT B - ENLARGED MECHANICAL ROOM B222 - MECHANICAL

SCALE: 1/4" = 1'-0"

NORTH

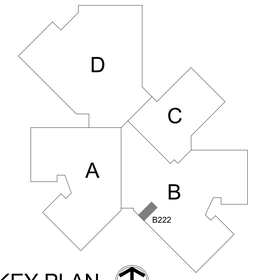

0 1 2 3 4 8 12 16

1 2 3 4

KEY PLAN

NORTH

BCSC TOGETHER WE LEARN

CSO

8831 Keystone Crossing, Indianapolis, IN 46240
317.848.7800 | csoinc.net

© 2018 CSO Architects, Inc. All Rights Reserved

Höweler+Yoon Architecture
617.517.4101 howeleryoon.com

D&A #24063

R.E. Dimond and Associates, Inc.
Consulting Engineers

732 North Capitol Avenue
Indianapolis, IN 46204
Phone: (317) 634-4672
Fax: (317) 638-8725

PROJECT:
BARTHOLOMEW CONSOLIDATED SCHOOL CORPORATION
MAPLE GROVE ELEMENTARY
TIPTON LAKES BLVD, COLUMBUS, IN 47201

SCOPE DRAWINGS:

These drawings indicate the general scope of the project in terms of architectural design concept, the dimensions of the building, the major architectural elements and the type of structural, mechanical and electrical systems.

The drawings do not necessarily indicate or describe all work required for full performance and completion of the requirements of the Contract.

On the basis of the general scope indicated or described, the trade contractors shall furnish all items required for the proper execution and completion of the work.

REVISIONS:

1	Addendum #1	06/10/2025
2	Addendum #2	06/17/2025

ISSUE DATE	DRAWN BY	CHECKED BY
05/30/2025	JMC	JMC

DRAWING TITLE:
UNIT B - ENLARGED MECHANICAL ROOM B222 - MECHANICAL

CERTIFIED BY:

Joseph Michael Chrapla
REGISTERED
No. PE11700335
STATE OF INDIANA
PROFESSIONAL ENGINEER

05/30/2025

DRAWING NUMBER
M303

PROJECT NUMBER
2024022

GENERAL NOTES:

1. SEE M301 FOR ADDITIONAL GENERAL NOTES.

PLAN NOTES:

1. GRILLES TO BE PRIME COAT FINISHED FOR FIELD PAINTING.

- VAV MECHANICAL A103 A108 A203 A208					
TAG	VAV SIZE - CFM	TYPE	SPACE NAME	SPACE NUMBER	SHEET
VAV-A100A	A-300	VAV Size A (6)	MECH.	A103	M304
VAV-A101	B-450	VAV Size B (8)	MECH.	A103	M304
VAV-A102	B-450	VAV Size B (8)	MECH.	A103	M304
VAV-A104	B-450	VAV Size B (8)	MECH.	A103	M304
VAV-A105	B-450	VAV Size B (8)	MECH.	A103	M304
VAV-A119	B-450	VAV Size B (8)	MECH.	A103	M304
VAV-A100B	A-300	VAV Size A (6)	MECH.	A108	M304
VAV-A106	B-450	VAV Size B (8)	MECH.	A108	M304
VAV-A107	B-450	VAV Size B (8)	MECH.	A108	M304
VAV-A109	B-450	VAV Size B (8)	MECH.	A108	M304
VAV-A110	A-20	VAV Size A (6)	MECH.	A108	M304
VAV-A117	A-150	VAV Size A (6)	MECH.	A108	M304
VAV-A200A	A-300	VAV Size A (6)	MECH.	A203	M304
VAV-A201	B-450	VAV Size B (8)	MECH.	A203	M304
VAV-A202	B-450	VAV Size B (8)	MECH.	A203	M304
VAV-A204	B-450	VAV Size B (8)	MECH.	A203	M304
VAV-A205	B-450	VAV Size B (8)	MECH.	A203	M304
VAV-A218	A-300	VAV Size A (6)	MECH.	A203	M304
VAV-A200B	A-300	VAV Size A (6)	MECH.	A208	M304
VAV-A206	B-450	VAV Size B (8)	MECH.	A208	M304
VAV-A207	B-450	VAV Size B (8)	MECH.	A208	M304
VAV-A209	B-450	VAV Size B (8)	MECH.	A208	M304
VAV-A210	A-20	VAV Size A (6)	MECH.	A208	M304
VAV-A216	A-150	VAV Size A (6)	MECH.	A208	M304

- WSHP MECHANICAL A103 A108 A203 A208				
TAG	WSHP TYPE	SPACE NAME	SPACE NUMBER	SHEET
WSHP-A100A	E-1100	MECH.	A103	M304
WSHP-A101	E-1000	MECH.	A103	M304
WSHP-A102	E-1100	MECH.	A103	M304
WSHP-A104	E-1100	MECH.	A103	M304
WSHP-A105	E-1000	MECH.	A103	M304
WSHP-A119	E-1100	MECH.	A103	M304
WSHP-A100B	E-1100	MECH.	A108	M304
WSHP-A106	E-1000	MECH.	A108	M304
WSHP-A107	E-1100	MECH.	A108	M304
WSHP-A109	E-1100	MECH.	A108	M304
WSHP-A110	A-100	MECH.	A108	M304
WSHP-A117	C-600	MECH.	A108	M304
WSHP-A200A	E-1100	MECH.	A203	M304
WSHP-A201	E-1000	MECH.	A203	M304
WSHP-A202	E-1100	MECH.	A203	M304
WSHP-A204	E-1100	MECH.	A203	M304
WSHP-A205	E-1000	MECH.	A203	M304
WSHP-A218	C-600	MECH.	A203	M304
WSHP-A200B	E-1100	MECH.	A208	M304
WSHP-A206	E-1000	MECH.	A208	M304
WSHP-A207	E-1100	MECH.	A208	M304
WSHP-A209	E-1100	MECH.	A208	M304
WSHP-A210	A-100	MECH.	A208	M304
WSHP-A216	B-375	MECH.	A208	M304

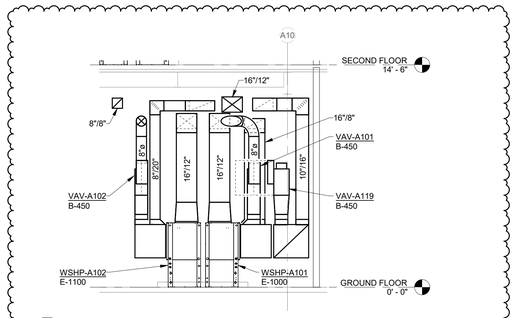

5 MECH A103 SECTION - MECHANICAL

SCALE: 1/4" = 1'-0"

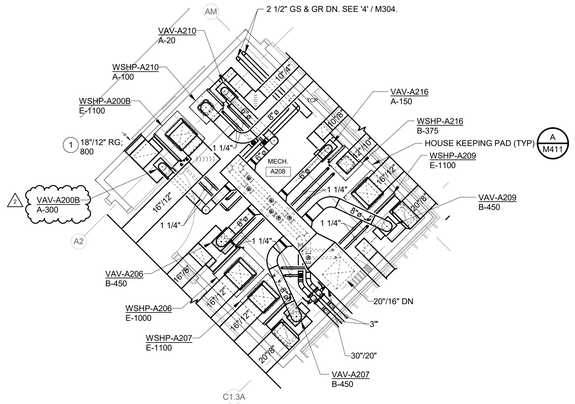

3 ENLARGED MECH A208 - MECHANICAL

SCALE: 1/4" = 1'-0"

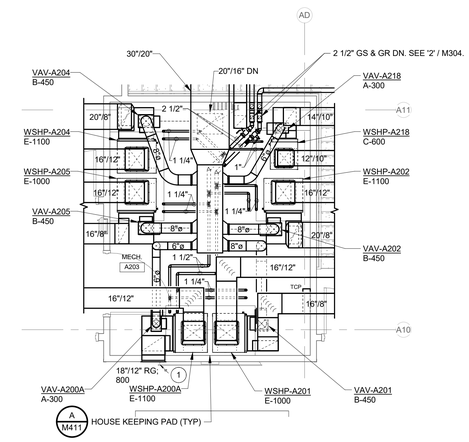

1 ENLARGED MECH A203 - MECHANICAL

SCALE: 1/4" = 1'-0"

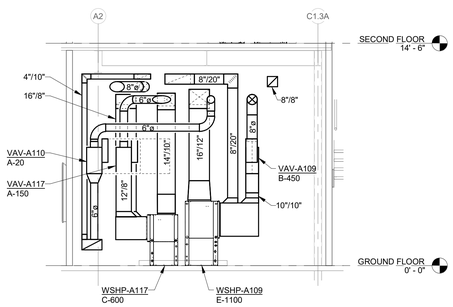

6 MECH A108 SECTION - MECHANICAL

SCALE: 1/4" = 1'-0"

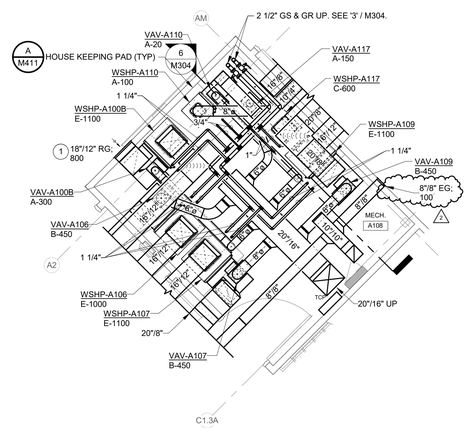

4 ENLARGED MECH A108 - MECHANICAL

SCALE: 1/4" = 1'-0"

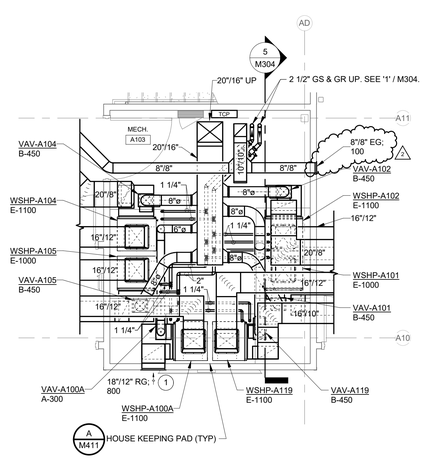

2 ENLARGED MECH A103 - MECHANICAL

SCALE: 1/4" = 1'-0"

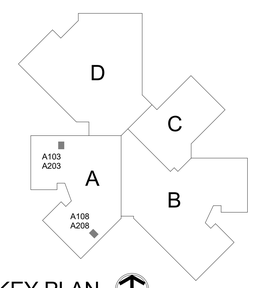

0 1 2 3 4 8 12 16

1 2 3 4

KEY PLAN

NORTH

BCSC TOGETHER WE LEARN

CSO

8831 Keystone Crossing, Indianapolis, IN 46240
317.848.7800 | csoinc.net

© 2018 CSO Architects, Inc. All Rights Reserved

Höweler+Yoon Architecture
617.517.4101 howeleryoon.com

D&A #24063

R.E. Dimond and Associates, Inc.
Consulting Engineers

732 North Capitol Avenue
Indianapolis, IN 46204
Phone: (317) 634-4672
Fax: (317) 638-8725

PROJECT:

BARTHOLOMEW CONSOLIDATED SCHOOL CORPORATION

MAPLE GROVE ELEMENTARY

TIPTON LAKES BLVD, COLUMBUS, IN 47201

SCOPE DRAWINGS:

These drawings indicate the general scope of the project in terms of architectural design concept, the dimensions of the building, the major architectural elements and the type of construction and finishes to be provided.

The drawings do not necessarily indicate or describe all work required for full performance and completion of the contract for the project.

On the basis of the general scope indicated or described, the trade contractors shall furnish all items required for the proper execution and completion of the work.

REVISIONS:

1	Addendum #1	06/10/2025
2	Addendum #2	06/17/2025

ISSUE DATE	DRAWN BY	CHECKED BY
05/30/2025	EJV	JMC

DRAWING TITLE:

UNIT A - ENLARGED MECHANICAL ROOMS - MECHANICAL

CERTIFIED BY:

Joseph Michael Chase
REGISTERED
No. PE11700335
STATE OF INDIANA
PROFESSIONAL ENGINEER

05/30/2025

DRAWING NUMBER

M304

PROJECT NUMBER

2024022

- VAV MECHANICAL B132 B137 B232 B237					
TAG	VAV SIZE - CFM	TYPE	SPACE NAME	SPACE NUMBER	SHEET
VAV-B100A	A-300	VAV Size A (6)	MECH.	B132	M305
VAV-B121	B-450	VAV Size B (8)	MECH.	B132	M305
VAV-B130	B-450	VAV Size B (8)	MECH.	B132	M305
VAV-B131	B-450	VAV Size B (8)	MECH.	B132	M305
VAV-B133	B-450	VAV Size B (8)	MECH.	B132	M305
VAV-B134	B-450	VAV Size B (8)	MECH.	B132	M305
VAV-B100B	A-300	VAV Size A (6)	MECH.	B137	M305
VAV-B128	A-50	VAV Size A (6)	MECH.	B137	M305
VAV-B135	B-450	VAV Size B (8)	MECH.	B137	M305
VAV-B136	B-450	VAV Size B (8)	MECH.	B137	M305
VAV-B138	B-450	VAV Size B (8)	MECH.	B137	M305
VAV-B139	A-20	VAV Size A (6)	MECH.	B137	M305
VAV-B200A	A-300	VAV Size A (6)	MECH.	B232	M305
VAV-B230	B-450	VAV Size B (8)	MECH.	B232	M305
VAV-B231	B-450	VAV Size B (8)	MECH.	B232	M305
VAV-B233	B-450	VAV Size B (8)	MECH.	B232	M305
VAV-B234	B-450	VAV Size B (8)	MECH.	B232	M305
VAV-B200B	A-300	VAV Size A (6)	MECH.	B237	M305
VAV-B223	A-150	VAV Size A (6)	MECH.	B237	M305
VAV-B235	B-450	VAV Size B (8)	MECH.	B237	M305
VAV-B236	B-450	VAV Size B (8)	MECH.	B237	M305
VAV-B238	B-450	VAV Size B (8)	MECH.	B237	M305
VAV-B239	A-20	VAV Size A (6)	MECH.	B237	M305

- WSHP MECHANICAL B132 B137 B232 B237					
TAG	WSHP TYPE	SPACE NAME	SPACE NUMBER	SHEET	
WSHP-B100A	E-1100	MECH.	B132	M305	
WSHP-B121	E-1200	MECH.	B132	M305	
WSHP-B130	E-1000	MECH.	B132	M305	
WSHP-B131	E-1100	MECH.	B132	M305	
WSHP-B133	E-1100	MECH.	B132	M305	
WSHP-B134	E-1000	MECH.	B132	M305	
WSHP-B100B	E-1100	MECH.	B137	M305	
WSHP-B128	A-200	MECH.	B137	M305	
WSHP-B135	E-1000	MECH.	B137	M305	
WSHP-B136	E-1100	MECH.	B137	M305	
WSHP-B138	E-1100	MECH.	B137	M305	
WSHP-B139	A-100	MECH.	B137	M305	
WSHP-B200A	E-1100	MECH.	B232	M305	
WSHP-B230	E-1000	MECH.	B232	M305	
WSHP-B231	E-1100	MECH.	B232	M305	
WSHP-B233	E-1100	MECH.	B232	M305	
WSHP-B234	E-1000	MECH.	B232	M305	
WSHP-B200B	E-1100	MECH.	B237	M305	
WSHP-B223	C-600	MECH.	B237	M305	
WSHP-B235	E-1000	MECH.	B237	M305	
WSHP-B236	E-1100	MECH.	B237	M305	
WSHP-B238	E-1100	MECH.	B237	M305	
WSHP-B239	A-100	MECH.	B237	M305	

GENERAL NOTES:

1. SEE M301 FOR ADDITIONAL GENERAL NOTES.

PLAN NOTES:

1. GRILLES TO BE PRIME COAT FINISHED FOR FIELD PAINTING.

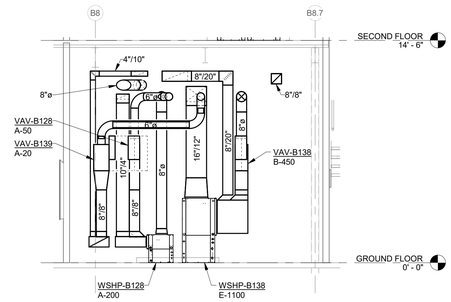

5 MECH B137 SECTION - MECHANICAL

SCALE: 1/4" = 1'-0"

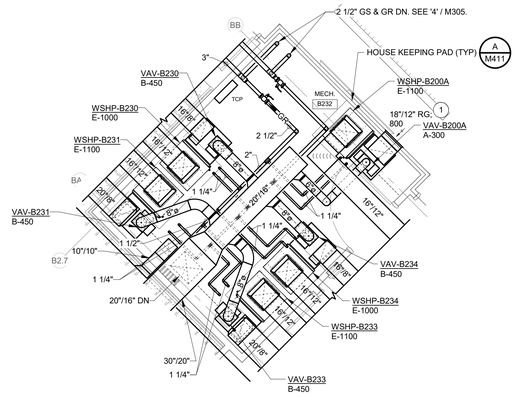

3 ENLARGED MECH B232 - MECHANICAL

SCALE: 1/4" = 1'-0"

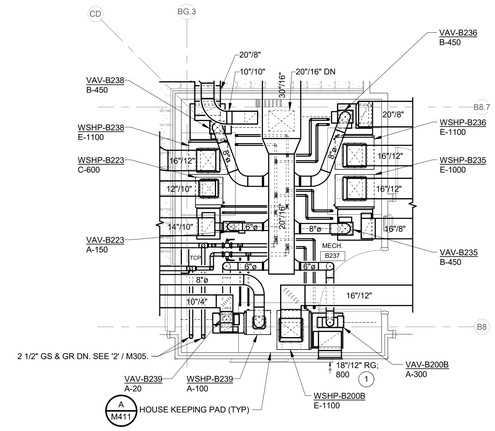

1 ENLARGED MECH B237 - MECHANICAL

SCALE: 1/4" = 1'-0"

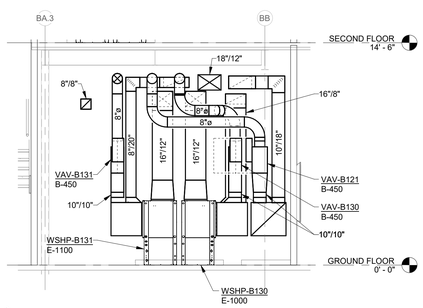

6 MECH B132 SECTION - MECHANICAL

SCALE: 1/4" = 1'-0"

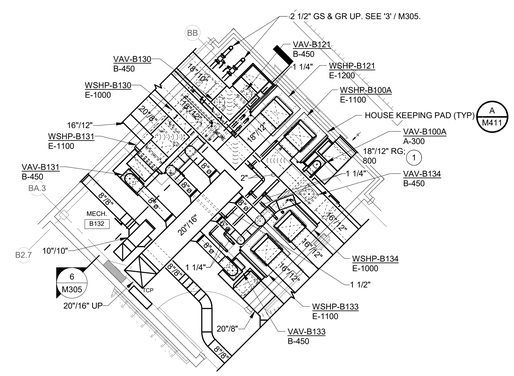

4 ENLARGED MECH B132 - MECHANICAL

SCALE: 1/4" = 1'-0"

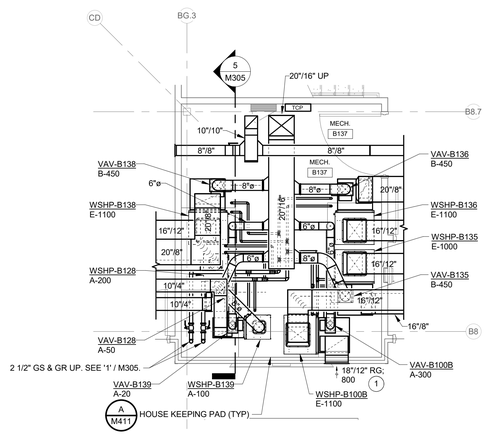

2 ENLARGED MECH B137 - MECHANICAL

SCALE: 1/4" = 1'-0"

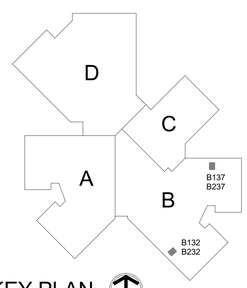

KEY PLAN

NORTH

BCSC TOGETHER WE LEARN

CSO
8831 Keystone Crossing, Indianapolis, IN 46240
317.848.7800 | csoinc.net

© 2018 CSO Architects, Inc. All Rights Reserved

Höweler+Yoon Architecture
617.517.4101 howeleryoon.com

D&A #24063

R.E. Dimond and Associates, Inc.
Consulting Engineers
732 North Capitol Avenue
Indianapolis, IN 46204
Phone: (317) 634-4672
Fax: (317) 638-8725

PROJECT:
BARTHOLOMEW CONSOLIDATED SCHOOL CORPORATION
MAPLE GROVE ELEMENTARY
TIPTON LAKES BLVD, COLUMBUS, IN 47201

SCOPE DRAWINGS:
These drawings indicate the general scope of the project in terms of architectural design concept, the dimensions of the building, the major architectural elements and the type of construction and finish materials to be used.
The drawings do not necessarily indicate or describe all work required for full performance and completion of the requirements of the Contract.
Within the limits of the general scope indicated or described, the trade contractor shall furnish all items required for the proper execution and completion of the work.

REVISIONS:

1	Addendum #1	06/10/2025
2	Addendum #2	06/17/2025

ISSUE DATE	DRAWN BY	CHECKED BY
05/30/2025	EJV	JMC

DRAWING TITLE:
UNIT B - ENLARGED MECHANICAL ROOMS - MECHANICAL

CERTIFIED BY:
Joseph Michael Chaney
REGISTERED
No. PE11700335
STATE OF INDIANA
PROFESSIONAL ENGINEER
05/30/2025

DRAWING NUMBER
M305

PROJECT NUMBER
2024022

GENERAL NOTES:

1. SEE M301 FOR ADDITIONAL GENERAL NOTES.

PLAN NOTES:

1. NOT USED.

- VAV MECHANICAL C149 AND C225					
TAG	VAV SIZE - CFM	TYPE	SPACE NAME	SPACE NUMBER	SHEET
VAV-C143	A-50	VAV Size A (6)	MECH.	C149	M306
VAV-C144	A-50	VAV Size A (6)	MECH.	C149	M306
VAV-C146	A-150	VAV Size A (6)	MECH.	C149	M306
VAV-C153	A-40	VAV Size A (6)	MECH.	C149	M306
VAV-C156	A-40	VAV Size A (6)	MECH.	C149	M306
VAV-C159	A-20	VAV Size A (6)	MECH.	C149	M306
VAV-C165	B-380	VAV Size B (8)	MECH.	C149	M306
VAV-C168	A-80	VAV Size A (6)	MECH.	C149	M306
VAV-C140	B-400	VAV Size B (8)	MECHANICAL ROOM	C225	M306
VAV-C145	A-40	VAV Size A (6)	MECHANICAL ROOM	C225	M306
VAV-C151	A-60	VAV Size A (6)	MECHANICAL ROOM	C225	M306
VAV-C152	A-20	VAV Size A (6)	MECHANICAL ROOM	C225	M306

- WSHP MECHANICAL C149 AND C225				
TAG	WSHP TYPE	SPACE NAME	SPACE NUMBER	SHEET
WSHP-C143	B-400	MECH.	C149	M306
WSHP-C144	B-400	MECH.	C149	M306
WSHP-C146	C-650	MECH.	C149	M306
WSHP-C153	B-400	MECH.	C149	M306
WSHP-C156	B-400	MECH.	C149	M306
WSHP-C159	A-300	MECH.	C149	M306
WSHP-C165	E-1200	MECH.	C149	M306
WSHP-C168	E-1250	MECH.	C149	M306
WSHP-C140	F-1650	MECHANICAL ROOM	C225	M306
WSHP-C145	A-300	MECHANICAL ROOM	C225	M306
WSHP-C151	C-600	MECHANICAL ROOM	C225	M306
WSHP-C152	A-300	MECHANICAL ROOM	C225	M306

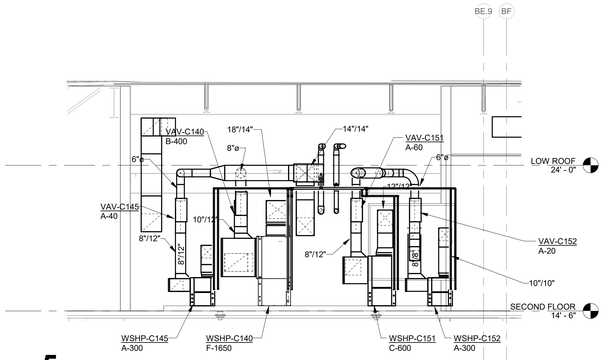

5 MECHANICAL C225 SECTION - MECHANICAL

SCALE: 1/4" = 1'-0"

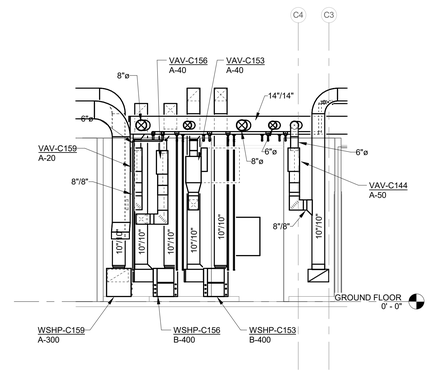

4 MECH C149 SECTION - MECHANICAL

SCALE: 1/4" = 1'-0"

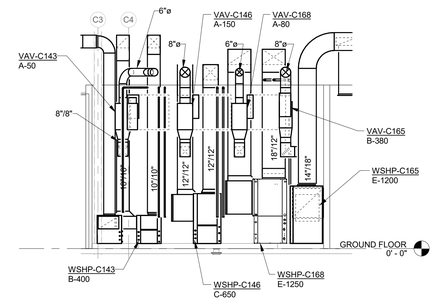

3 MECH C149 SECTION - MECHANICAL

SCALE: 1/4" = 1'-0"

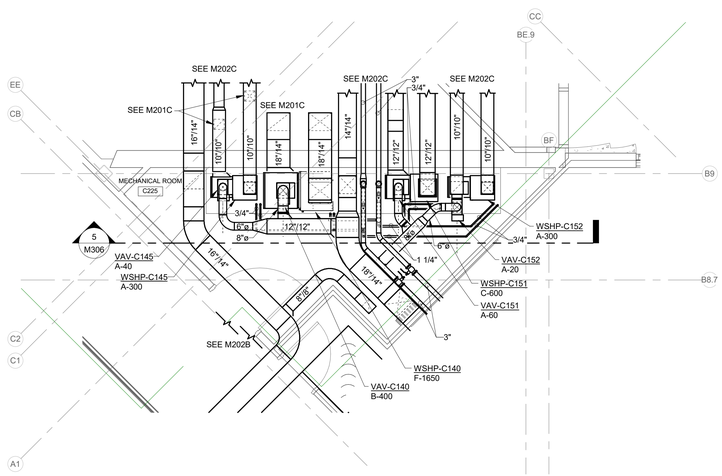

2 ENLARGED MECH C225 - MECHANICAL

SCALE: 1/4" = 1'-0"

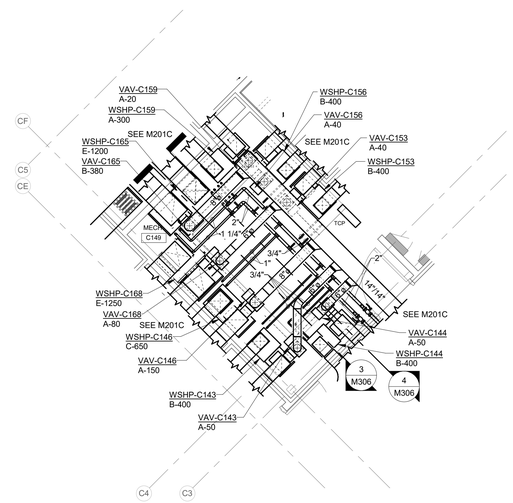

1 ENLARGED MECH C149 - MECHANICAL

SCALE: 1/4" = 1'-0"

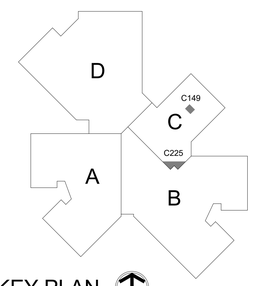

0 1 2 3 4 8 12 16

1 2 3 4

KEY PLAN

NORTH

BCSC TOGETHER WE LEARN

CSO

8831 Keystone Crossing, Indianapolis, IN 46240
317.848.7800 | csoinc.net

© 2018 CSO Architects, Inc. All Rights Reserved

Höweler+Yoon Architecture
617.517.4101 howeleryoon.com

D&A #24063

R.E. Dimond and Associates, Inc.
Consulting Engineers

732 North Capitol Avenue
Indianapolis, IN 46204
Phone: (317) 634-4672
Fax: (317) 638-8725

PROJECT:

BARTHOLOMEW CONSOLIDATED SCHOOL CORPORATION
MAPLE GROVE ELEMENTARY
TIPTON LAKES BLVD, COLUMBUS, IN 47201

SCOPE DRAWINGS:

These drawings indicate the general scope of the project in terms of architectural design concept, the dimensions of the building, the major architectural elements and the type of construction and exterior appearance of the building.

The drawings do not necessarily indicate or describe all work required for full performance and completion of the Contract Work of the Contract.

Unless the basis of the general scope indicated or described, the trades and subcontractors shall furnish all items required for the proper execution and completion of the work.

REVISIONS:

2	Addendum #2	06/17/2025

ISSUE DATE	DRAWN BY	CHECKED BY
05/30/2025	EJV	JMC

DRAWING TITLE:

UNIT C - ENLARGED MECHANICAL ROOMS - MECHANICAL

CERTIFIED BY:

Joseph Michael Chaney
REGISTERED
No. PE11700335
STATE OF INDIANA
PROFESSIONAL ENGINEER

05/30/2025

DRAWING NUMBER

M306 △2

PROJECT NUMBER

2024022

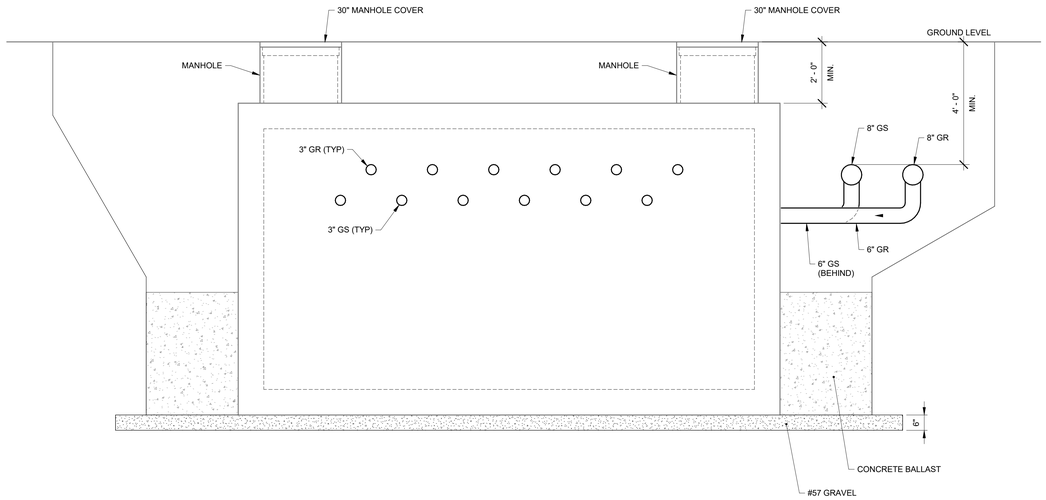

C CROSS SECTION VIEW B-B

SCALE: NONE

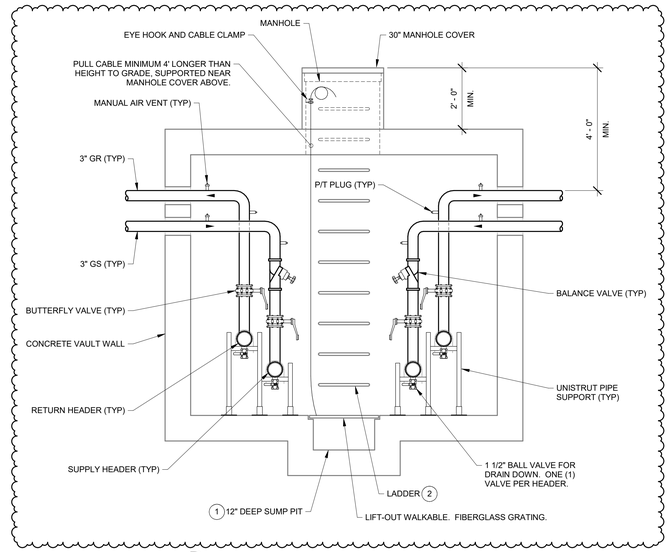

B CROSS SECTION VIEW A-A

SCALE: NONE

GENERAL NOTES:

1. CONCRETE VALVE VAULT MANUFACTURER / LOOP CONTRACTOR TO PROVIDE FINAL DIMENSIONS OF VAULT.
2. FLOOR OF VAULT TO SLOPE TOWARDS SUMP PUMP RECESS.
3. ALL PIPE AND CONDUIT PENETRATIONS THROUGH CONRETE VAULT WALLS TO BE SEALED WITH MECHANICAL LINK SEALS. SEE SPECIFICATIONS.
4. LADDER FOR VAULT ACCESS IS ONLY REQUIRED ON ONE (1) END OF VAULT.
5. ALL BARE METAL WITHIN VAULT SHALL BE FACTORY COATED OR FIELD PAINTED TO PREVENT RUSTING.
6. SEE ELECTRICAL AND PLUMBING DRAWINGS FOR ADDTIONAL VAULT COMPONENTS.
7. DETAILS SHOWN ARE TYPICAL FOR VALVE VAULT #1. VALVE VAULT #2 IS SIMILAR.

PLAN NOTES:

1. PROVIDE 12" DEEP RECESS FOR SUMP PIT. SUMP PIT TO HAVE LIFT-OUT GRATING WITH PULL CABLE THAT IS ACCESSIBLE FROM THE MANHOLE OPENING. SUMP PIT TO BE DESIGNED SO THAT A PORTABLE SUMP PUMP CAN BE LOWERED INTO THE PIT FROM GRADE THROUGH THE MANHOLE OPENING.
2. HOT-DIPPED GALVANIZED STEEL RUNG LADDER EMBEDDED IN CONCRETE VALVE VAULT WALL.

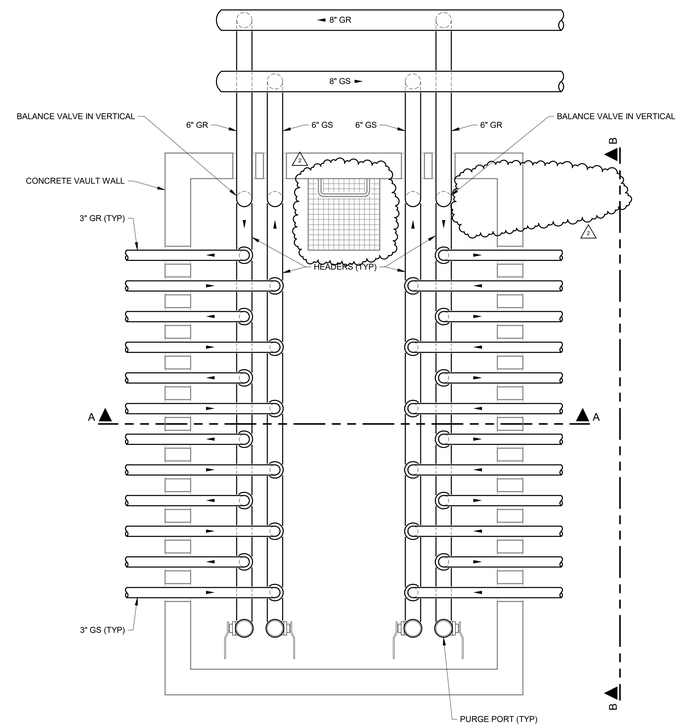

A UNDERGROUND GS & GR VALVE VAULT - PLAN VIEW

SCALE: NONE

BCSC TOGETHER WE LEARN

CSO
8831 Keystone Crossing, Indianapolis, IN 46240
317.848.7800 | csoinc.net

© 2018 CSO Architects, Inc. All Rights Reserved

Höweler+Yoon Architecture
617.517.4101 howeleryoon.com

D&A #24063

R.E. Dimond and Associates, Inc.
Consulting Engineers
732 North Capitol Avenue
Indianapolis, IN 46204
Phone: (317) 634-4672
Fax: (317) 638-8725

PROJECT:
BARTHOLOMEW CONSOLIDATED SCHOOL CORPORATION
MAPLE GROVE ELEMENTARY
TIPTON LAKES BLVD, COLUMBUS, IN 47201

SCOPE DRAWINGS:
These drawings indicate the general scope of the project in terms of architectural design concept, the dimensions of the building, the major architectural elements and the type of structural, mechanical and electrical systems.
The drawings do not necessarily indicate or describe all work required for full performance and completion of the requirements of the Contract.
On the basis of the general scope indicated or described, the trade contractors shall furnish all items required for the proper execution and completion of the work.

REVISIONS:

2	Addendum #2	06/17/2025

ISSUE DATE	DRAWN BY	CHECKED BY
05/30/2025	JMC	JMC

DRAWING TITLE:
DETAILS - VALVE VAULTS

CERTIFIED BY:
Joseph Michael Chrapla
REGISTERED
No. PE11700335
STATE OF INDIANA
PROFESSIONAL ENGINEER
06/30/2025

DRAWING NUMBER
M412

PROJECT NUMBER
2024022

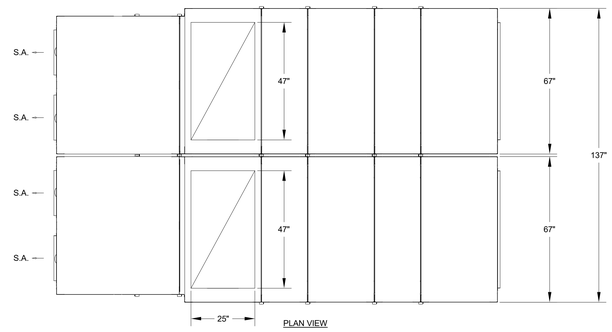

PLAN VIEW

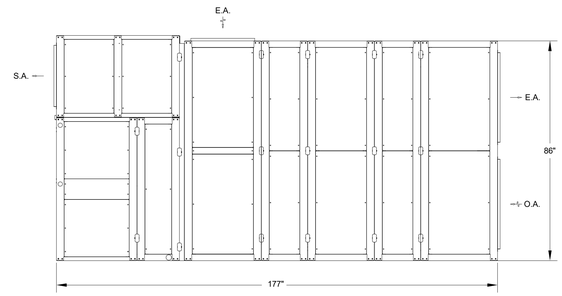

ELEVATION VIEW

A ERV-A & ERV-B PROFILE

SCALE: NONE

2

BCSC
TOGETHER WE LEARN

CSO

8831 Keystone Crossing, Indianapolis, IN 46240
317.848.7800 | csoinc.net

© 2018 CSO Architects, Inc. All Rights Reserved

Höweler+Yoon Architecture
617.517.4101 howeleryoon.com

D&A #24063

R.E. Dimond and Associates, Inc.
Consulting Engineers

732 North Capitol Avenue
Indianapolis, IN 46204
Phone: (317) 634-4672
Fax: (317) 638-8725

PROJECT:

BARTHOLOMEW CONSOLIDATED SCHOOL CORPORATION
MAPLE GROVE ELEMENTARY
TIPTON LAKES BLVD, COLUMBUS, IN 47201

SCOPE DRAWINGS:

These drawings indicate the general scope of the project in terms of architectural design concept, the dimensions of the building, the major architectural elements and the type of structural, mechanical and electrical systems.

The drawings do not necessarily indicate or describe all work required for full performance and completion of the requirements of the Contract.

On the basis of the general scope indicated or described, the trade contractors shall furnish all items required for the proper execution and completion of the work.

REVISIONS:

2	Addendum #2	06/17/2025

ISSUE DATE	DRAWN BY	CHECKED BY
05/30/2025	JMC	JMC

DRAWING TITLE:

ERV PROFILES - MECHANICAL

CERTIFIED BY:

Joseph Michael Chapla
REGISTERED
No. PE11700335
STATE OF INDIANA
PROFESSIONAL ENGINEER

05/30/2025

DRAWING NUMBER

M415

PROJECT NUMBER

2024022

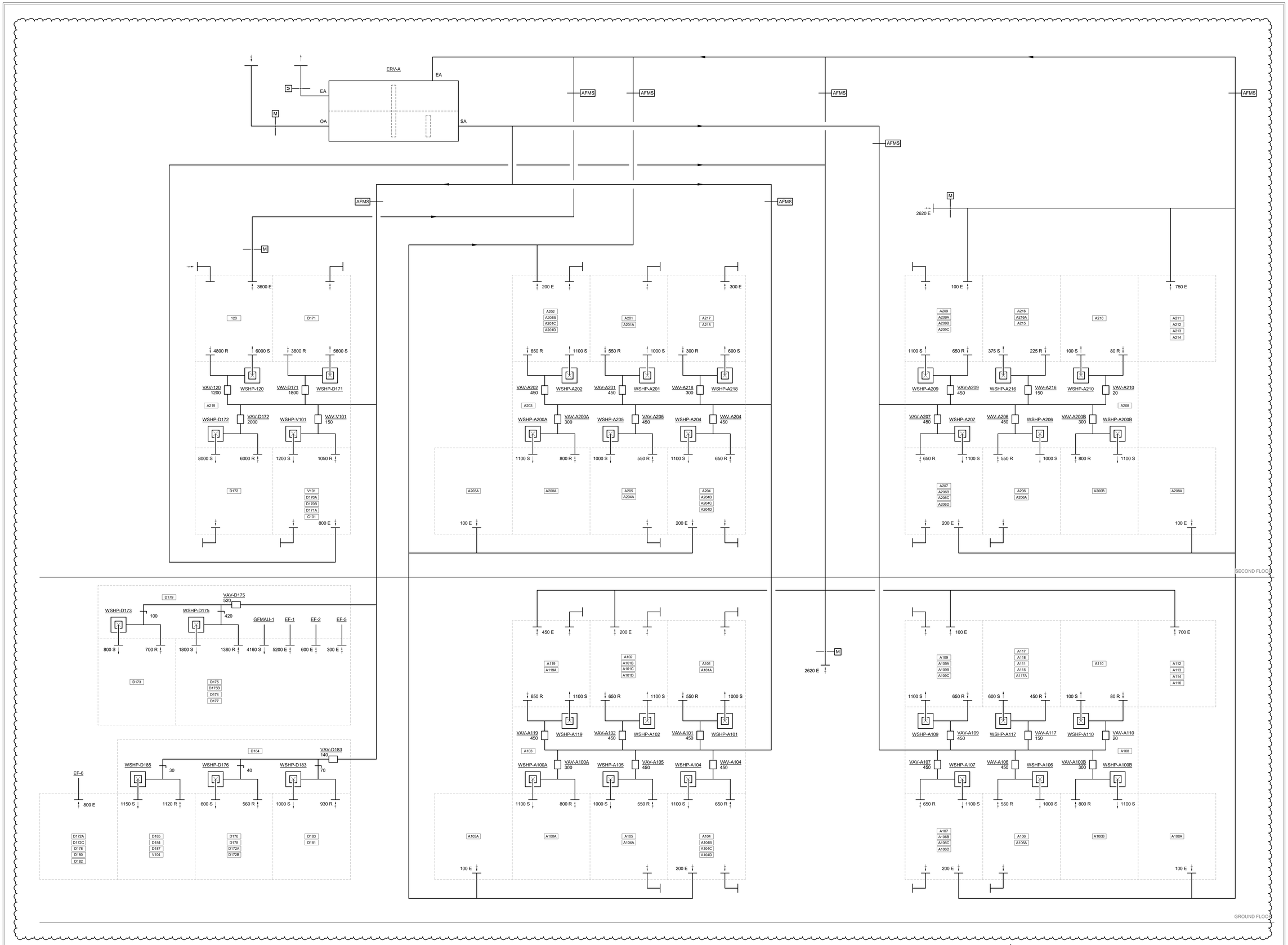

ERV-A AIRFLOW SCHEMATIC

BCSC TOGETHER WE LEARN

CSO
8831 Keystone Crossing, Indianapolis, IN 46240
317.848.7800 | csoinc.net

© 2018 CSO Architects, Inc. All Rights Reserved

Höweler+Yoon Architecture
617.517.4101 howeleryoon.com

D&A #24063

R.E. Dimond and Associates, Inc.
Consulting Engineers
732 North Capitol Avenue
Indianapolis, IN 46204
Phone: (317) 634-4672
Fax: (317) 638-8725

PROJECT:
BARTHOLOMEW CONSOLIDATED SCHOOL CORPORATION
MAPLE GROVE ELEMENTARY
TIPTON LAKES BLVD, COLUMBUS, IN 47201

SCOPE DRAWINGS:
These drawings indicate the general scope of the project in terms of architectural design concept, the dimensions of the building, the major architectural elements and the type of structural, mechanical and electrical systems.
The drawings do not necessarily indicate or describe all work required for full performance and completion of the requirements of the Contract.
On the basis of the general scope indicated or described, the trade contractors shall furnish all items required for the proper execution and completion of the work.

REVISIONS:

2	Addendum #2	06/17/2025

ISSUE DATE	DRAWN BY	CHECKED BY
05/30/2025	JMC	JMC

DRAWING TITLE:
SCHEMATICS - ERV-A - AIR DISTRIBUTION

CERTIFIED BY:
Joseph Michael Chrapla
REGISTERED
No. PE11700335
STATE OF INDIANA
PROFESSIONAL ENGINEER
06/30/2025

DRAWING NUMBER
M501

PROJECT NUMBER
2024022

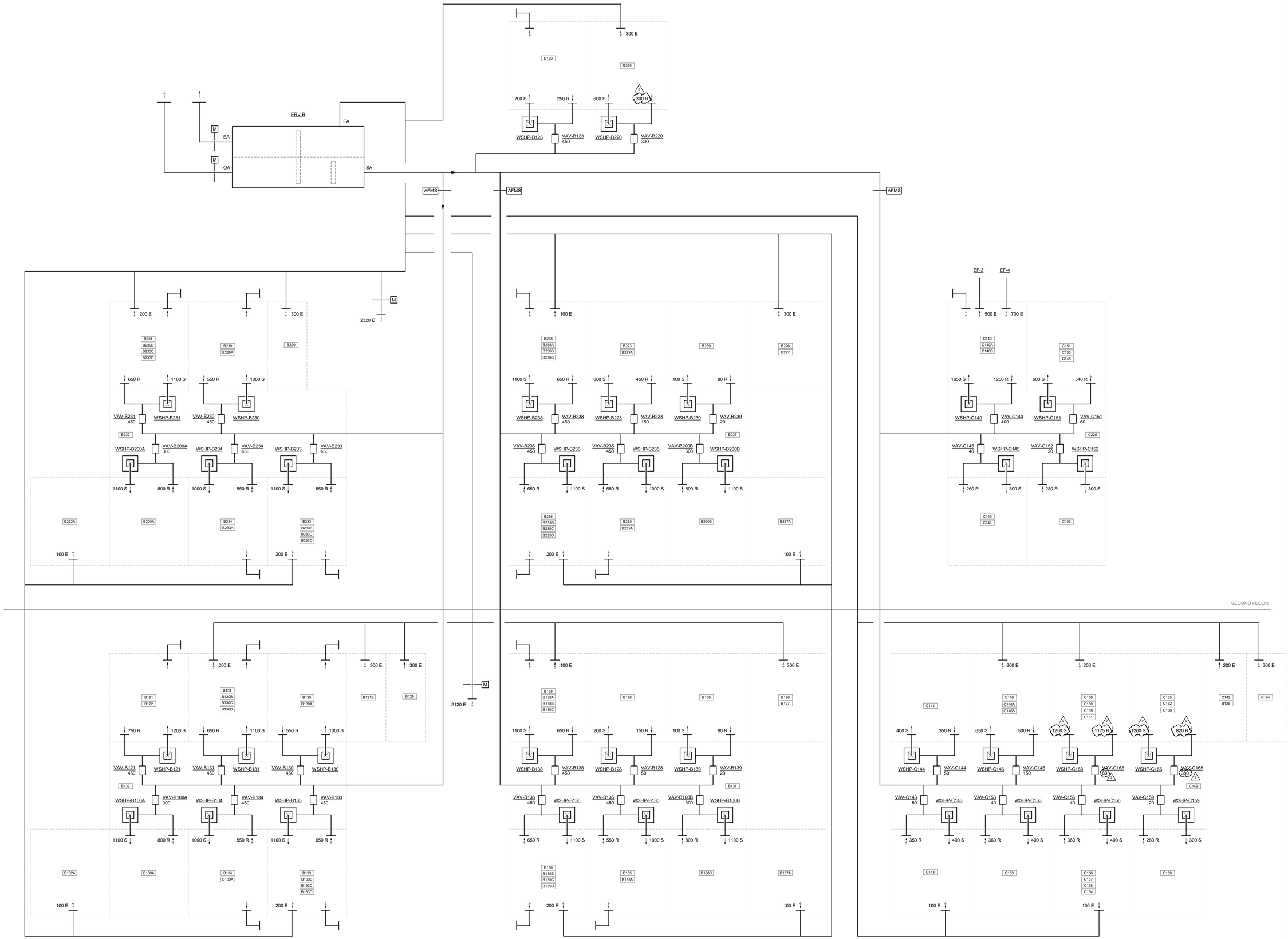

ERV-B AIRFLOW SCHEMATIC

BCSC TOGETHER WE LEARN

CSO
8831 Keystone Crossing, Indianapolis, IN 46240
317.848.7800 | csoinc.net

© 2018 CSO Architects, Inc. All Rights Reserved

Howeler+Yoon Architecture
617.517.4101 howeleryoon.com

D&A #24063

R.E. Dimond and Associates, Inc.
Consulting Engineers
732 North Capitol Avenue
Indianapolis, IN 46204
Phone: (317) 634-4672
Fax: (317) 638-8725

PROJECT:
BARTHOLOMEW CONSOLIDATED SCHOOL CORPORATION
MAPLE GROVE ELEMENTARY
TIPTON LAKES BLVD, COLUMBUS, IN 47201

SCOPE DRAWINGS:
These drawings indicate the general scope of the project in terms of architectural design concept, the dimensions of the building, the major architectural elements and the type of construction and mechanical and electrical systems.
The drawings do not necessarily indicate or describe all work required for full performance and completion of the requirements of the Contract.
On the basis of the general scope indicated or described, the trades shall furnish all materials or items required for the proper execution and completion of the work.

REVISIONS:

2	Addendum #2	06/17/2025

ISSUE DATE	DRAWN BY	CHECKED BY
05/30/2025	JMC	JMC

DRAWING TITLE:
SCHEMATICS - ERV-B - AIR DISTRIBUTION

CERTIFIED BY:
Joseph Michael Chaney
REGISTERED
No. PE11700335
STATE OF INDIANA
PROFESSIONAL ENGINEER
05/30/2025

DRAWING NUMBER
M502

PROJECT NUMBER
2024022

ELECTRIC UNIT HEATER SCHEDULE

MARK NO	DRAWING NAME &/OR PURPOSE	SPECIFICATION			MANUFACTERER & MODEL NO	ELECTRICAL DATA			LENGTH	HEIGHT	DEPTH	INSTALLED HEIGHT	STYLE	WEIGHT (LBS)	REMARKS
		SECTION	NAME	EQUIPMENT TYPE		WATTS	VOLTS	PHASE							
ECUH-A	VESTIBULE HEAT	23 82 39.19	WALL AND CEILING UNIT HEATERS - ELECTRIC	CABINET UNIT HEATERS - ELECTRIC	MARKEL 6300 SERIES	3,000	480	3	33"	25"	9"	36"	WALL-MOUNTED, FULLY RECESSED	100	PROVIDE WITH RECESSED TRIM KIT, BUILT-IN DOUBLE POLE THERMOSTAT, DISCONNECT SWITCH & SUMMER FAN SWITCH. FRONT INLET & FRONT OUTLET. COLOR TO BE SELECTED BY ARCHITECT.
ECUH-B	VESTIBULE HEAT	23 82 39.19	WALL AND CEILING UNIT HEATERS - ELECTRIC	CABINET UNIT HEATERS - ELECTRIC	MARKEL 6300 SERIES	6,000	480	3	46"	25"	9"	36"	WALL-MOUNTED, FULLY RECESSED	130	PROVIDE WITH RECESSED TRIM KIT, BUILT-IN DOUBLE POLE THERMOSTAT, DISCONNECT SWITCH & SUMMER FAN SWITCH. FRONT INLET & FRONT OUTLET. COLOR TO BE SELECTED BY ARCHITECT.
ECUH-C	VESTIBULE HEAT	23 82 39.19	WALL AND CEILING UNIT HEATERS - ELECTRIC	CABINET UNIT HEATERS - ELECTRIC	MARKEL 6300 SERIES	3,000	480	3	33"	25"	9"	-	CEILING-MOUNTED, FULLY RECESSED	100	PROVIDE WITH RECESSED TRIM KIT, BUILT-IN DOUBLE POLE THERMOSTAT, DISCONNECT SWITCH & SUMMER FAN SWITCH. FRONT INLET & FRONT OUTLET. COLOR TO BE SELECTED BY ARCHITECT.
EPUH-A	MECHANICAL ROOM HEAT	23 82 39.19	WALL AND CEILING UNIT HEATERS - ELECTRIC	PROPELLER UNIT HEATERS - ELECTRIC	MARKEL 5100 SERIES	10,000	480	3	21 1/2"	24 5/16"	6 1/2"	10'	SUSPENDED	60	PROVIDE WITH MOUNTING BRACKET, WALL-MOUNTED LINE VOLTAGE THERMOSTAT WITH DISCONNECT SWITCH.
EPUH-B	MECHANICAL ROOM HEAT	23 82 39.19	WALL AND CEILING UNIT HEATERS - ELECTRIC	PROPELLER UNIT HEATERS - ELECTRIC	MARKEL 5100 SERIES	5,000	480	3	14 15/32"	17 3/4"	6 1/2"	9'	SUSPENDED	30	PROVIDE WITH MOUNTING BRACKET, WALL-MOUNTED LINE VOLTAGE THERMOSTAT WITH DISCONNECT SWITCH.

2

TRENCHED FAN COIL SCHEDULE

MARK NO	DRAWING NAME &/OR PURPOSE	SPECIFICATION			MANUFACTURER & MODEL NO	FAN		ELECTRIC HEATING COIL			ELECTRICAL DATA				REMARKS
		SECTION	NAME	EQUIPMENT TYPE		CFM	ESP	KW	EAT	LAT	VOLTS	PHASE	MCA	MOCP	
TFC-A	PERIMETER HEAT		TRENCHED FAN COIL - ELECTRIC	TRENCHED FAN COIL - ELECTRIC	AIRFIXTURE SOHO-E 06-077	250	-	2.0	60.0		120	1	20.8	25	77" LONG, FULL FLANGE FRAME, EXTRUDED ALUMINUM GRILLE & REMOTE THERMOSTAT. GRILLE FINISH TO BE SELECTED BY ARCHITECT. RECESSED TRENCH INSTALLATION IN CONCRETE FLOOR SLAB.
TFC-B	PERIMETER HEAT		TRENCHED FAN COIL - ELECTRIC	TRENCHED FAN COIL - ELECTRIC	AIRFIXTURE SOHO-E 06-077	250	-	2.0	60.0		120	1	20.8	25	77" LONG, FLANGELESS FRAME, EXTRUDED ALUMINUM GRILLE & REMOTE THERMOSTAT. GRILLE FINISH TO BE SELECTED BY ARCHITECT. WALL-MOUNTED INSTALLATION WITH DOWNWARD DISCHARGE.

EXPANSION TANK SCHEDULE

MARK NO	DRAWING NAME &/OR PURPOSE	SPECIFICATION			MANUFACTURER & MODEL NO	WEIGHT (LBS) WET	APPROXIMATE SYSTEM VOLUME (GAL)	TANK VOLUME (GAL)	MIN ACCEPTANCE VOLUME (GAL)	REMARKS
		SECTION	NAME	EQUIPMENT TYPE						
ET-GL	GROUND LOOP SYSTEM	23 21 13	HYDRONIC PIPING SYSTEMS	EXPANSION TANK	BELL & GOSSETT B2500	6,942	12,000	660	168	48" DIAMETER, 104" TALL, 25% PROPYLENE GLYCOL, 2" SYSTEM CONNECTION, ASME RATED.

AIR & DIRT SEPARATOR SCHEDULE

MARK NO	DRAWING NAME &/OR PURPOSE	SPECIFICATION			MANUFACTURER & MODEL NO	WEIGHT (LBS) DRY	PIPE SIZE (IN)	PIPE SIZE TO TANK (IN NPT)	MAX WPD (FT)	STRAINER REQUIRED	REMARKS
		SECTION	NAME	EQUIPMENT TYPE							
AS-GL	GROUND LOOP SYSTEM	23 21 13	HYDRONIC PIPING SYSTEMS	AIR AND DIRT SEPARATORS	SPIROTHERM VHN600FA	-	6	-	5.0	INTEGRAL	FLANGED CONNECTIONS AND SKIM VALVE.

MISCELLANEOUS EQUIPMENT SCHEDULE

MARK NO.	DRAWING NAME &/OR PURPOSE	SPECIFICATION			MANUFACTURER & MODEL NO	ELECTRICAL DATA			WEIGHT (LBS.)	REMARKS
		SECTION	NAME	EQUIPMENT TYPE		HP	VOLTS	PHASE		
FF-GL	GROUND LOOP FILTER FEEDER	23 25 00	HVAC WATER TREATMENT	FILTER FEEDER	NEPTUNE FTF-5DB	-	-	-	-	5 GALLON, 300 PSIG RATING, VERTICAL STYLE WITH DISH BOTTOM, LEG STANDS AND 3/4" INLET, OUTLETS AND DRAIN.
GMU-GL	GROUND LOOP GLYCOL MAKE-UP	23 25 00	HVAC WATER TREATMENT	GLYCOL MAKE-UP UNIT	BELL & GOSSETT GMU-30	1/2	120	1	200	10 GPM AT 30 PSI, 3600 RPM, 55 GALLON TANK MIN., LOW LEVEL CUTOFF ALARM CONTACT TO BE MONITORED BY T.C.C.

BCSC TOGETHER WE LEARN

CSO
8831 Keystone Crossing, Indianapolis, IN 46240
317.848.7800 | csoinc.net

© 2018 CSO Architects, Inc. All Rights Reserved

Höweler+Yoon Architecture
617.517.4101 howeleryoon.com

D&A #24063

R.E. Dimond and Associates, Inc.
Consulting Engineers
732 North Capitol Avenue
Indianapolis, IN 46204
Phone: (317) 634-4672
Fax: (317) 638-8725

PROJECT:
BARTHOLOMEW CONSOLIDATED SCHOOL CORPORATION
MAPLE GROVE ELEMENTARY
TIPTON LAKES BLVD, COLUMBUS, IN 47201

SCOPE DRAWINGS:
These drawings indicate the general scope of the project in terms of architectural design concept, the dimensions of the building, the major architectural elements and the type of construction and mechanical and electrical systems.
The drawings do not necessarily indicate or describe all work required for full performance and completion of the requirements of the Contract.
Furnish on the basis of the general scope indicated or described, the best commercial practice to maintain all items required for the proper execution and completion of the work.

REVISIONS:

2	Addendum #2	06/17/2025

ISSUE DATE	DRAWN BY	CHECKED BY
05/30/2025	JMC	JMC

DRAWING TITLE:
SCHEDULES - HYDRONICS

CERTIFIED BY:
Joseph Michael Chaney
REGISTERED
No. PE11700335
STATE OF INDIANA
PROFESSIONAL ENGINEER
05/30/2025

DRAWING NUMBER
M612

PROJECT NUMBER
2024022

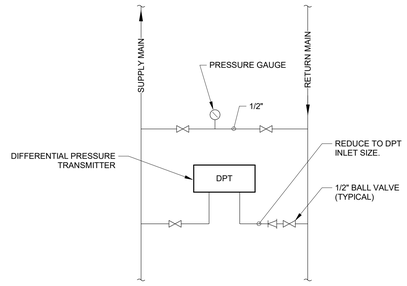

A TYPICAL DPT INSTALLATION

SCALE: NONE

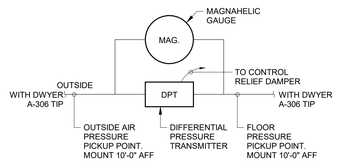

B BUILDING PRESSURIZATION CONTROL SCHEMATIC

SCALE: NONE

GENERAL NOTES - CONTROLS:

1. ALL CONTROL VALVES WILL BE ELECTRONIC/ELECTRIC ACTUATED.
2. ALL THERMOSTATS WILL BE REMOTE/READABLE. ADJUSTABLE FOR NIGHT SETBACK CAPABLITIES.
3. LISTED CONTROL POINTS ARE MINIMUM REQUIREMENTS. T.C.C. SHALL PROVIDE ADDITIONAL POINTS IF REQUIRED FOR SPECIFIED SEQUENCE OF OPERATION.
4. ALL THERMOSTATS TO BE MOUNTED AT 48" AFF TO TOP OF BACK BOX. NO WIREMOLD ALLOWED. DROP WIRE DOWN THRU CONCRETE BLOCK CORES. VERTICAL CONDUIT FOR WIRE TO THERMOSTATS NOT REQUIRED WHEN INSTALLING IN EXISTING BLOCK WALLS. CONDUITS ARE REQUIRED IN ALL OTHER WALLS. ELECTRICAL CONTRACTOR TO INSTALL CONDUIT TO ABOVE CEILING AND BACK BOX FOR ALL THERMOSTATS INSTALLED IN NEW WALLS. TEMPERATURE CONTROL CONTRACTOR TO PROVIDE COMPLETE INSTALLATION FOR ALL THERMOSTATS INSTALLED IN EXISTING WALLS.
5. THERMOSTATS SHOWN ON EQUIPMENT SHALL BE INSTALLED WITH SENSOR TO SENSE RETURN AIR TEMPERATURE.
6. COORDINATE THERMOSTAT LOCATIONS WITH ALL CASEWORK, GENERAL CONTRACTOR AND ELECTRICAL CONTRACTOR PRIOR TO WALL CONSTRUCTION.
7. TEMPERATURE CONTROL CONTRACTOR SHALL NOTIFY MECHANICAL CONTRACTOR OF ALL REQUIRED THERMOWELL LOCATIONS NEEDED IN PIPING.
8. CONTROL CONTRACTOR SHALL LOCATE ALL CONTROLLERS, RELAYS, ETC. AT AN EASILY ACCESSIBLE LOCATION IF NOT INSTALLED WITHIN EQUIPMENT CABINET.
9. NO RELAYS IN A BOX (RIB'S) ARE ALLOWED. ALL RELAYS TO BE PLUG-IN TYPE RELAYS.
10. ALL THERMOSTATS, CO2 SENSORS AND MOTION SENSORS TO HAVE STICK-ON LABELS THAT INDICATE NAME OF EQUIPMENT THAT THEY CONTROL. LABELS TO BE LOCATED DIRECTLY BELOW DEVICE. VERIFY LABEL LOCATION WITH THE ENGINEER/OWNER PRIOR TO LABELING ALL DEVICES. ALL DEVICES TO BE LABELED WITH SAME I.D.
11. ALL EXHAUST FAN ISOLATION DAMPERS SHALL BE INSULATED, LOW LEAKAGE TEMPERATURE CONTROL DAMPERS.
12. ALL CONTROL DAMPERS TO READ BACK ACTUAL ORIENTATION AND POSITION OF DAMPERS.
13. ALL OUTSIDE AIR DAMPERS SHALL FAIL CLOSED, EXCEPT FOR LIFE SAFETY DAMPERS.

GENERAL NOTES - SCHEMATICS:

1. SENSORS SHALL BE MOUNTED ON THE SIDE OF DUCTWORK WITH TOP OF SENSING PROBE CENTERED IN THE DUCT. (SAME DISTANCE FROM TOP TO BOTTOM AND SIDE TO SIDE).
2. MASTER OUTDOOR AIR TEMPERATURE SENSOR SHALL BE LOCATED ON THE NORTH FACE OF THE BUILDING.

OCCUPIED / UNOCCUPIED:

1. GLOBAL COMMANDS
   - A. SCREEN WITH TOGGLE SWITCH WILL ALLOW USER TO ASSIGN DIFFERENT ZONES AS INDEXABLE AS "STAND-ALONE" OR "GLOBAL COMMANDS."
   - B. OCCUPIED 1 — 6:00 A.M. TO 3:00 P.M.
     - a. ALL EQUIPMENT AND TERMINAL DEVICES ARE INDEXED TO OCCUPIED MODE.
   - C. STANDBY / OCCUPIED 2 — 3:00 P.M. TO 9:00 P.M.
     - a. ENABLES SPACE MOUNTED MOTION SENSORS TO INDEX TERMINAL DEVICES FROM STANDBY TO OCCUPIED MODE. WHEN MOTION SENSOR DETECTS MOTION, SPACE REMAINS IN OCCUPIED MODE FOR 120 MINUTES (ADJ) AND RESPECTIVE ERV IS INDEXED TO 100% DESIGN AIRFLOW.
   - D. UNOCCUPIED — 9:00 P.M. TO 6:00 A.M.
     - a. TERMINAL DEVICES, VAV'S AND ERV'S ARE INDEXED TO 50% DESIGN AIRFLOW.

TEMPERATURE SET POINTS:

1. PROVIDE THE FOLLOWING TEMPERATURE SET POINTS:
   - A. COOLING OCCUPIED: 72°F
   - B. HEATING OCCUPIED: 70°F
   - C. UNOCCUPIED: 60°F - 80°F.
     - a. NO ENERGY USE IF SPACE IS BETWEEN THESE SETPOINTS DURING UNOCCUPIED MODE. AS TEMPERATURE APPROACHES UNOCCUPIED HIGH OR LOW TEMPERATURE THEN SYSTEM(S) SHALL MODULATE TO MAINTAIN TEMPERATURES WITHIN UNOCCUPIED OUTER LIMITS.

GENERAL NOTES - SEQUENCES:

1. THESE SEQUENCES DEFINE THE MANNER AND METHOD BY WHICH CONTROLS FUNCTION. REQUIREMENTS FOR EACH TYPE OF CONTROL SYSTEM OPERATION ARE SPECIFIED. EQUIPMENT, DEVICES, AND SYSTEM COMPONENTS REQUIRED FOR CONTROL SYSTEMS ARE IN SPECIFICATION SECTIONS. FURNISH ALL CONTROL DEVICES AND COMPONENTS, WHETHER SPECIFIED OR NOT, TO ACCOMPLISH THE DESCRIBED SEQUENCES.
2. THE SOFTWARE WILL ENABLE USER TO AUTOMATICALLY PROGRAM LEAD-LAG OPERATION OF ALL COMMON TYPES OF EQUIPMENT. COMMON TYPES OF EQUIPMENT INCLUDE CHILLERS, COOLING TOWERS, PUMPS, BOILERS, ETC.
3. ALL FANS SHALL HAVE CURRENT SENSORS WHICH WILL BE USED FOR PROOF OF OPERATION AND TO DISPLAY AMP DRAW. SHOULD ANY EQUIPMENT FAIL, THEN THE B.A.S. SYSTEM SHALL BE ALARMED AND THE STAND-BY EQUIPMENT WILL BE ENERGIZED, IF AVAILABLE. WHERE EQUIPMENT IS CONTROLLED WITH VFD'S THEN B.A.S. SHALL READ AMP DRAW THROUGH VFD. CURRENT SENSOR SHALL HAVE ALARMS SET TO SENSE A "NON-LOADED" CONDITION AND ALERT B.M.S.
4. EVERY SETPOINT INDICATED IN THESE SPECIFICATIONS SHALL BE USER ADJUSTABLE.
5. ALL EQUIPMENT INDEXED BY OUTSIDE AIR TEMPERATURE SHALL BE INDEXED THROUGH ONE SINGLE TEMPERATURE SENSOR.
6. EVERY ACTION INDICATED IN THIS CONTROL SEQUENCE SHALL BE ABLE TO BE INDEXED THROUGH THE B.A.S. FROM COMPUTER AT THE OWNER'S HEAD-END COMPUTER.
7. IN THE EVENT OF A POWER FAILURE, EVERYTHING SHALL AUTOMATICALLY RESET/RESTART. ALL EQUIPMENT SHALL BE STAGED ON.
8. THERE SHALL BE NO MEMORY LOSS OR REPROGRAMMING REQUIRED UPON LOSS OF POWER.
9. GENERAL REFERENCES ARE MADE TO GLOBAL COMMANDS. GLOBAL COMMANDS SHALL BE SET UP TO COMMUNICATE TO ALL COMMON EQUIPMENT, AS SPECIFIED, WITHOUT HAVING TO ADDRESS EACH AND EVERY PIECE OF EQUIPMENT INDIVIDUALLY.
10. ALL FAN SYSTEMS WITH MOTORIZED DAMPERS SHALL BE INTERLOCKED THROUGH END SWITCHES WHERE REQUIRED TO PREVENT DUCT COLLAPSE. FAN SHALL NOT START UNTIL DAMPERS ARE FULLY OPEN UNLESS SPECIFICALLY NOTED OTHERWISE.
11. B.A.S. SYSTEM SHALL UTILIZE OPTIMUM START/STOP FOR BUILDING WARM-UP AND COOL-DOWN PRIOR TO OCCUPANCY.
12. ALL CRITICAL ALARMS SHALL SEND A SIGNAL TO LOCATION AS DIRECTED BY OWNER.
13. THIS DDC CONTROL SYSTEM WILL BE DESIGNED SO THAT THE OWNER WILL BE ABLE TO ACCESS AND CONTROL THIS SYSTEM FROM ANYWHERE ON THE WAN USING A STANDARD INTERNET BROWSER SUCH AS INTERNET EXPLORER.
14. IF ADDITIONAL POINTS ARE REQUIRED TO ACHIEVE CONTROL SEQUENCE THEN THEY SHALL BE INCLUDED.
15. PROVIDE COLOR-SPACE-GRAPHICS FOR B.A.S. GRAPHICS SHALL INCLUDE A FORMAT THAT CAN FIT ON ONE SCREEN WHICH ALLOWS EASY OCCUPIED AND UNOCCUPIED SCHEDULING AS WELL AS CHANGING MAJOR SYSTEM PARAMETERS.
16. ALL CRITICAL ALARMS SHALL SEND A TEXT TO A PERSON TO BE IDENTIFIED. SITUATION CAN BE ADDRESSED IMMEDIATELY UPON OCCURRENCE.

MASTER AMBIENT SENSORS:

1. TEMPERATURE AND HUMIDITY
   - A. AMBIENT SENSOR (WET BULB AND DRY BULB) SHALL CONTROL ALL EQUIPMENT WHICH USES AMBIENT TEMPERATURE IN ITS CONTROL SEQUENCE.
2. CO2 SENSOR
   - A. MASTER AMBIENT CO2 SENSOR SHALL CONTROL ALL EQUIPMENT WHICH USES AMBIENT CO2 IN ITS CONTROL SEQUENCE.
3. INCLUDE ALL MASTER AMBIENT SENSOR READINGS ON EACH PAGE OF GRAPHICS.

CRITICAL ALARMS:

1. EACH CRITICAL ALARM SHALL BE IDENTIFIED BY A SIMPLE TEXT MESSAGE. OWNER CAN ACCESS ONLINE VIA WEB BROWSER AND IDENTIFY WHAT CRITICAL ALARM(S) EXIST.
2. THE FOLLOWING POINTS SHALL BE PROGRAMMED AS CRITICAL ALARMS:
   - A. LOW BUILDING TEMPERATURE - ANY SPACE TEMPERATURE LESS THAN 50°F.
   - B. HIGH BUILDING TEMPERATURE - ANY SPACE TEMPERATURE GREATER THAN 85°F.
   - C. HIGH BUILDING HUMIDITY - ANY SPACE HUMIDITY SENSOR ABOVE 70% RH.
   - D. ERV STATUS - ERV IS ENERGIZED BUT FAILS TO OPERATE, I.E. NO AIRFLOW.
   - E. FIRE SPRINKLER RISER ROOM TEMPERATURE BELOW 40°F (ADJ).
   - F. GROUND LOOP PUMP FAILURE.

SYMBOL LEGEND

	PETE'S PLUG
DPT	DIFFERENTIAL PRESSURE TRANSMITTER
	PUMP
	TC VALVE - ALL MODULATING
T	TEMPERATURE SENSOR
FM	FLOW METER
T	THERMOMETER (LCD)
	SHUT-OFF VALVE
	BALANCE VALVE WITH MEMORY STOP
SP	STATIC PRESSURE SENSOR
	NEEDLE VALVE
FS	FREEZESTAT
H	HUMIDITY SENSOR / HUMIDISTAT
M	MOTORIZED DAMPER
VFD	VARIABLE FREQUENCY DRIVE
	PRESSURE GAUGE
FS	FLOW SWITCH
	PRESSURE REDUCING VALVE
	RELIEF VALVE
	HIGH CAPACITY VENT PIPED TO FLOOR DRAIN
	ANGLED GLOBE VALVE
TCP	TEMPERATURE CONTROL PANEL
	TO BUILDING AUTOMATION SYSTEM
HP	HIGH PRESSURE SWITCH
AFMS	AIR FLOW MEASURING STATION
FCV	FLOW CONTROL VALVE
EXISTING / NEW	NEW TO EXISTING CONNECTION
CO2	CO2 SENSOR

BCSC TOGETHER WE LEARN

CSO
8831 Keystone Crossing, Indianapolis, IN 46240
317.848.7800 | csoinc.net
© 2018 CSO Architects, Inc. All Rights Reserved

Höweler+Yoon Architecture
617.517.4101 howeleryoon.com

D&A #24063

R.E. Dimond and Associates, Inc.
Consulting Engineers
732 North Capitol Avenue
Indianapolis, IN 46204
Phone: (317) 634-4672
Fax: (317) 638-8725

PROJECT:
BARTHOLOMEW CONSOLIDATED SCHOOL CORPORATION
MAPLE GROVE ELEMENTARY
TIPTON LAKES BLVD, COLUMBUS, IN 47201

SCOPE DRAWINGS:
These drawings describe the general scope of the project in terms of architectural design concept, the dimensions of the building, the major architectural elements and the type of structural, mechanical and electrical systems.
The drawings do not necessarily indicate or describe all work required to the satisfactory outcome and completion of the requirements of the Contract.
On the basis of the general scope indicated or described, the trade contractors shall furnish all items required for the proper execution and completion of the work.

REVISIONS:

2	Addendum #2	06/17/2025

ISSUE DATE	DRAWN BY	CHECKED BY
05/30/2025	JMC	JMC

DRAWING TITLE:
CONTROLS - GENERAL

CERTIFIED BY:
Joseph Michael Citrano REGISTERED No. PE11700335 STATE OF INDIANA PROFESSIONAL ENGINEER
06/30/2025

DRAWING NUMBER
M701

PROJECT NUMBER
2024022

CONTROL POINTS LIST				
ITEM	SIGNAL TYPE			
GROUND LOOP SYSTEM	DI	AI	AO	DO
GROUND LOOP SYSTEM ENABLE			1	
GROUND LOOP RETURN (GR) TEMPERATURE (COMMON)			1	
GROUND LOOP SUPPLY (GS) TEMPERATURE (COMMON)		1		
GROUND LOOP DIFFERENTIAL PRESSURE TRANSMITTER (DPT)		1		
GROUND LOOP MINIMUM FLOW BYPASS VALVE		1	1	
GROUND LOOP FLOW METER		1		
WELL FIELD DIFFERENTIAL PRESSURE TRANSMITTER (DPT)		1		
GLYCOL MAKE-UP UNIT (GMU-GL) ALARM	1			
GLYCOL MAKE-UP METER		1		
MASTER AMBIENT OUTDOOR AIR TEMPERATURE DB		1		
MASTER AMBIENT OUTDOOR AIR TEMPERATURE WB		1		
MASTER AMBIENT OUTDOOR AIR HUMIDITY		1		
MASTER AMBIENT OUTDOOR AIR CO2		1		
TYPICAL GROUND LOOP PUMP (GLP)	DI	AI	AO	DO
REMOTE START/STOP				1
SPEED CONTROL (VFD)			1	
STATUS (VFD)	1			
TROUBLE / ALARM	1			

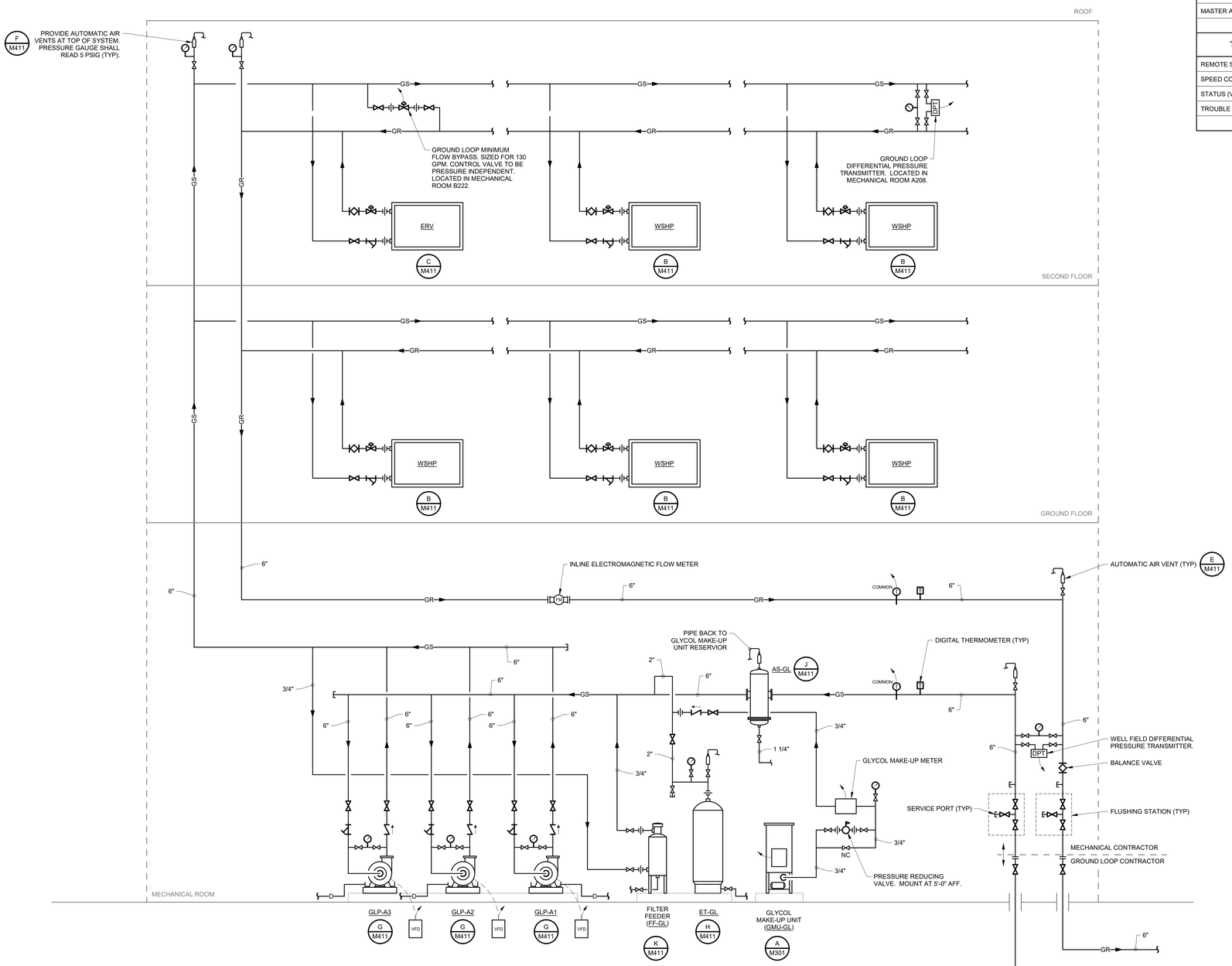

1 GROUND LOOP SCHEMATIC

SCALE: NONE

GROUND LOOP SYSTEM SEQUENCE

A. THE GROUND LOOP SYSTEM CONSISTS OF THREE (3) VARIABLE FLOW GROUND LOOP PUMPS (GLP-A1, GLP-A2 AND GLP-A3) AND A GEOTHERMAL WELL FIELD WITH 120 WELLS AND 9 CIRCUITS.

B. THE GROUND LOOP SYSTEM SHALL BE ENABLED AND DISABLED THROUGH THE BUILDING AUTOMATING SYSTEM (B.A.S.). GROUND LOOP SYSTEM SHALL BE ENABLED WHENEVER THERE IS A CALL FOR HEATING OR COOLING BY ANY OF THE WATER SOURCE HEAT PUMPS (WSHP) OR ENERGY RECOVERY VENTILATORS (ERV) WITHIN THE BUILDING.

C. THE GROUND LOOP PUMPS SHALL OPERATE IN A LEAD-LAG CONFIGURATION, WITH THE THIRD PUMP ACTING AS A STANDBY. LEAD-LAG-STANDBY PUMP CONFIGURATION SHALL BE ROTATED WEEKLY. ALL PUMPS ARE SERVED BY VARIABLE FREQUENCY DRIVES (VFD).

D. THE LEAD PUMP SHALL BE ENERGIZED AND THE ASSOCIATED VARIABLE FREQUENCY DRIVE (VFD) SHALL VARY THE SYSTEM FLOW TO MAINTAIN THE DIFFERENTIAL PRESSURE TRANSMITTER (DPT) SETPOINT OF 20 FT OF DIFFERENTIAL PRESSURE (ADJ). SEE SCHEMATIC FOR DPT LOCATION.

E. IF THE LEAD PUMP IS RUNNING AT 80% OF MAX PUMP SPEED AND THE DPT SETPOINT IS NOT SATISFIED, THE LAG PUMP SHALL BE ENERGIZED. AT THIS POINT, THE LEAD AND LAG PUMPS SHALL BE CONTROLLED TO THE SAME SPEED. WHEN THE SPEED OF BOTH PUMPS FALLS BELOW 40% OF MAX PUMP SPEED, THE LAG PUMP SHALL BE DE-ENERGIZED.

F. IF THE LEAD PUMP FAILS TO START, THE LAG / STANDBY PUMP SHALL AUTOMATICALLY START AND AN ALARM SHALL BE SENT TO THE B.A.S.

G. IF THE LEAD PUMP IS RUNNING AND THE PUMP SPEED FALLS BELOW 50% OF MAX PUMP SPEED, THE GROUND LOOP MINIMUM FLOW BYPASS VALVE SHALL MODULATE OPEN AND CLOSED TO MAINTAIN THE DIFFERENTIAL PRESSURE SETPOINT.

H. LOOP TEMPERATURE HIGH AND LOW ALARMS WILL BE GENERATED IF THE LOOP WATER HEADER SUPPLY TEMPERATURE RISES ABOVE 90° F (ADJ) OR FALLS BELOW 40°F (ADJ).

I. GLYCOL MAKE-UP UNIT SHALL OPERATE AUTOMATICALLY. GLYCOL MAKE-UP UNIT SHALL SEND ALARM TO THE B.A.S. WHEN LOW LEVEL CONTACT IS MADE.

J. B.A.S. SHALL ALARM WHEN GLYCOL MAKE-UP METER RECORDS MORE THAN TEN (10) GALLONS IN AN HOUR OF GLYCOL MAKE-UP.

BCSC TOGETHER WE LEARN

CSO
8831 Keystone Crossing, Indianapolis, IN 46240
317.848.7800 | csoinc.net

© 2018 CSO Architects, Inc. All Rights Reserved

Höweler+Yoon Architecture
617.517.4101 howeleryoon.com

D&A #24063

R.E. Dimond and Associates, Inc.
Consulting Engineers
732 North Capitol Avenue
Indianapolis, IN 46204
Phone: (317) 634-4672
Fax: (317) 638-8725

PROJECT:
BARTHOLOMEW CONSOLIDATED SCHOOL CORPORATION
MAPLE GROVE ELEMENTARY
TIPTON LAKES BLVD, COLUMBUS, IN 47201

SCOPE DRAWINGS:
These drawings indicate the general scope of the project in terms of architectural design concept, the dimensions of the building, the major architectural elements and the type of construction and building materials and systems.
The drawings do not necessarily indicate or describe all work required for full performance and completion of the requirements of the Contract.
On the basis of the general scope indicated or described, the bidders/contractors shall furnish all items required for the proper execution and completion of the work.

REVISIONS:

2	Addendum #2	06/17/2025

ISSUE DATE	DRAWN BY	CHECKED BY
05/30/2025	JMC	JMC

DRAWING TITLE:
CONTROLS - GROUND LOOP SYSTEM

CERTIFIED BY:
Joseph Michael Chaney REGISTERED No. PE11700335 STATE OF INDIANA PROFESSIONAL ENGINEER
05/30/2025

DRAWING NUMBER
M702 △2

PROJECT NUMBER
2024022

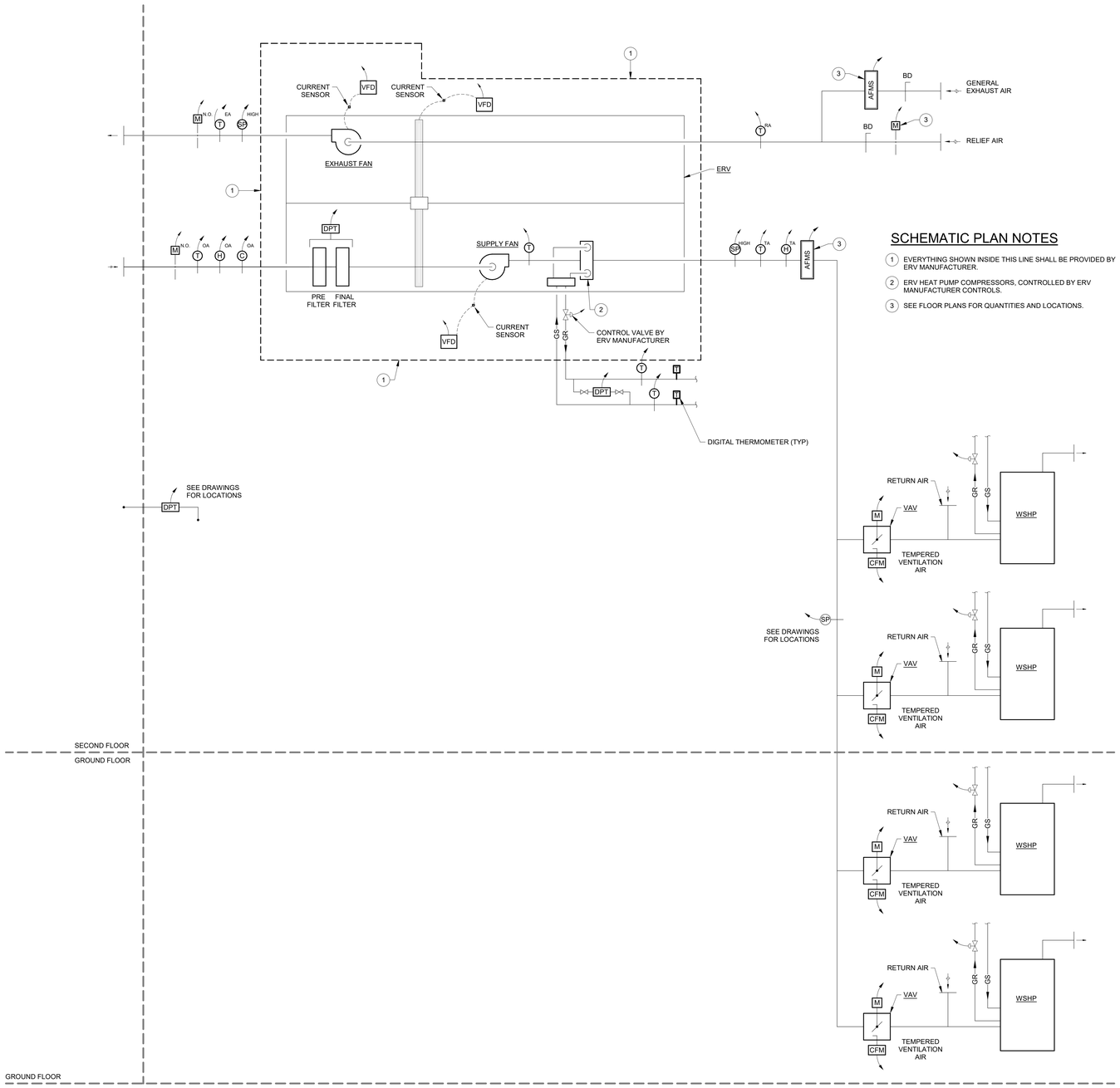

SCHEMATIC PLAN NOTES

1. EVERYTHING SHOWN INSIDE THIS LINE SHALL BE PROVIDED BY ERV MANUFACTURER.
2. ERV HEAT PUMP COMPRESSORS, CONTROLLED BY ERV MANUFACTURER CONTROLS.
3. SEE FLOOR PLANS FOR QUANTITIES AND LOCATIONS.

1 INDOOR ERV WITH WSHP COIL AIRFLOW

SCALE: NONE

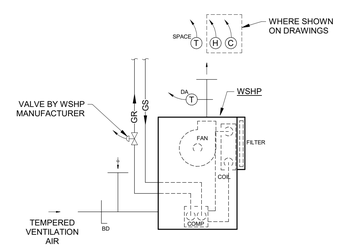

A TYPICAL WSHP SCHEMATIC

SCALE: NONE

CONTROL POINTS LIST

ITEM	SIGNAL TYPE			
ERV-A & ERV-B 2	DI	AI	AO	DO
OUTDOOR AIR TEMPERATURE (COMMON)		1		
OUTDOOR AIR HUMIDITY (COMMON)		1		
OUTDOOR AIR C02 (COMMON)		1		
OUTDOOR AIR ISOLATION DAMPER	1			1
FILTER DIFFERENTIAL PRESSURE		1		
SUPPLY FAN START / STOP				1
SUPPLY FAN STATUS (CURRENT SENSOR)		1		
SUPPLY FAN SPEED (VFD / ECM)			1	
ENTHALPY WHEEL LEAVING AIR TEMPERATURE (SUPPLY SIDE)		1		
ERV CONTROLLER BACNET COMMUNICATION	1			
ERV GROUND LOOP TEMPERATURE CONTROL VALVE				1
ERV GROUND LOOP WATER DIFFERENTIAL PRESSURE		1		
ERV GROUND LOOP SUPPLY WATER TEMPERATURE		1		
ERV GROUND LOOP RETURN WATER TEMPERATURE		1		
HIGH STATIC PRESSURE SWITCH (SUPPLY SIDE)	1			
TEMPERED AIR TEMPERATURE		1		
TEMPERED AIR HUMIDITY		1		
TEMPERED AIR FLOW MEASURING STATION		1		
RELIEF AIR DAMPER ACTUATOR	1		1	
GENERAL EXHAUST AIR FLOW MEASURING STATION		1		
RELIEF AIR TEMPERATURE		1		
ENTHALPY WHEEL START/STOP				1
ENTHALPY WHEEL STATUS (CURRENT SENSOR)		1		
ENTHALPY WHEEL SPEED (VFD / ECM)			1	
EXHAUST FAN START / STOP				1
EXHAUST FAN STATUS (CURRENT SENSOR)				1
EXHAUST FAN SPEED (VFD / ECM)			1	
HIGH STATIC PRESSURE SWITCH (EXHAUST SIDE)	1			
EXHAUST AIR TEMPERATURE		1		
EXHAUST AIR DAMPER ACTUATOR	1			1
DUCT STATIC PRESSURE SENSOR		1		
BUILDING STATIC PRESSURE SENSOR		1		
WSHP (TYPICAL)	DI	AI	AO	DO
VENTILATION VAV BOX AIR DAMPER		1	1	
VENTILATION VAV BOX AIRFLOW		1		
WSHP CONTROLLER BACNET COMMUNICATION				
WSHP GROUND LOOP TEMPERATURE CONTROL VALVE (MODULATING)		1	1	
GROUND LOOP SUPPLY WATER TEMPERATURE (COMMON)		1		
GROUND LOOP RETURN WATER TEMPERATURE (COMMON)		1		
DISCHARGE AIR TEMPERATURE		1		
SPACE TEMPERATURE		1		
SPACE SETPOINT		1		
SPACE HUMIDITY (WHERE INDICATED ON DRAWINGS)		1		
SPACE CO2 (WHERE INDICATED ON DRAWINGS)		1		

INDOOR ERV WITH WSHP COIL SEQUENCE

A. EACH ERV SYSTEM CONSISTS OF ONE (1) ERV WITH ENTHALPY WHEEL, SUPPLY FAN, EXHAUST FAN AND INTEGRAL WATER SOURCE HEAT PUMP. THE ERV PROVIDES TEMPERED VENTILATION AIR TO MULTIPLE VAV BOXES THAT SERVE THE WATER SOURCE HEAT PUMPS ASSOCIATED WITH THE ERV.

B. OCCUPIED MODE

a. DURING OCCUPIED MODE, THE RESPECTIVE ERV EXHAUST AIR DAMPER AND OUTDOOR AIR DAMPER SHALL OPEN. DAMPERS SHALL PROVE OPEN VIA END SWITCH.

b. THE ERV SHALL BE COMMANDED ON AND OPERATE UNDER ITS INTEGRAL DDC CONTROLS TO DELIVER 70°F (ADJ) TEMPERED AIR TO THE VAV BOXES SERVING THE WATER SOURCE HEAT PUMPS.

c. VAV BOXES SHALL BE INDEXED TO 100% OF DESIGN AIRFLOW TO DELIVER TEMPERED VENTILATION AIR TO EACH RESPECTIVE WATER SOURCE HEAT PUMP IN THE ERV SYSTEM.

d. EACH WATER SOURCE HEAT PUMP SHALL OPERATE UNDER ITS INTEGRAL DDC CONTROLS TO MAINTAIN THE SPACE TEMPERATURE SETPOINT.

C. UNOCCUPIED MODE

a. DURING UNOCCUPIED MODE, THE ERV SHALL BE COMMANDED TO RUN AT 50% OF DESIGN AIRFLOW.

b. VAV BOXES SHALL BE INDEXED TO 50% OF DESIGN AIRFLOW.

c. EACH WATER SOURCE HEAT PUMP SHALL OPERATE UNDER ITS INTEGRAL DDC CONTROLS TO MAINTAIN THE SPACE SETBACK TEMPERATURE RANGE.

d. THE ERV SHALL MONITOR THE DUCT STATIC PRESSURE SENSOR LOCATED IN THE DOWNSTREAM DUCTWORK. WHEN DUCT STATIC PRESSURE EXCEEDS THE DUCT STATIC PRESSURE SETPOINT ASSOCIATED WITH 50% OF DESIGN AIRFLOW, THE ERV SHALL REDUCE THE SUPPLY FAN SPEED TO MAINTAIN THE SETPOINT.

D. THE ERV EXHAUST AIR FAN SHALL REMOVE GENERAL EXHAUST AIR AND RELIEF AIR FROM THE BUILDING. MINIMUM GENERAL EXHAUST SHALL BE CONSTANT AND MONITORED BY DUCT MOUNTED AIRFLOW MEASURING STATIONS (AFMS). THE MOTORIZED DAMPER IN THE ERV RELIEF AIR DUCTWORK SHALL MODULATE OPEN AND CLOSED TO MAINTAIN THE MINIMUM GENERAL EXHAUST AIRFLOW AS MEASURED BY THE TEST AND BALANCE CONTRACTOR.

E. BUILDING STATIC PRESSURE SENSORS SHALL MONITOR THE BUILDING STATIC PRESSURE ASSOCIATED WITH EACH ERV SYSTEM.

F. THE BUILDING AUTOMATION SYSTEM (BAS) SHALL MONITOR SPACE HUMIDITY SENSORS. IF ANY SENSOR MEASURES A SPACE HUMIDITY GREATER THAN 60% RH, THE BAS SHALL ENABLE THE DEHUMIDIFICATION MODE ON THE RESPECTIVE ERV.

G. SAFETIES - TYPICAL FOR ALL ENERGY RECOVERY VENTILATORS

a. UNIT SMOKE DETECTORS - DETECTORS SHALL BE FURNISHED AND INSTALLED BY THE ELECTRICAL CONTRACTOR AND SHALL STOP THE SUPPLY FAN AND CLOSE THE OUTDOOR AIR DAMPER UPON ALARM ACTIVATION. TEMPERATURE CONTROL CONTRACTOR SHALL SUPERVISE DETECTOR INSTALLATION LOCATIONS AND WIRE INTO FAN CIRCUITS.

b. SUPPLY FAN

- ERV SUPPLY FAN SHALL STOP AND SYSTEM SHALL GO INTO ALARM IF THE SUPPLY FAN DISCHARGE STATIC PRESSURE EXCEEDS 3" (ADJ) (AUTO RESET).
- THE VFD CURRENT SENSOR SHALL REPORT FAN STATUS AND ALARM BAS WHEN FAN FAILS TO OPERATE.

c. EXHAUST FAN

- ERV EXHAUST FAN SHALL STOP AND SYSTEM SHALL GO INTO ALARM IF THE SUPPLY FAN DISCHARGE STATIC PRESSURE EXCEEDS E" (ADJ) (AUTO RESET).
- THE VFD CURRENT SENSOR SHALL REPORT FAN STATUS AND ALARM BAS WHEN FAN FAILS TO OPERATE.
- ERV EXHAUST FAN SHALL NOT BE PERMITTED TO OPERATE UNTIL ACTUATOR END SWITCH PROVIDES PROOF OF DAMPER POSITION AS OPEN

BCSC TOGETHER WE LEARN

CSO
8831 Keystone Crossing, Indianapolis, IN 46240
317.848.7800 | csoinc.net
© 2018 CSO Architects, Inc. All Rights Reserved
Höweler+Yoon Architecture
617.517.4101 howeleryoon.com

D&A #24063
R.E. Dimond and Associates, Inc.
Consulting Engineers
732 North Capitol Avenue
Indianapolis, IN 46204
Phone: (317) 634-4672
Fax: (317) 638-8725

PROJECT:
BARTHOLOMEW CONSOLIDATED SCHOOL CORPORATION
MAPLE GROVE ELEMENTARY
TIPTON LAKES BLVD, COLUMBUS, IN 47201

SCOPE DRAWINGS:
These drawings indicate the general scope of the project in terms of architectural design concept, the dimensions of the building, the major architectural elements and the type of construction required for the building shell.
The drawings do not necessarily indicate or describe all work required for full performance and completion of the contract for the building.
On the basis of the general scope indicated or described, the trade contractors shall furnish all items required for the proper execution and completion of the work.

REVISIONS:

2	Addendum #2	06/17/2025

ISSUE DATE	DRAWN BY	CHECKED BY
05/30/2025	JMC	JMC

DRAWING TITLE:
CONTROLS - ERV & WSHP AIRFLOW SCHEMATICS

CERTIFIED BY:
Joseph Michael Chaney REGISTERED No. PE11700335 STATE OF INDIANA PROFESSIONAL ENGINEER
05/30/2025

DRAWING NUMBER
M703

PROJECT NUMBER
2024022

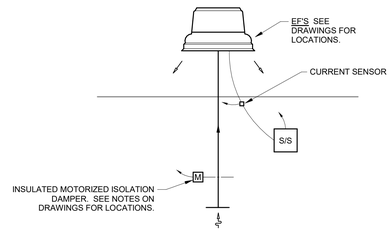

A TYPICAL EXHAUST FAN

SCALE: NONE

EXHAUST FAN

A. GENERAL EXHAUST FANS SHALL BE INDEXED ON THROUGH THE B.A.S. SYSTEM. EXHAUST FANS SHALL BE INDEXED ON DURING OCCUPIED MODE UNLESS SPECIFICALLY NOTED OTHERWISE IN SEQUENCE OF OPERATION.

B. A CURRENT MONITOR SHALL ALARM B.A.S. IF FAN FAIL TO OPERATE WHEN INDEXED ON.

C. MOTORIZED ISOLATION DAMPER SHALL CLOSE WHEN FAN IS INDEXED OFF.

D. KITCHEN HOOD/CONDENSATE HOOD EXHAUST FANS SHALL BE INDEXED ON BY SWITCH/SENSOR IN SPACE AND MONITORED BY B.A.S.

KILN EXHAUST FAN:

A. ALL WORK AND CONTROL COMPONENTS PROVIDED AND INSTALLED BY TCC UNLESS SPECIFIED ELSEWHERE.

B. THE KILN IS STARTED MANUALLY BY THE OPERATOR. CURRENT SENSOR SHALL MONITOR ONE LEG OF THE POWER FEED TO THE KILN FOR STATUS INDICATION.

C. WHEN STATUS IS PROVEN, A TIME DELAY OFF RELAY SHALL ENERGIZE EXHAUST FAN EF-3. THE EXHAUST FAN SHALL RUN WHILE THE KILN IS IN OPERATION AND ALSO REMAIN ON THROUGH THE TIME DELAY OFF RELAY FOR FOUR (4) ADDITIONAL HOURS AFTER KILN TURNS OFF.

D. IF APPLICABLE, THE TIME DELAY RELAY SHALL ALSO ENERGIZE THE KILN FAN RELAY WHICH WILL ENERGIZE THE KILN FAN OUTLET. THE KILN EXHAUST FAN SHALL REMAIN ON THROUGH THE TIME DELAY RELAY WITH THE AREA EXHAUST FAN.

E. PROVIDE A SONALERT AS PART OF THIS SYSTEM TO SOUND IF THE EXHAUST FAN DOES NOT START OR IF IT FAILS TO RUN WHILE THE KILN IS ENERGIZED. PROVIDE A TIME DELAY ON RELAY TO PROVIDE A 90 SECOND DELAY IN THE SONALERT CIRCUIT TO KEEP IT FROM SOUNDING ON SYSTEM STARTUP.

F. AREA EXHAUST FAN STATUS SHALL BE PROVEN THROUGH A PRESSURE DIFFERENTIAL SWITH GIVING POSITIVE INDICATION OF AIR FLOW. A CURRENT SENSOR IS NOT ACCEPTABLE FOR THIS APPLICATION.

G. PROVIDE ALL OF THE ABOVE COMPONENTS AS APPLICABLE IN A CONTROL PANEL MOUNTED IN THE KILN AREA. ON THE FACE OF THAT PANEL, PROVIDE THE FOLLOWING ENGRAVED LABEL: KILN HOOD EXHAUST FAN CONTROL PANEL.

CONTROL POINTS LIST				
ITEM	SIGNAL TYPE			
TYPICAL EF UNLESS NOTED OTHERWISE	DI	AI	AO	DO
REMOTE START/STOP				1
CURRENT SENSOR		1		
MOTORIZED ISOLATION DAMPER		1	1	

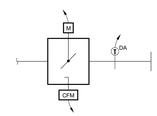

B TYPICAL VAV SCHEMATIC

SCALE: NONE

TYPICAL VAV (VENTILATION)

A. OCCUPIED

1. VAV AIR VALVE SHALL MODULATE TO MAINTAIN 100% DESIGN AIRFLOW SETPOINT.

B. UNOCCUPIED

1. VAV AIR VALVE SHALL MODULATE TO MAINTAIN 50% DESIGN AIRFLOW SETPOINT.

CONTROL POINTS LIST				
ITEM	SIGNAL TYPE			
TYPICAL VAV	DI	AI	AO	DO
AIR VALVE ACTUATOR			1	
AIR VALVE CFM		1		
DISCHARGE AIR TEMPERATURE		1		

CONTROL POINTS LIST				
ITEM	SIGNAL TYPE			
MISC. CONTROL POINTS	DI	AI	AO	DO
KITCHEN EXHAUST HOOD STATUS (CURRENT SENSOR)		1		
KITCHEN MAKE-UP AIR UNIT STATUS (CURRENT SENSOR)		1		
KITCHEN MAKE-UP AIR UNIT BACNET INTERFACE	1			

NOTE: REFER TO DRAWINGS FS SERIES DRAWINGS FOR ADDTIONAL INFORMATION ON KITCHEN EQUIPMENT.

BCSC TOGETHER WE LEARN

CSO
8831 Keystone Crossing, Indianapolis, IN 46240
317.848.7800 | csoinc.net

© 2018 CSO Architects, Inc. All Rights Reserved

Höweler+Yoon Architecture
617.517.4101 howeleryoon.com

D&A #24063
R.E. Dimond and Associates, Inc.
Consulting Engineers
732 North Capitol Avenue
Indianapolis, IN 46204
Phone: (317) 634-4672
Fax: (317) 638-8725

PROJECT:
BARTHOLOMEW CONSOLIDATED SCHOOL CORPORATION
MAPLE GROVE ELEMENTARY
TIPTON LAKES BLVD, COLUMBUS, IN 47201

SCOPE DRAWINGS:
These drawings indicate the general scope of the project in terms of architectural design concept, the dimensions of the building, the major architectural elements and the type of construction and mechanical and electrical systems.
The drawings do not necessarily indicate or describe all work required for full performance and completion of the requirements of the Contract.
Provide the basis of the general scope indicated or described, the balance of work required to complete all items required for the proper execution and completion of the work.

REVISIONS:
2 Addendum #2 06/17/2025

ISSUE DATE	DRAWN BY	CHECKED BY
05/30/2025	JMC	JMC

DRAWING TITLE:
CONTROLS - TERMINAL UNITS

CERTIFIED BY:
Joseph Michael Chaney
REGISTERED
No. PE11700335
STATE OF INDIANA
PROFESSIONAL ENGINEER
05/30/2025

DRAWING NUMBER
M704

PROJECT NUMBER
2024022

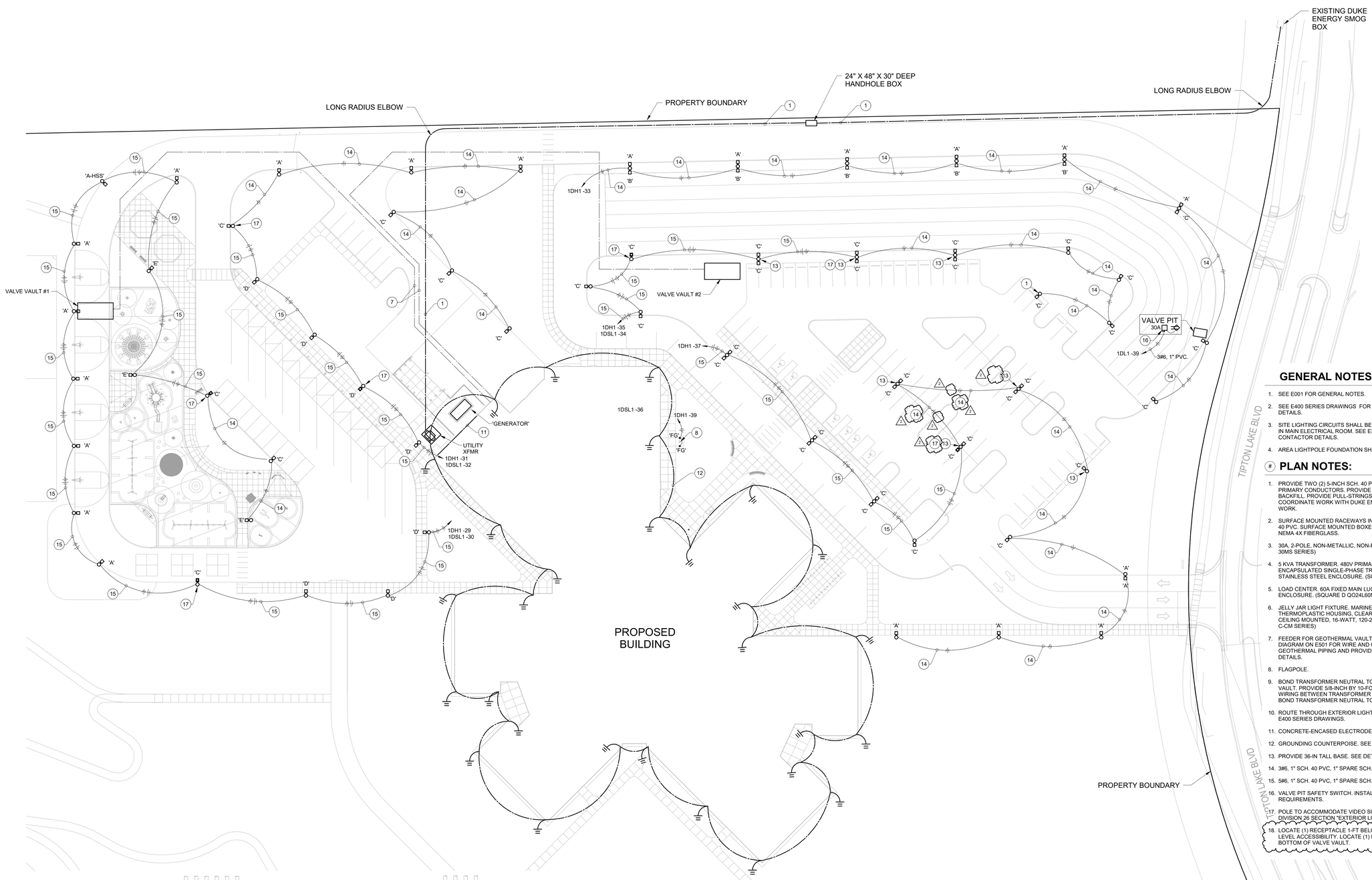

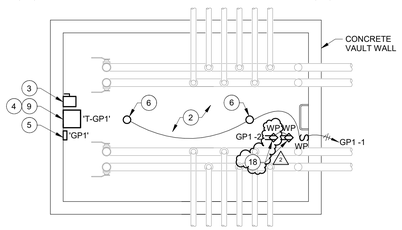

1 ENLARGED VALVE VAULT #1

SCALE: 1/4" = 1'-0"

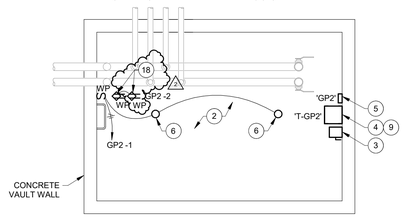

2 ENLARGED VALVE VAULT #2

SCALE: 1/4" = 1'-0"

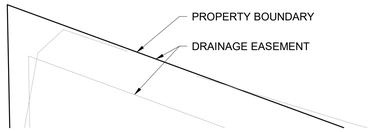

SITE PLAN - ELECTRICAL

SCALE: 1" = 30'-0"

NORTH

0 5 15 30 60 90 120

1 2 3 4

GENERAL NOTES:

1. SEE E001 FOR GENERAL NOTES.
2. SEE E400 SERIES DRAWINGS FOR LIGHT POLE CONCRETE BASE DETAILS.
3. SITE LIGHTING CIRCUITS SHALL BE ROUTED THROUGH CONTACTOR IN MAIN ELECTRICAL ROOM. SEE E301 FOR LOCATION. SEE E403 FOR CONTACTOR DETAILS.
4. AREA LIGHTPOLE FOUNDATION SHALL BE 6-IN TALL UNO. SEE DETAIL.

PLAN NOTES:

1. PROVIDE TWO (2) 5-INCH SCH. 40 PVC CONDUITS FOR DUKE ENERGY PRIMARY CONDUCTORS. PROVIDE TRENCH AND COMPACTED BACKFILL. PROVIDE PULL-STRINGS IN EACH OF THE TWO CONDUITS. COORDINATE WORK WITH DUKE ENERGY PRIOR TO BEGINNING WORK.
2. SURFACE MOUNTED RACEWAYS IN GEOTHERMAL WELLS TO BE SCH. 40 PVC. SURFACE MOUNTED BOXES AND ENCLOSURES SHALL BE NEMA 4X FIBERGLASS.
3. 30A, 2-POLE, NON-METALLIC, NON-FUSIBLE SWITCH. (MENNEKES ME 30MS SERIES)
4. 5 KVA TRANSFORMER. 480V PRIMARY, 120/240V SECONDARY. RESIN-ENCAPSULATED SINGLE-PHASE TRANSFORMER IN NEMA 4X STAINLESS STEEL ENCLOSURE. (SQUARE D 4XSS40FSS SERIES)
5. LOAD CENTER. 60A FIXED MAIN LUGS, NON-METALLIC NEMA 3R ENCLOSURE. (SQUARE D QO24L60NRNM SERIES)
6. JELLY JAR LIGHT FIXTURE. MARINE GRADE POLYESTER THERMOPLASTIC HOUSING, CLEAR LENS, WET LOCATION RATED, CEILING MOUNTED, 16-WATT, 120-277 VAC. (SOLAS RAY IBVT-016-50-U-C-CM SERIES)
7. FEEDER FOR GEOTHERMAL VAULT CIRCUITS. SEE ONE-LINE DIAGRAM ON E501 FOR WIRE AND CONDUIT SIZE. FOLLOW ROUTE OF GEOTHERMAL PIPING AND PROVIDE HAND HOLES AS NEEDED. SEE DETAILS.
8. FLAGPOLE.
9. BOND TRANSFORMER NEUTRAL TO STEEL/REBAR FOR GEOTHERMAL VAULT. PROVIDE 5/8-INCH BY 10-FOOT GROUND ROD AND #8 AWG WIRING BETWEEN TRANSFORMER NEUTRAL AND GROUND ROD. BOND TRANSFORMER NEUTRAL TO METAL LADDER.
10. ROUTE THROUGH EXTERIOR LIGHTING CONTACTOR. SEE DETAIL, E400 SERIES DRAWINGS.
11. CONCRETE-ENCASED ELECTRODE. SEE GROUNDING DETAILS.
12. GROUNDING COUNTERPOISE. SEE GROUNDING DETAILS.
13. PROVIDE 36-IN TALL BASE. SEE DETAIL.
14. 3#6, 1" SCH. 40 PVC, 1" SPARE SCH. 40 PVC W/ PULL STRING.
15. 5#6, 1" SCH. 40 PVC, 1" SPARE SCH. 40 PVC W/ PULL STRING.
16. VALVE PIT SAFETY SWITCH. INSTALL PER CITY OF COLUMBUS REQUIREMENTS.
17. POLE TO ACCOMMODATE VIDEO SURVEILLANCE CAMERA. SEE DIVISION 26 SECTION "EXTERIOR LIGHTING."
18. LOCATE (1) RECEPTACLE 1-FT BELOW MANHOLE COVER FOR STREET LEVEL ACCESSIBILITY. LOCATE (1) RECEPTACLE 16-IN ABOVE BOTTOM OF VALVE VAULT.

BCSC TOGETHER WE LEARN

CSO
8831 Keystone Crossing, Indianapolis, IN 46240
317.848.7800 | csoinc.net

© 2018 CSO Architects, Inc. All Rights Reserved

Howeler+Yoon Architecture
617.517.4101 howeleryoon.com

D&A #24063

R.E. Dimond and Associates, Inc.
Consulting Engineers
732 North Capitol Avenue
Indianapolis, IN 46204
Phone: (317) 634-4672
Fax: (317) 638-8725

PROJECT:
BARTHOLOMEW CONSOLIDATED SCHOOL CORPORATION
MAPLE GROVE ELEMENTARY
TIPTON LAKES BLVD, COLUMBUS, IN 47201

SCOPE DRAWINGS:
These drawings indicate the general scope of the project in terms of architectural design concept, the dimensions of the building, the major architectural elements and the type of construction and mechanical and electrical systems.
The drawings do not necessarily indicate or describe all work required for full performance and completion of the Project in accordance with the Contract.
On the basis of the general scope indicated or described, the trade contractors shall furnish all items required for the proper execution and completion of the work.

REVISIONS:

1	Addendum #1	06/10/2025
2	Addendum #2	06/17/2025

ISSUE DATE	DRAWN BY	CHECKED BY
05/30/2025	LPC	TEH

DRAWING TITLE:
SITE PLAN - ELECTRICAL

CERTIFIED BY:
TIMOTHY E. HILL REGISTERED No. PE19800083 STATE OF INDIANA PROFESSIONAL ENGINEER
05/30/2025

DRAWING NUMBER
E100

PROJECT NUMBER
2024022

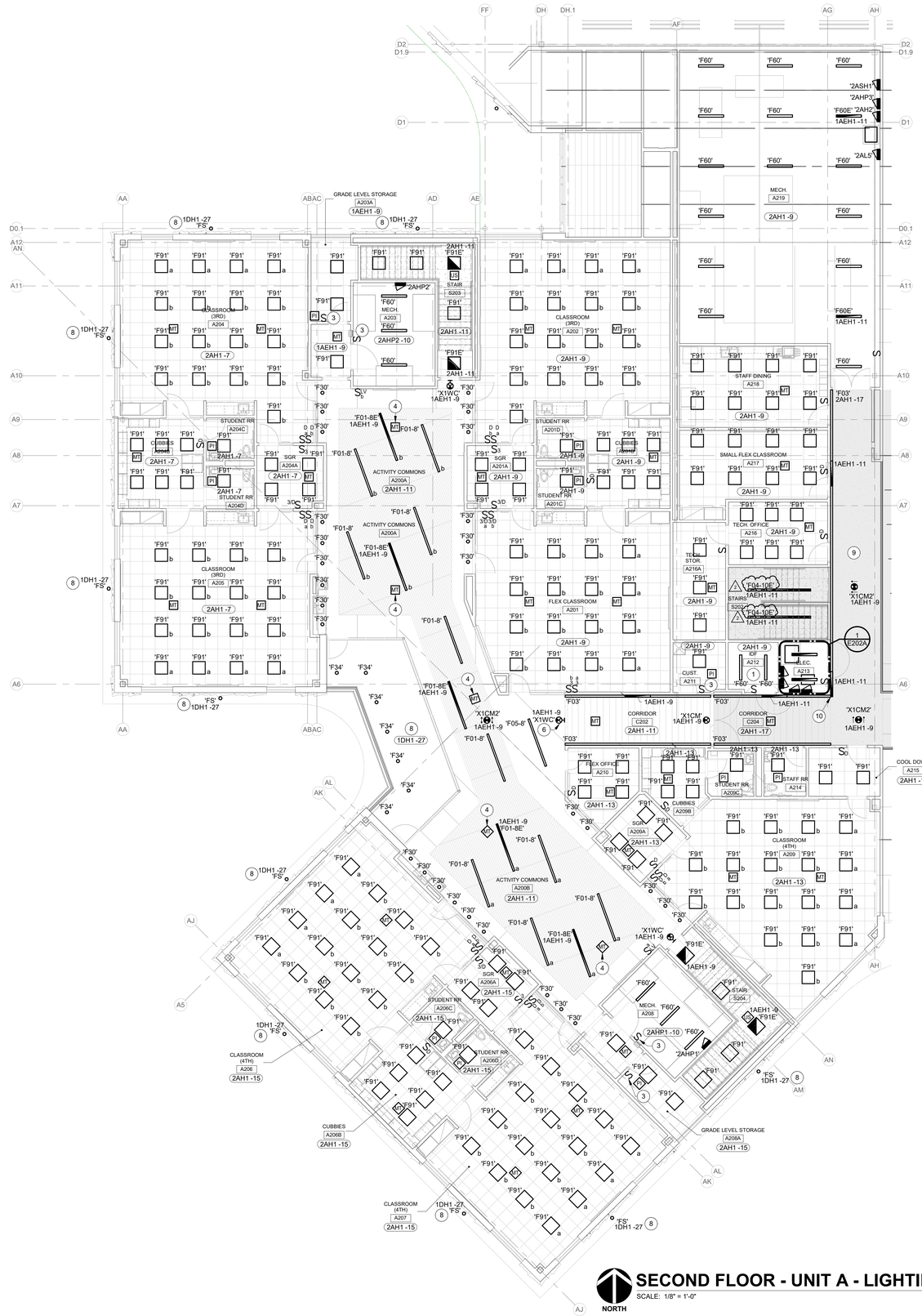

SECOND FLOOR - UNIT A - LIGHTING

SCALE: 1/8" = 1'-0"

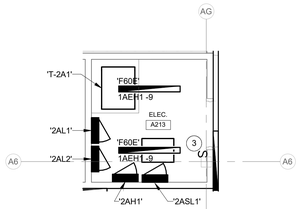

1 ELECTRICAL ROOM A213 - LIGHTING

SCALE: 1/4" = 1'-0"

GENERAL NOTES:

1. SEE E001 FOR GENERAL NOTES.
2. SEE E601 FOR LIGHTING CONTROL SCHEDULE.

PLAN NOTES:

1. COORDINATE LOCATION OF LIGHTING FIXTURES AND DEVICES IN THIS ROOM WITH TELECOMMUNICATIONS INSTALLER PRIOR TO ROUGH-IN.
2. NOT USED
3. INSTALL RECEPTACLE IN DIVIDED TWO-GANG BOX WITH LIGHT SWITCH.
4. PROVIDE BLACK OCCUPANCY SENSOR.
5. NOT USED
6. INSTALL TO WALL 8 INCHES ABOVE BOTTOM OF BULKHEAD.
7. NOT USED.
8. EXTERIOR LIGHTING CIRCUIT TO BE FED THROUGH LIGHTING CONTACTOR IN MECHANICAL ROOM D178. SEE E301 FOR LOCATION OF PANELS AND LIGHTING CONTACTOR. SEE E403 FOR WIRING DIAGRAM. CENTER FIXTURES IN SOFFITS BETWEEN SOFFIT REVEALS. MATCH FIXTURE LOCATIONS WITH PATIO BELOW.
9. LIGHTING FIXTURES LOCATED IN SHADED REGION SHALL BE CONTROLLED BY DISCOVERY CENTER LIGHTING CONTROLS. SEE E201A FOR CONTROLLER LOCATION IN MEDIA CENTER A117.
10. CEILING TRANSITION. SEE ARCHITECTUAL REFLECTED CEILING PLANS. AFFECTS TYPE 'F03' FIXTURE HOUSING.

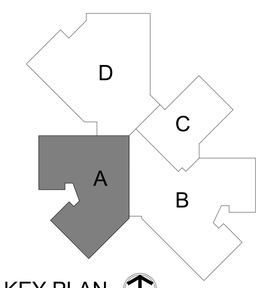

KEY PLAN

NORTH

BCSC TOGETHER WE LEARN

CSO
8831 Keystone Crossing, Indianapolis, IN 46240
317.848.7800 | csoinc.net

© 2018 CSO Architects, Inc. All Rights Reserved

Höweler+Yoon Architecture
617.517.4101 howeleryoon.com

D&A #24063
R.E. Dimond and Associates, Inc.
Consulting Engineers
732 North Capitol Avenue
Indianapolis, IN 46204
Phone: (317) 634-4672
Fax: (317) 638-8725

PROJECT:
BARTHOLOMEW CONSOLIDATED SCHOOL CORPORATION
MAPLE GROVE ELEMENTARY
TIPTON LAKES BLVD, COLUMBUS, IN 47201

SCOPE DRAWINGS:
These drawings indicate the general scope of the project in terms of architectural design concept, the dimensions of the building, the major architectural elements and the type of structural, mechanical and electrical systems.
The drawings do not necessarily indicate or describe all work required for full performance and completion of the requirements of the Contract.
On the basis of the general scope indicated or described, the trade contractors shall furnish all items required for the proper execution and completion of the work.

REVISIONS:

1	Addendum #1	06/10/2025
2	Addendum #2	06/17/2025

ISSUE DATE	DRAWN BY	CHECKED BY
05/30/2025	LPC	TEH

DRAWING TITLE:
SECOND FLOOR PLAN - UNIT A - LIGHTING

CERTIFIED BY:
TIMOTHY E. HILL REGISTERED No. PE19800083 STATE OF INDIANA PROFESSIONAL ENGINEER
05/30/2025

DRAWING NUMBER
E202A

PROJECT NUMBER
2024022

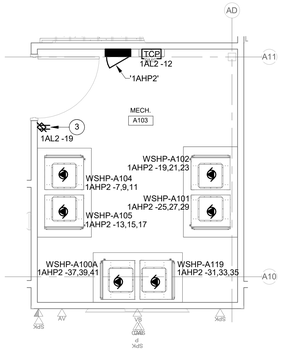

3 ENLARGED MECH A103 - POWER

SCALE: 1/4" = 1'-0"

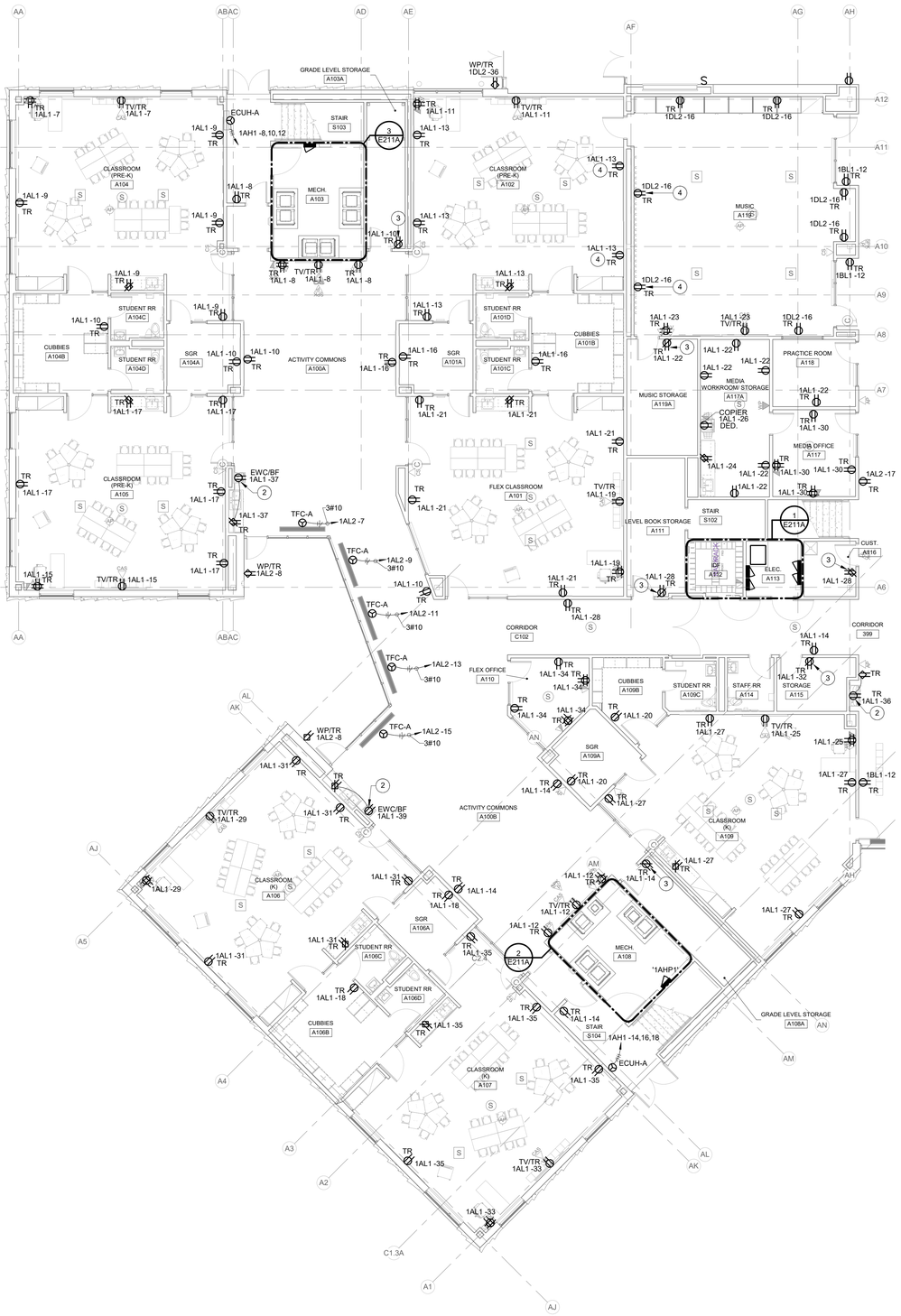

FIRST FLOOR - UNIT A - POWER

SCALE: 1/8" = 1'-0"

NORTH

GENERAL NOTES:

1. SEE E001 FOR GENERAL NOTES.
2. SEE TELECOM DRAWING FOR "TV" OUTLET MOUNTING HEIGHT AND LOCATION.

PLAN NOTES:

1. COORDINATE LOCATION OF ELECTRICAL DEVICES IN THIS ROOM WITH TELECOMMUNICATIONS INSTALLER PRIOR TO ROUGH-IN.
2. PROVIDE RECEPTACLE CONCEALED IN EWC/BF HOUSING. COORDINATE LOCATION WITH EWC INSTALLER PRIOR TO ROUGH-IN. FEED RECEPTACLE FROM LOAD SIDE OF GFCI-TYPE RECEPTACLE INDICATED.
3. INSTALL RECEPTACLE IN DIVIDED TWO-GANG BOX WITH LIGHT SWITCH.
4. PROVIDE ACOUSTIC SEALING.
5. HARDWIRE CONNECTIONS FOR DOOR HARDWARE POWER SUPPLY.

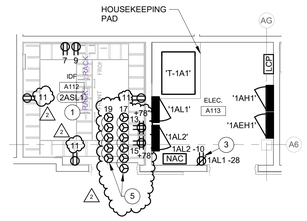

1 ENLARGED IDF A112/ELEC A113 - POWER

SCALE: 1/4" = 1'-0"

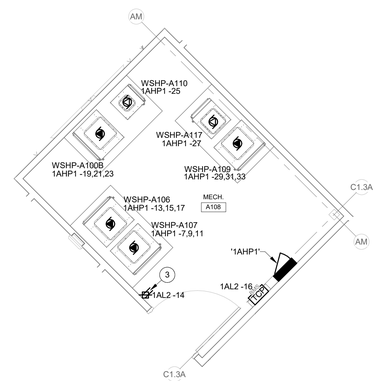

2 ENLARGED MECH A108 - POWER

SCALE: 1/4" = 1'-0"

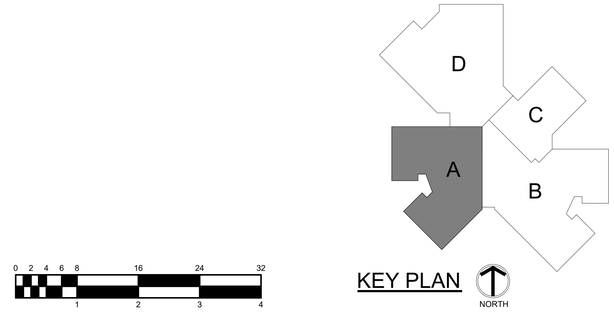

KEY PLAN

0 2 4 6 8 16 24 32
1 2 3 4

BCSC TOGETHER WE LEARN

CSO
8831 Keystone Crossing, Indianapolis, IN 46240
317.848.7800 | csoinc.net

© 2018 CSO Architects, Inc. All Rights Reserved

Howeler+Yoon Architecture
617.517.4101 howeleryoon.com

D&A #24063

R.E. Dimond and Associates, Inc.
Consulting Engineers
732 North Capitol Avenue
Indianapolis, IN 46204
Phone: (317) 634-4672
Fax: (317) 638-8725

PROJECT:
BARTHOLOMEW CONSOLIDATED SCHOOL CORPORATION
MAPLE GROVE ELEMENTARY
TIPTON LAKES BLVD, COLUMBUS, IN 47201

SCOPE DRAWINGS:
These drawings indicate the general scope of the project in terms of architectural design concept, the dimensions of the spaces, the locations of equipment and the type of structural, mechanical and electrical systems.
The drawings do not necessarily indicate or describe all work required for the performance and completion of the requirements of the Contract.
On the basis of the general scope indicated or described, the trade contractors shall furnish all items required for the proper execution and completion of the work.

REVISIONS:

2	Addendum #2	06/17/2025

ISSUE DATE	DRAWN BY	CHECKED BY
05/30/2025	LPC	TEH

DRAWING TITLE:
FIRST FLOOR PLAN - UNIT A - POWER

CERTIFIED BY:
TIMOTHY E. HILP REGISTERED No. PE19800083 STATE OF INDIANA PROFESSIONAL ENGINEER
06/30/2026

DRAWING NUMBER
E211A

PROJECT NUMBER
2024022

4 ENLARGED ELEC B126 - POWER

SCALE: 1/4" = 1'-0"

3 ENLARGED MECH B132 - POWER

SCALE: 1/4" = 1'-0"

FIRST FLOOR - UNIT B - POWER

SCALE: 1/8" = 1'-0"

1 ENLARGED IDF B129 - POWER

SCALE: 1/4" = 1'-0"

2 ENLARGED MECH B137 - POWER

SCALE: 1/4" = 1'-0"

GENERAL NOTES:

1. SEE E001 FOR GENERAL NOTES.
2. SEE TELECOM DRAWING FOR "TV" OUTLET MOUNTING HEIGHT AND LOCATION.

PLAN NOTES:

1. COORDINATE LOCATION OF ELECTRICAL DEVICES IN THIS ROOM WITH TELECOMMUNICATIONS INSTALLER PRIOR TO ROUGH-IN.
2. PROVIDE RECEPTACLE CONCEALED IN EWC/BF HOUSING. COORDINATE LOCATION WITH EWC INSTALLER PRIOR TO ROUGH-IN. FEED RECEPTACLE FROM LOAD SIDE OF GFCI-TYPE RECEPTACLE INDICATED.
3. INSTALL RECEPTACLE IN DIVIDED TWO-GANG BOX WITH LIGHT SWITCH.
4. PROVIDE FLOOR BOXES IN THIS SPACE WITH CARPET FLANGES. CONFIRM FLOOR BOX LOCATIONS IN FIELD PRIOR TO ROUGH-IN.
5. CORD REEL, MOUNTED TO STRUCTURE. PROVIDE NEMA L5-20R RECEPTACLE AND NEMA L5-20P TWIST-LOCK PLUGCAP TO POWER CORD REEL.
6. COORDINATE OUTLET LOCATION WITH ELEVATOR INSTALLER PRIOR TO ROUGH-IN.
7. PROVIDE ACOUSTICAL SEALANT.
8. HARDWIRE CONNECTIONS FOR DOOR HARDWARE POWER SUPPLY.

BCSC TOGETHER WE LEARN

CSO
8831 Keystone Crossing, Indianapolis, IN 46240
317.848.7800 | csoinc.net

© 2018 CSO Architects, Inc. All Rights Reserved

Howeler+Yoon Architecture
617.517.4101 howeleryoon.com

D&A #24063

R.E. Dimond and Associates, Inc.
Consulting Engineers
732 North Capitol Avenue
Indianapolis, IN 46204
Phone: (317) 634-4672
Fax: (317) 638-8725

PROJECT:
BARTHOLOMEW CONSOLIDATED SCHOOL CORPORATION
MAPLE GROVE ELEMENTARY
TIPTON LAKES BLVD, COLUMBUS, IN 47201

SCOPE DRAWINGS:
These drawings indicate the general scope of the project in terms of architectural design concept, the dimensions of the building, the locations of equipment and the type of structural, mechanical and electrical systems.
The drawings do not necessarily indicate or describe all work required for full performance and completion of the requirements of the Contract.
All work in the general scope indicated or described, the trade contractors shall furnish all items required for the proper execution and completion of the work.

REVISIONS:

2	Addendum #2	06/17/2025

ISSUE DATE	DRAWN BY	CHECKED BY
05/30/2025	LPC	TEH

DRAWING TITLE:
FIRST FLOOR PLAN - UNIT B - POWER

CERTIFIED BY:
TIMOTHY E. HILL REGISTERED No. PE19800083 STATE OF INDIANA PROFESSIONAL ENGINEER
05/30/2025

DRAWING NUMBER
E211B

PROJECT NUMBER
2024022

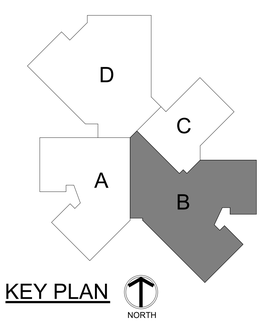

KEY PLAN

GENERAL NOTES:

1. SEE E001 FOR GENERAL NOTES.
2. SEE TELECOM DRAWING FOR "TV" OUTLET MOUNTING HEIGHT AND LOCATION.

PLAN NOTES:

1. COORDINATE LOCATION OF ELECTRICAL DEVICES IN THIS ROOM WITH TELECOMMUNICATIONS INSTALLER PRIOR TO ROUGH-IN.
2. PROVIDE RECEPTACLE CONCEALED IN EWC/BF HOUSING. COORDINATE LOCATION WITH EWC INSTALLER PRIOR TO ROUGH-IN. FEED RECEPTACLE FROM LOAD SIDE OF GFCI-TYPE RECEPTACLE INDICATED.
3. INSTALL RECEPTACLE IN DIVIDED TWO-GANG BOX WITH LIGHT SWITCH.
4. PROVIDE ALL FLOOR BOXES IN THIS SPACE WITH CARPET FLANGES. CONFIRM FLOOR BOX LOCATIONS IN FIELD PRIOR TO ROUGH-IN.
5. KILN EMERGENCY SHUT OFF, MUSHROOM-HEAD TYPE.
6. MECHANICALLY HELD CONTACTOR, 60A, 3-POLE IN NEMA 1 ENCLOSURE. WIRE TO EMERGENCY SHUT OFF SWITCH.
7. 60A, NON-FUSED DISCONNECT.
8. ADA DOOR PRESS-PLATE.
9. INSTALL FLUSH IN KNEE SPACE. CONCEAL CONDUIT BELOW FLOOR SLAB.
10. AUTOMATIC DOOR OPERATOR.
11. FLUSH MOUNT. SERVES KILN ROOM EXHAUST FAN EF-3 ON ROOF. SEE E220. LABEL: "KILN EXHAUST-LEAVE ON."
12. FLUSH MOUNT. SERVES ART ROOM EXHAUST FAN EF-4 ON ROOF. SEE E220. LABEL: "ART ROOM EXHAUST FAN."
13. SUSPEND TRANSFORMER AT LEAST 6'6" AFF.
14. NEMA 14-30R.
15. HARDWIRE CONNECTIONS FOR DOOR HARDWARE POWER SUPPLY. (1)

FIRST FLOOR - UNIT C - POWER

SCALE: 1/8" = 1'-0"

NORTH

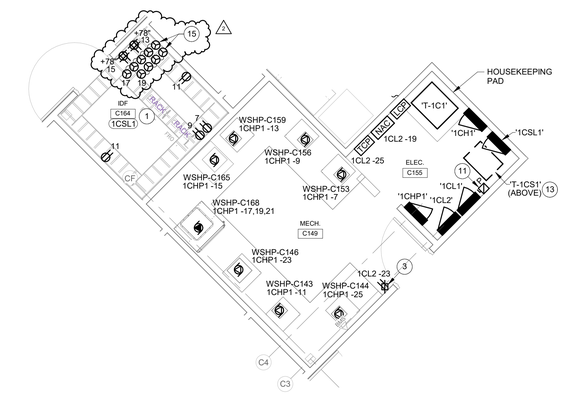

1 ENLARGED IDF C164 / MECH C149 / ELEC C155 - POWER

SCALE: 1/4" = 1'-0"

0 2 4 6 8 16 24 32

1 2 3 4

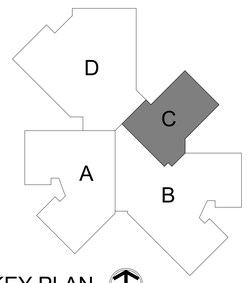

KEY PLAN

NORTH

BCSC TOGETHER WE LEARN

CSO
8831 Keystone Crossing, Indianapolis, IN 46240
317.848.7800 | csoinc.net

© 2018 CSO Architects, Inc. All Rights Reserved

Howeler+Yoon Architecture
617.517.4101 howeleryoon.com

D&A #24063

R.E. Dimond and Associates, Inc.
Consulting Engineers
732 North Capitol Avenue
Indianapolis, IN 46204
Phone: (317) 634-4672
Fax: (317) 638-8725

PROJECT:
BARTHOLOMEW CONSOLIDATED SCHOOL CORPORATION
MAPLE GROVE ELEMENTARY
TIPTON LAKES BLVD, COLUMBUS, IN 47201

SCOPE DRAWINGS:
These drawings indicate the general scope of the project. They generally indicate the extent of demolition required in the building, the major architectural elements and the type of structural, mechanical and electrical systems.
The drawings do not necessarily indicate or describe all work required for full performance and completion of the contract documents.
On the basis of the general scope indicated or described, the trade contractors shall furnish all items required for the proper execution and completion of the work.

REVISIONS:

2	Addendum #2	06/17/2025

ISSUE DATE	DRAWN BY	CHECKED BY
05/30/2025	LPC	TEH

DRAWING TITLE:
FIRST FLOOR PLAN - UNIT C - POWER

CERTIFIED BY:
TIMOTHY E. HILL REGISTERED No. PE19800083 STATE OF INDIANA PROFESSIONAL ENGINEER
05/30/2025

DRAWING NUMBER
E211C

PROJECT NUMBER
2024022

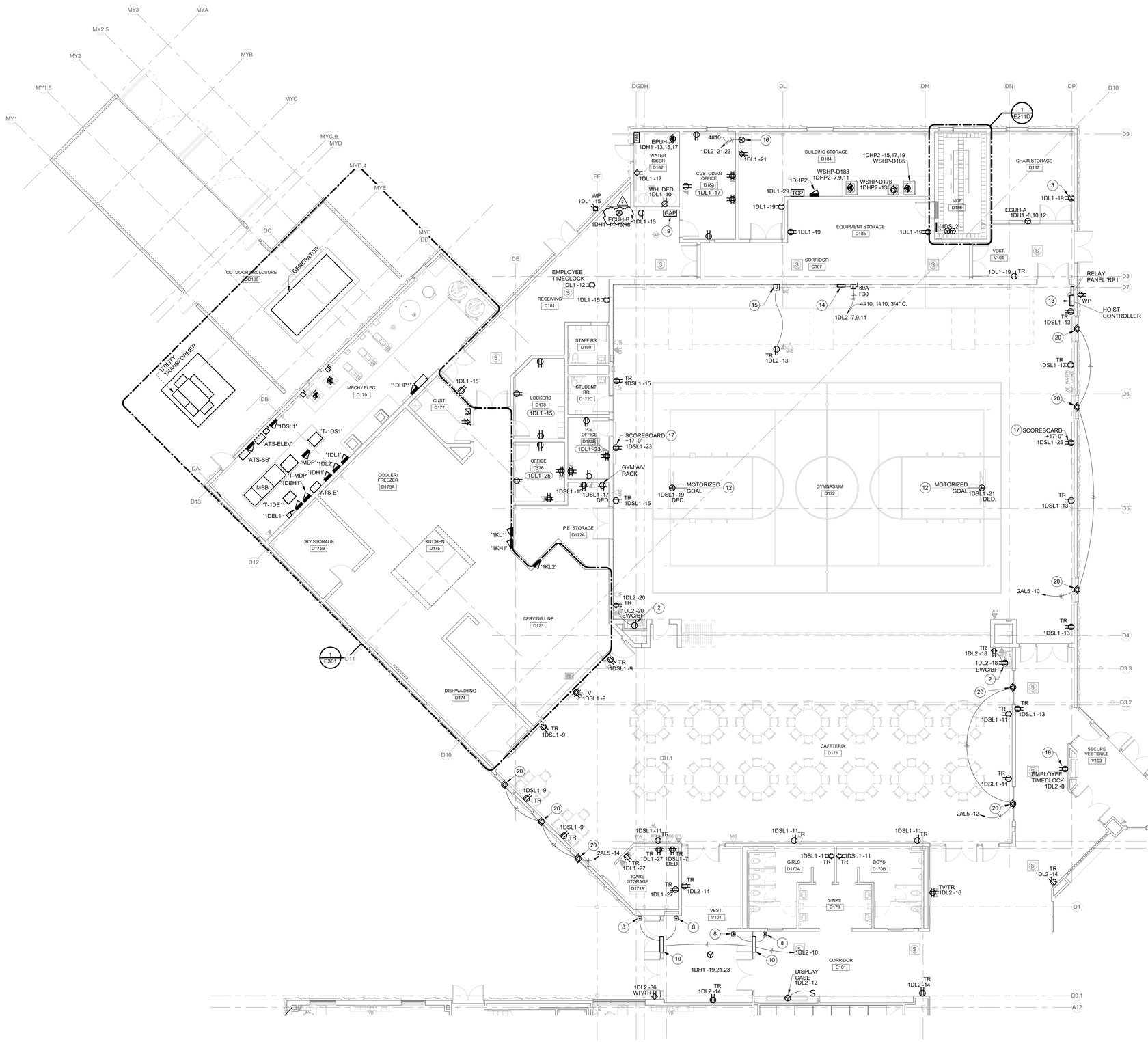

FIRST FLOOR - UNIT D - POWER

SCALE: 1/8" = 1'-0"

NORTH

GENERAL NOTES:

1. SEE E001 FOR GENERAL NOTES.
2. SEE TELECOM DRAWING FOR "TV" OUTLET MOUNTING HEIGHT AND LOCATION.
3. CONDUIT AND RACEWAY IN GYM AND CAFETERIA SHALL BE CONCEALED BELOW BOTTOM CHORD OF ROOF JOISTS.

PLAN NOTES:

1. COORDINATE LOCATION OF ELECTRICAL DEVICES IN THIS ROOM WITH TELECOMMUNICATIONS INSTALLER PRIOR TO ROUGH-IN.
2. PROVIDE RECEPTACLE CONCEALED IN EWC/BF HOUSING. COORDINATE LOCATION WITH EWC INSTALLER PRIOR TO ROUGH-IN. FEED RECEPTACLE FROM LOAD SIDE OF GFCI-TYPE RECEPTACLE INDICATED.
3. INSTALL RECEPTACLE IN DIVIDED TWO-GANG BOX WITH LIGHT SWITCH.
4. INSTALL TO REAR RAIL OF CABINET WHERE DIRECTED BY TELECOMMUNICATIONS INSTALLER.
5. NOT USED.
6. NOT USED.
7. NOT USED.
8. ADA DOOR PRESS-PLATE.
9. NOT USED.
10. AUTOMATIC DOOR OPERATOR.
11. NOT USED.
12. PROVIDE NEMA 14-20R RECEPTACLE FOR BASKETBALL HOIST & HEIGHT ADJUSTER MOTORS. PROVIDE 120V CIRCUITS AND ROUTE THROUGH RELAY PANEL 'RP1'.
13. MAIN GYM MOTORIZED HOIST CONTROLLER. PROVIDE CONTROL WIRING TO RELAY PANEL 'RP1'.
14. PROVIDE A 208V, 30-AMP, 3-POLE FUSED DISCONNECT IN A NEMA 1 ENCLOSURE FOR MOTORIZED BLEACHERS.
15. PROVIDE JUNCTION BOX AND TRAVELING CABLE TO RECEPTACLE MOUNTED TO FACE OF MOTORIZED BLEACHERS. SEE RETRACTABLE BLEACHER DETAIL.
16. CLOTHES DRYER. NEMA 14-30R.
17. COORDINATE OUTLET LOCATION IN THE FIELD WITH SCOREBOARD INSTALLER PRIOR TO ROUGH-IN.
18. RECEPTACLE FOR EMPLOYEE TIMECLOCK. COORDINATE LOCATION OF TIMECLOCK WITH OWNER IN FIELD PRIOR TO ROUGH-IN.
19. GENERATOR REMOTE ANNUNCIATOR PANEL.
20. ELECTRIC ROLLER SHADE - ALTERNATE BID.
21. HARDWIRE CONNECTIONS FOR DOOR HARDWARE POWER SUPPLY.

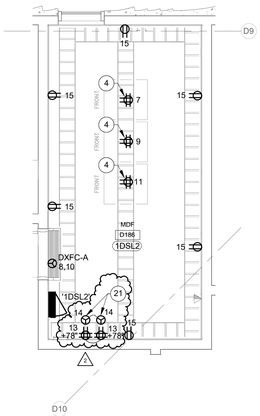

1 ENLARGED MDF D186 - POWER

SCALE: 1/4" = 1'-0"

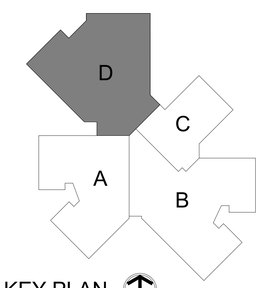

KEY PLAN

NORTH

BCSC TOGETHER WE LEARN

CSO
8831 Keystone Crossing, Indianapolis, IN 46240
317.848.7800 | csoinc.net

© 2018 CSO Architects, Inc. All Rights Reserved

Howeler+Yoon Architecture
617.517.4101 howeleryoon.com

D&A #24063
R.E. Dimond and Associates, Inc.
Consulting Engineers
732 North Capitol Avenue
Indianapolis, IN 46204
Phone: (317) 634-4672
Fax: (317) 638-8725

PROJECT:
BARTHOLOMEW CONSOLIDATED SCHOOL CORPORATION
MAPLE GROVE ELEMENTARY
TIPTON LAKES BLVD, COLUMBUS, IN 47201

SCOPE DRAWINGS:
These drawings indicate the general scope of the project in terms of architectural design concept, the dimensions of the building, the major architectural elements and the type of construction and mechanical and electrical systems.
The drawings do not necessarily indicate or describe all work required for full performance and completion of the requirements of the Contract.
Provide the balance of the general scope indicated or described, the trade contractor shall furnish all items required for the proper execution and completion of the work.

REVISIONS:

2	Addendum #2	06/17/2025

ISSUE DATE	DRAWN BY	CHECKED BY
05/30/2025	LPC	TEH

DRAWING TITLE:
FIRST FLOOR PLAN - UNIT D - POWER

CERTIFIED BY:
TIMOTHY E. HILL REGISTERED No. PE19800083 STATE OF INDIANA PROFESSIONAL ENGINEER
05/30/2025

DRAWING NUMBER
E211D

PROJECT NUMBER
2024022

GENERAL NOTES:

1. SEE E001 FOR GENERAL NOTES.
2. SEE TELECOM DRAWING FOR "TV" OUTLET MOUNTING HEIGHT AND LOCATION.

PLAN NOTES:

1. COORDINATE LOCATION OF ELECTRICAL DEVICES IN THIS ROOM WITH TELECOMMUNICATIONS INSTALLER PRIOR TO ROUGH-IN.
2. PROVIDE RECEPTACLE CONCEALED IN EWC/BF HOUSING. COORDINATE LOCATION WITH EWC INSTALLER PRIOR TO ROUGH-IN. FEED RECEPTACLE FROM LOAD SIDE OF GFCI-TYPE RECEPTACLE INDICATED.
3. INSTALL RECEPTACLE IN DIVIDED TWO-GANG BOX WITH LIGHT SWITCH.
4. MOUNT TRANSFORMER ABOVE.
5. HARDWIRE CONNECTIONS FOR DOOR HARDWARE POWER SUPPLY.

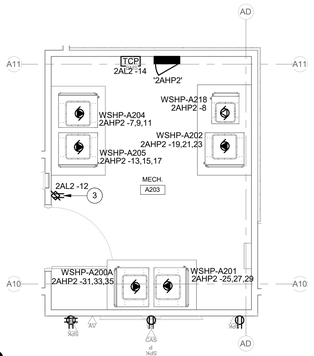

3 ENLARGED MECH A203 - POWER

SCALE: 1/4" = 1'-0"

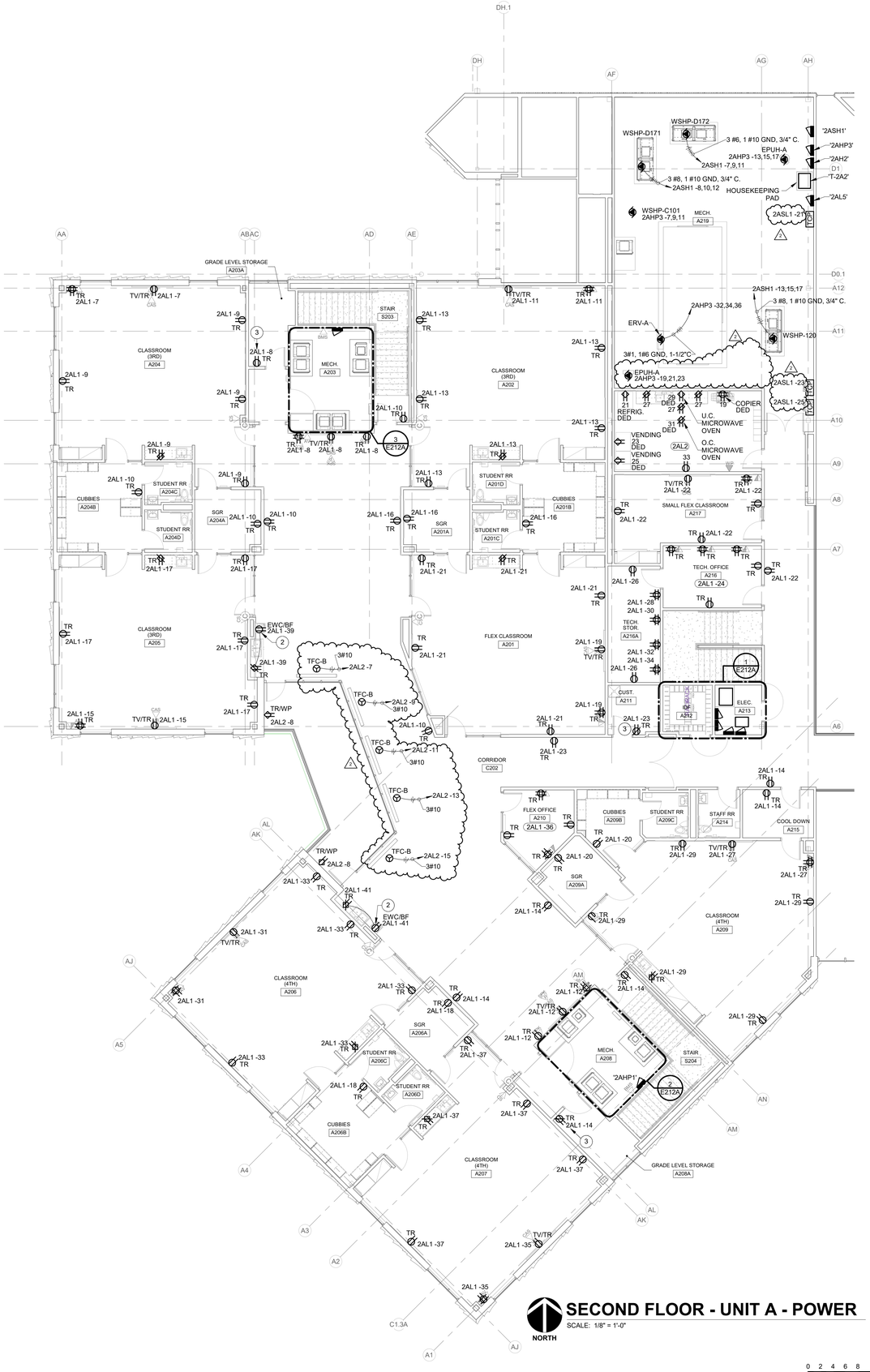

SECOND FLOOR - UNIT A - POWER

SCALE: 1/8" = 1'-0"

NORTH

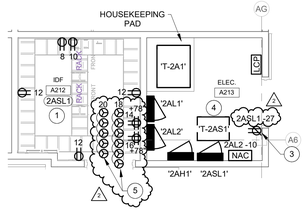

1 ENLARGED IDF A212 / ELEC A213 - POWER

SCALE: 1/4" = 1'-0"

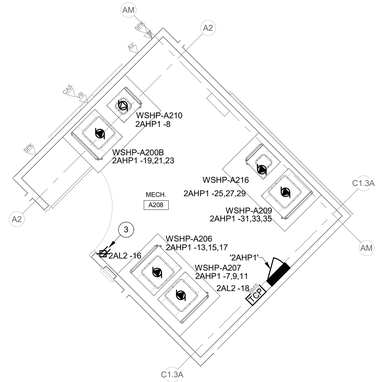

2 ENLARGED MECH A208 - POWER

SCALE: 1/4" = 1'-0"

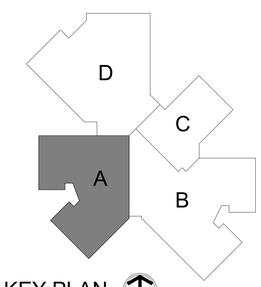

KEY PLAN

NORTH

BCSC TOGETHER WE LEARN

CSO
8831 Keystone Crossing, Indianapolis, IN 46240
317.848.7800 | csoinc.net

© 2018 CSO Architects, Inc. All Rights Reserved

Howeler+Yoon Architecture
617.517.4101 howeleryoon.com

D&A #24063

R.E. Dimond and Associates, Inc.
Consulting Engineers
732 North Capitol Avenue
Indianapolis, IN 46204
Phone: (317) 634-4672
Fax: (317) 638-8725

PROJECT:
BARTHOLOMEW CONSOLIDATED SCHOOL CORPORATION
MAPLE GROVE ELEMENTARY
TIPTON LAKES BLVD, COLUMBUS, IN 47201

SCOPE DRAWINGS:
These drawings indicate the general scope of the project in terms of architectural design concept, the dimensions of the building, the major architectural elements and the type of construction and finishes to be provided.
The drawings do not necessarily indicate or describe all work required for full performance and completion of the construction contract.
On the basis of the general scope indicated or described, the trade contractors shall furnish all items required for the proper execution and completion of the work.

REVISIONS:

2	Addendum #2	06/17/2025

ISSUE DATE	DRAWN BY	CHECKED BY
05/30/2025	LPC	TEH

DRAWING TITLE:
SECOND FLOOR PLAN - UNIT A - POWER

CERTIFIED BY:
TIMOTHY E. HILL REGISTERED No. PE19800083 STATE OF INDIANA PROFESSIONAL ENGINEER
06/30/2025

DRAWING NUMBER
E212A

PROJECT NUMBER
2024022

GENERAL NOTES:

1. SEE E001 FOR GENERAL NOTES.
2. SEE TELECOM DRAWING FOR "TV" OUTLET MOUNTING HEIGHT AND LOCATION.

PLAN NOTES:

1. COORDINATE LOCATION OF ELECTRICAL DEVICES IN THIS ROOM WITH TELECOMMUNICATIONS INSTALLER PRIOR TO ROUGH-IN.
2. PROVIDE RECEPTACLE CONCEALED IN EWC/BF HOUSING. COORDINATE LOCATION WITH EWC INSTALLER PRIOR TO ROUGH-IN. FEED RECEPTACLE FROM LOAD SIDE OF GFCI-TYPE RECEPTACLE INDICATED.
3. INSTALL RECEPTACLE IN DIVIDED TWO-GANG BOX WITH LIGHT SWITCH.
4. MOUNT TRANSFORMER ABOVE.
5. PROVIDE WIRE AND CONDUIT TO ATS-ELEV, SEE E301, TO ATS CONTACT POSITION AND PRE-TRANSFER SIGNALS.
6. HARDWIRE CONNECTIONS FOR DOOR HARDWARE POWER SUPPLY.

4 ENLARGED ELEC B226 - POWER

SCALE: 1/4" = 1'-0"

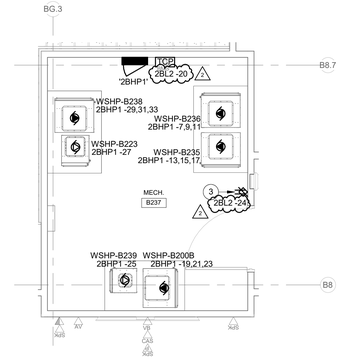

1 ENLARGED MECH B237 - POWER

SCALE: 1/4" = 1'-0"

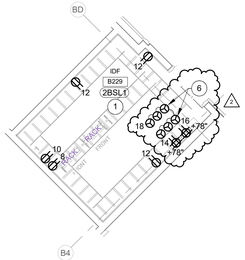

2 ENLARGED IDF B229 - POWER

SCALE: 1/4" = 1'-0"

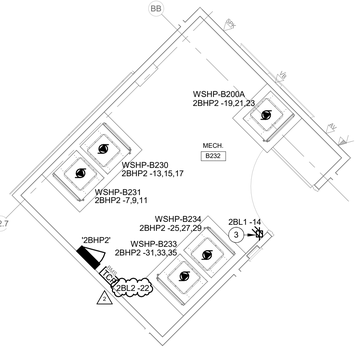

3 ENLARGED MECH B232 - POWER

SCALE: 1/4" = 1'-0"

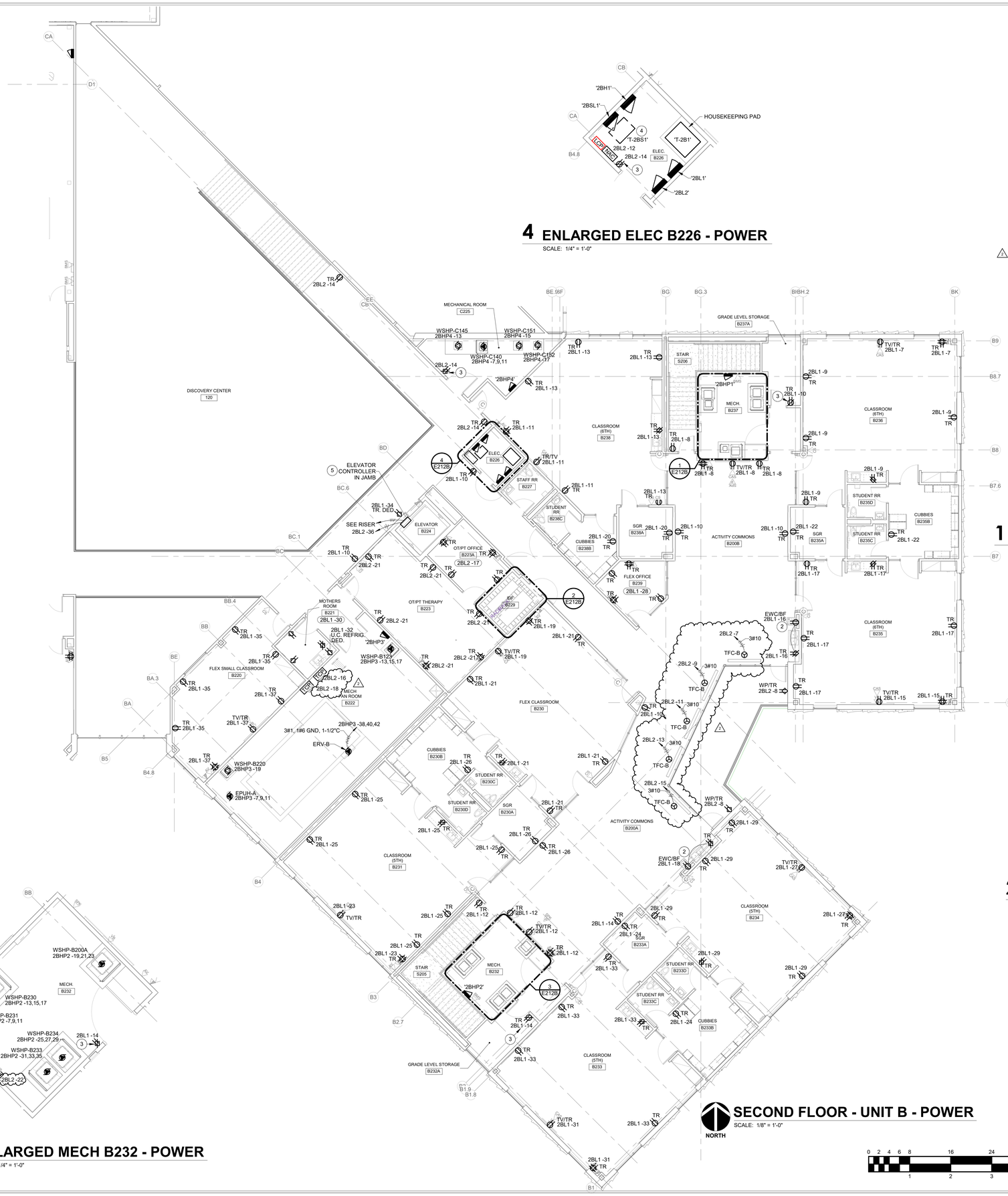

SECOND FLOOR - UNIT B - POWER

SCALE: 1/8" = 1'-0"

NORTH

0 2 4 6 8 16 24 32
1 2 3 4

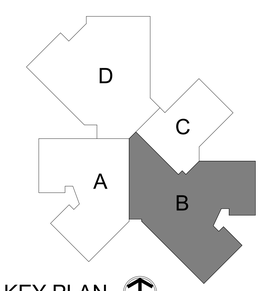

KEY PLAN

NORTH

BCSC TOGETHER WE LEARN

CSO
8831 Keystone Crossing, Indianapolis, IN 46240
317.848.7800 | csoinc.net

© 2018 CSO Architects, Inc. All Rights Reserved

Howeler+Yoon Architecture
617.517.4101 howeleryoon.com

D&A #24063

R.E. Dimond and Associates, Inc.
Consulting Engineers
732 North Capitol Avenue
Indianapolis, IN 46204
Phone: (317) 634-4672
Fax: (317) 638-8725

PROJECT:
BARTHOLOMEW CONSOLIDATED SCHOOL CORPORATION
MAPLE GROVE ELEMENTARY
TIPTON LAKES BLVD, COLUMBUS, IN 47201

SCOPE DRAWINGS:
These drawings indicate the general scope of the project in terms of architectural design concept, the dimensions of the building, the general construction materials and the type of structural, mechanical and electrical systems.
The drawings do not necessarily indicate or describe all work required for the performance and completion of the requirements of the Contract.
On the basis of the general scope indicated or described, the trade contractors shall furnish all items required for the proper execution and completion of the work.

REVISIONS:

2	Addendum #2	06/17/2025

ISSUE DATE	DRAWN BY	CHECKED BY
05/30/2025	LPC	TEH

DRAWING TITLE:
SECOND FLOOR PLAN - UNIT B - POWER

CERTIFIED BY:
TIMOTHY E. HILL REGISTERED No. PE19800083 STATE OF INDIANA PROFESSIONAL ENGINEER
06 / 30 / 2026

DRAWING NUMBER
E212B

PROJECT NUMBER
2024022

EXTERIOR LIGHT FIXTURE SCHEDULE

MARK	DESCRIPTION	MOUNTING	WATTS	CRI	COLOR	LUMENS	VOLTS	MANUFACTURER(S)	MARK
A	AREA FIXTURE. TYPE II DISTRIBUTION, 20-FOOT STRAIGHT SQUARE STEEL POLE, SECOND MODE VIBRATION DAMPENER, 5-INCH SQUARE, 0.188-INCH THICK, PROVISION FOR VIDEO SURVEILLANCE CAMERA WHERE INDICATED, COLOR SELECTED BY ARCHITECT FROM MANUFACTURER'S STANDARD CATALOG OF AVAILABLE COLORS. SEE DIVISION 26 SECTION "EXTERIOR LIGHTING" FOR CAMERA AND LIGHT SPILL REQUIREMENTS	POLE	39 W	70	4000K	5500	120-277V	BEACON VIPER AREA OPTIC STRIKE SERIES LITHONIA DSX SERIES MCGRAW-EDISON GALN GALLEON II SERIES LUMECON LDS-SAL SERIES	A
A-HSS	SAME AS 'A' EXCEPT EQUIPPED WITH HOUSE-SIDE SHIELD, BACK-SIDE-SIDE.	POLE	39 W	70	4000K	5500	120-277V		A-HSS
B	SAME AS 'A' EXCEPT TYPE III DISTRIBUTION.	POLE	39 W	70	4000K	5500	120-277V		B
C	SAME AS 'A' EXCEPT OUTPUT AND TYPE III DISTRIBUTION.	POLE	84 W	70	4000K	10000	120-277V		C
D	SAME AS 'A' EXCEPT OUTPUT AND TYPE IV DISTRIBUTION.	POLE	112 W	70	4000K	15000	120-277V		D
E	SAME AS 'A' EXCEPT OUTPUT AND TYPE V DISTRIBUTION.	POLE	39 W	70	4000K	10000	120-277V		E
FG	FLAGPOLE FIXURE, 9-IN INDIRECT, WET LOCATION LISTED. FINISH TO BE SELECTED BY ARCHITECT FROM CATALOG OF STANDARD FINISHES.	FLAGPOLE	49 W	80	4000K	3500	120-277V	KIRLIN LWR-09490 SERIES	FG
FM-3E	36-IN NOMINAL LENGTH, 2.5-IN MAXIMUM HEIGHT, VANDAL RESISTANT, FULL CUT-OFF EGRESS LIGHT. FINISH TO BE SELECTED BY ARCHITECT FROM CATALOG OF STANDARD FINISHES.	MULLION	30 W	80	4000K	3000	120-277V	LUMINAIRE LIGHTING BLADE BLD SERIES	FM-3E
FM-6E	SAME AS 'FM-3E' EXCEPT 72-IN NOMINAL LENGTH	MULLION	55 W	80	4000K	6000	120-277V		FM-6E

NOTES:
CONTRACTOR SHALL SET OUTPUT AND COLOR TEMPERATURE OF ADJUSTABLE FIXTURES AS DIRECTED IN THE FIELD BY THE ENGINEER.

INTERIOR LIGHT FIXTURE SCHEDULE

MARK	DESCRIPTION	MOUNTING	WATTS	CRI	COLOR	LUMENS	VOLTS	MANUFACTURER(S)	MARK
F01-8	LINEAR 2.5-INCH WIDE BY 8-FT LENGTH. COMPATIBLE WITH ARMSTRONG WOODWORKS CEILING. WHITE DIFFUSER, 0-10V DIMMING TO 10-PERCENT, NON-IC RATED. COLOR SELECTED BY ARCHITECT FROM MANUFACTURER'S CATALOG OF STANDARD FINISHES.	SURFACE	57 W	80	4000K	725/FT	120-277V	AXIS SLATE SERIES ALPHABET ZETA SERIES LUMENWERX SHALO ULTRA SERIES ALW LPX2R SERIES	F01-8
F01-8E	SAME AS 'F01-8', EXCEPT WITH GENERATOR TRANSFER DEVICE	SURFACE	57 W	80	4000K	725/FT	120-277V		F01-8E
F02-8	LINEAR 4-INCH WIDE BY 8-FT LENGTH. COMPATIBLE WITH ARMSTRONG METALWORKS CEILING. WHITE DIFFUSER, 0-10V DIMMING TO 10-PERCENT, NON-IC RATED.	RECESSED	78 W	80	4000K	1200/FT	120-277V	AXIS BEAM 4 SERIES LUMENWERX VIA 4 SERIES PINNACLE EV4D SERIES ALW LPX4R SERIES	F02-8
F02-8E	SAME AS 'F02-8' EXCEPT WITH GENERATOR TRANSFER DEVICE	RECESSED	78 W	80	4000K	1200/FT	120-277V		F02-8E
F03	PERIMETER RECESSED 2-IN WIDE BY LENGTH INDICATED, 2-1/2" REGRESSED LENS, PROVIDE EMERGENCY CIRCUIT AND GENERATOR TRANSFER DEVICE WHERE INDICATED.	RECESSED	3.1 W/FT	80	4000K	375/FT	120-277V	FOCAL POINT FSM2PR SERIES FINELITE HP2WS SERIES PRUDENTIAL BPRO2 SERIES AXIS BEAM 3LED SERIES ALW LPX2P SERIES	F03
F04-4	LINEAR 4-INCH WIDE BY 8-FT LENGTH. WHITE DIFFUSER, 0-10V DIMMING TO 10-PERCENT, NON-IC RATED.	RECESSED	29 W	80	4000K	725/FT	120-277V	FINELITE HP-4 R SERIES FOCAL POINT FSM4L SERIES PINNACLE EV4D SERIES ALW LPX4R SERIES	F04-4
F04-4E	SAME AS 'F04-4E' EXCEPT WITH GENERATOR TRANSFER DEVICE	RECESSED	29 W	80	4000K	725/FT	120-277V		F04-4E
F04-10E	SAME AS 'F4-4' EXCEPT 10-FT LENGTH, AND WITH GENERATOR TRANSFER DEVICE.	RECESSED	71 W	80	4000K	725/FT	120-277V		F04-10E
F05-8	SAME AS 'F01-8', EXCEPT MOUNTING.	PENDENT	57 W	80	4000K	725/FT	120-277V	AXIS SLATE PENDANT SERIES ALPHABET ZETA SERIES LUMENWERX SHALO ULTRA SERIES PINNACLE EDGE EX1D SERIES ALW LPX2D SERIES	F05-8
F06	LINEAR DIRECT 4-INCH WIDE BY 7'-10". BAFFLE CEILING. AIRCRAFT CABLE, WHITE DIFFUSER, 0-10V DIMMING TO 10-PERCENT, COLOR SELECTED BY ARCHITECT FROM MANUFACTURER'S CATALOG OF STANDARD FINISHES.	PENDENT	7.1 W/FT	80	4000K	1000/FT	120-277V	FINELITE HP-4 D SERIES FOCAL POINT FSM4LS SERIES PINNACLE EDGE EX4D SERIES ALW LPX4D SERIES	F06
F06E	SAME AS 'F06' EXCEPT WITH GENERATOR TRANSFER DEVICE	PENDENT	7.1 W/FT	80	4000K	1000/FT	120-277V		F06E
F07-12	LINEAR 4-INCH WIDE BY 12-FT WHITE DIFFUSER, INTEGRAL OCCUPANCY SENSOR, 0-10V DIMMING TO 10-PERCENT, NON-IC RATED, COLOR SELECTED BY ARCHITECT FROM MANUFACTURER'S CATALOG OF STANDARD FINISHES.	PENDENT	85 W	80	4000K	800/FT	120-277V	FINELITE HP-4 D SERIES FOCAL POINT FSM4LS SERIES PINNACLE EX4D SERIES ALW LPX4D SERIES	F07-12
F07-12E	SAME AS 'F07-12' EXCEPT WITH GENERATOR TRANSFER DEVICE.	PENDENT	85 W	80	4000K	800/FT	120-277V		F07-12E
F08	SPECIALTY FIXTURE. LINEAR DIRECT/INDIRECT. ONE FIXTURE WITH SIX PARTS. (1) 12-FT, (2) 8-FT, (3) 4-FT LENGTHS. POWER OVER SUSPENSION WIRES. WHITE DIFFUSER, 0-10V DIMMING TO 10-PERCENT, LOCATION AND SUSPENSION LENGTH AS DIRECTED IN THE FIELD BY THE ARCHITECT.	PENDENT	160 W	80	4000K	15000	120-277V	SPI PAVO 2 HORIZONTAL SERIES ARANCIA FRICI 2 SERIES LIGHTING ELEMENTS HALO TUBE HS SERIES	F08
F30	OPEN DOWNLIGHT, 2-INCH DIAMETER APERTURE. CLEAR SEMI-SPECULAR REFLECTOR, 0-10V DIMMING TO 10-PERCENT, NON-IC RATED. FLANGELESS MUD-IN TRIM.	RECESSED	13 W	80	4000K	1000	120-277V	GOTHAM EVO2 SERIES PORTFOLIO LD2B SERIES PRESCOLITE D2LED SERIES WILLIAMS 2DR SERIES	F30
F32	OPEN DOWNLIGHT, 6-INCH DIAMETER APERTURE. CLEAR SEMI-SPECULAR REFLECTOR, 0-10V DIMMING TO 10-PERCENT, NON-IC RATED. SELF-FLANGED WHITE TRIM.	RECESSED	14.5 W	80	4000K	1500	120-277V	HALO COMMERCIAL HC6 SERIES LITHONIA LDN6 SERIES PRESCOLITE LC6 SERIES WILLIAMS 6DR SERIES	F32
F32E	SAME AS 'F32' EXCEPT WITH GENERATOR TRANSFER DEVICE	RECESSED	14.5 W	80	4000K	1500	120-277V		F32E
F33	SAME AS 'F32' EXCEPT WITH FLANGELESS MUD-IN TRIM.	RECESSED	14.5 W	80	4000K	1500	120-277V		F33
F33E	SAME AS 'F33' EXCEPT WITH GENERATOR TRANSFER DEVICE	RECESSED	14.5 W	80	4000K	1100	120-277V		F33E
F34	6-INCH ROUND SURFACE DOWNLIGHT, WET LOCATION LISTED, FIELD PAINTED TO SOFFIT COLOR.	RECESSED	12.3 W	80	4000K	1000	120-277V	PRESCOLITE LBSD-6RD SERIES JUNO JSF-7IN SERIES HALO SMX6 SERIES ASD LIGHTING MP SERIES	F34
F35	SAME AS 'F32' EXCEPT WITH FLANGELESS MUD-IN TRIM AND 26 DEGREE SLOPED CEILING ADAPTER.	RECESSED	14.5 W	80	4000K	1500	120-277V		F35
F60	4-FOOT LENSED INDUSTRIAL STRIP, FORMED STEEL HOUSING, WHITE FINISH, SEMI-FROST ACRYLIC DIFFUSER.	SURFACE/ CHAIN HUNG	48 W	80	4000K	5000	120-277V	COLUMBIA MPS SERIES LITHONIA ZL1D SERIES METALUX SNLED SERIES WILLIAMS FS-4-LS SERIES	F60
F60E	SAME AS 'F60' EXCEPT WITH GENERATOR TRASNFER DEVICE	SURFACE/ CHAIN HUNG	48 W	80	4000K	5000	120-277V		F60E
F80	HIGH BAY FIXTURE. WHITE FINISH, MEDIUM DISTRIBUTION, FROSTED GLASS OPTIC, WIRE GUARD, SAFETY HOOK, AND 3-FOOT CHAIN.	SUSPENDED	175 W	80	4000K	24000	120-277V	HUBBELL LBX SERIES METALUX SSLED SERIES HOLOPHANE PHZ SERIES	F80
F80E	SAME AS 'F80', EXCEPT WITH GENERATOR TRANSFER DEVICE.	SUSPENDED	175 W	80	4000K	24000	120-277V		F80E
F82	4-FOOT LENSED INDUSTRIAL STRIP, WET-LOCATION LISTED. GASKETED, NON-METALLIC HOUSING, RIBBED FROSTED ACRYLIC SHIELDING, STAINLESS STEEL LATCHES.	SURFACE WALL	47 W	80	4000K	4850	120-277V	COLUMBIA LXEM SERIES METALUX 4VT2 SERIES LITHONIA FEM SERIES WILLIAMS 96-4 SERIES	F82
F90	1 BY 4-FOOT FLAT PANEL, ACRYLIC LENS, EDGE-LIT, 0-10V DIMMING TO 10-PERCENT, ADJUSTABLE OUTPUT AND COLOR TEMPERATURE.	RECESSED	22/31/41 W	80	3500/4000 /5000K	2400/3300/4400	120-277V	COLUMBIA SRP14 SERIES LITHONIA CPANL14 SERIES METALUX 14FP SERIES ABOVE ALL SEFLP14 SERIES	F90
F91	2 BY 2-FOOT FLAT PANEL, ACRYLIC LENS, EDGE-LIT, 0-10V DIMMING TO 10-PERCENT, ADJUSTABLE OUTPUT AND COLOR TEMPERATURE.	RECESSED	22/31/41 W	80	3500/4000 /5000K	2400/3300/4400	120-277V	COLUMBIA SRP22 SERIES LITHONIA CPANL22 SERIES METALUX 22FP SERIES ABOVE ALL SEFLP22 SERIES	F91
F91C	2 BY 2-FOOT RGBW FLAT PANEL, ACRYLIC LENS, EDGE-LIT, 0-10V DIMMING TO 10-PERCENT, COLOR CHANGING RGBW WITH REMOTE.	RECESSED	32 W	80	RGBW	3200	120-277V	BARRON RGBWFP22	F91C
F91E	SAME AS 'F91' EXCEPT WITH GENERATOR TRANSFER DEVICE	RECESSED	32 W	80	4000K	3200	120-277V		F91E
X1CC	ARCHITECTURAL EDGE LIT EXIT SIGN, CLEAR PANEL, SINGLE FACE, ALUMINUM HOUSING.	RECESSED CEILING	5 W		GREEN	N/A	120-277V	SURE-LITES ARCEL SERIES	X1CC
X1CM	ARCHITECTURAL EDGE LIT EXIT SIGN, MIRRORED PANEL, SINGLE FACE, ALUMINUM HOUSING.	RECESSED CEILING	5 W		GREEN	N/A	120-277V	SURE-LITES ARCEL SERIES	X1CM
X1CM2	ARCHITECTURAL EDGE LIT EXIT SIGN, DOUBLE FACE WITH MIRRORED PANEL, ALUMINUM HOUSING, CHEVRONS AS INDICATED.	RECESSED CEILING	5 W		GREEN	N/A	120-277V	SURE-LITES ARCEL SERIES	X1CM2
X1EM	ARCHITECTURAL EDGE LIT EXIT SIGN, MIRRORED PANEL, ALUMINUM HOUSING, FLAG/END MOUNTED.	SURFACE WALL	5 W		GREEN	N/A	120-277V	SURE-LITES ARCEL SERIES	X1EM
X1MM	ARCHITECTURAL EDGE LIT EXIT SIGN, MULLION/INVERTED MOUNT, MIRRORED PANEL, ALUMINUM HOUSING.	SURFACE MULLION	5 W		GREEN	N/A	120-277V	SURE-LITES ARCEL SERIES	X1MM
X1WC	ARCHITECTURAL EDGE LIT EXIT SIGN, CLEAR PANEL, ALUMINUM HOUSING.	SURFACE WALL	5 W		GREEN	N/A	120-277V	SURE-LITES ARCEL SERIES	X1WC
X2W	DIE-CAST ALUMINUM EXIT SIGN, VANDAL RESISTANT, WHITE HOUSING.	SURFACE WALL	5 W		GREEN	N/A	120-277V	SURE-LITES UX SERIES LITHONIA EXTREME SERIES DUAL-LITE SEWL SERIES LIFE SAFETY LSINDWLEZU SERIES	X2W
X3W	DIE-CAST ALUMINUM EXIT SIGN, WHITE HOUSING.	SURFACE WALL	5 W		GREEN	N/A	120-277V	SURE-LITES CX SERIES LITHONIA SIGNATURE SERIES DUAL-LITE SE SERIES LIFE SAFETY LSXDC3G SERIES	X3W

LIGHTING CONTROL SCHEDULE

AREA	DESCRIPTION
ACTIVITY COMMONS	• DURING SCHOOL DAY: LIGHTS ON 100%. INSTRUCTOR HAS LOCAL CONTROL. • AFTER HOURS: LIGHTS CONTROLLED BY OCCUPANCY SENSORS. INSTRUCTOR HAS LOCAL CONTROLS.
CORRIDORS, HALLWAYS, AND OTHER CIRCULATION	• DURING SCHOOL DAY: LIGHTS ON 100%. • AFTER HOURS: LIGHTS CONTROLLED BY OCCUPANCY SENSORS.
CLASSROOMS	• STAND-ALONE WALLBOX DIMMERS, OCCUPANCY SENSORS, AND POWER PACKS. • 2 LIGHTING ZONES.
RESTROOMS	• STAND-ALONE OCCUPANCY SENSOR AND POWER PACKS.
CAFETERIA	• DURING SCHOOL DAY: LIGHTS ON 100% INSTRUCTOR HAS LOCAL CONTROL BY TOUCH SCREEN IN CAFETERIA. • AFTER HOURS: LIGHTING IS CONTROLLED BY OCCUPANCY SENSORS.
DISCOVERY CENTER	• DURING SCHOOL DAY: LIGHTS ON 100% INSTRUCTOR HAS LOCAL CONTROL BY TOUCH SCREEN IN MEDIA CENTER OFFICE. • AFTER HOURS: LIGHTS CONTROLLED BY OCCUPANCY SENSORS.
STORAGE	• STAND-ALONE OCCUPANCY SENSOR, POWER PACK, AND MANUAL SWITCHES.
MECHANICAL AND ELECTRICAL ROOMS	• MANUAL CONTROL ONLY.
OFFICES AND CONFERENCE ROOMS	• STAND-ALONE WALLBOX DIMMERS, OCCUPANCY SENSORS, AND POWER PACKS.
GYMNASIUM	• DURING SCHOOL DAY: LIGHTS ON 100% INSTRUCTOR HAS LOCAL MANUAL SWITCHES. • AFTER HOURS: OCCUPANCY SENSOR CONTROLS. INSTRUCTOR HAS LOCAL MANUAL SWITCHES.
EXTERIOR AREA LIGHTING	• TIMECLOCK AND PHOTOCELL CONTROL. • ON AT DUSK; OFF START OF CURFEW. • ON AT END OF CURFEW; OFF AT DAWN.
EXTERIOR SOFFIT, WALL PACK, AND FLAGPOLE LIGHTS.	• PHOTOCELL CONTROL. • ON DUSK-TO-DAWN.

NOTE:
- ALL OCCUPANCY SENSORS TO BE CEILING MOUNT UNLESS OTHERWISE NOTED.
- MULTIPLE OCCUPANCY SENSORS WITHIN A ROOM OR CORRIDOR SHALL BE WIRED TOGETHER TO CONTROL ALL OF THE LIGHTS WITHIN THAT SPACE, UNLESS OTHERWISE NOTED.
- TIME DELAY SHALL BE 30 MINUTES UNLESS NOTED OTHERWISE.

FLOOR BOX SCHEDULE

MARK (TAG)	CAPACITY	MANUFACTURER MODEL NUMBER	APPLICATION	CONSTRUCTION	COVER	FINISH	POWER DEVICES & PLATES	IT DEVICES & PLATES	CONDUITS
A	2-GANG	HUBBELL# CFB2G30CR (EPOXY COATED)	ON-GRADE	DIE CAST ALUM. COVER	RECTANGULAR (SURF.): 24GCCVRCPT	ALU (ALUMINUM)/ BK (BLACK)/ BRS (BRASS)/ BRZ(BRONZE)/ NK (SATIN NICKEL)	(1) TAMPER-RESISTANT DUPLEX	(1) DATA (KEYSTONE) #FBMP6KS	(1) 3/4" POWER (1) 1-1/4" IT

NOTES:

1. NO CONDUIT LARGER THAN 1" SHALL BE INSTALLED IN FLOOR SLAB. ALL CONDUITS LARGER THAN 1" SHALL BE ROUTED BELOW THE FLOOR SLAB.
2. COORDINATE INSTALLATION OF FLOOR BOXES WITH GENERAL TRADES AND FLOOR CONSTRUCTION. IN SOME CASES, THE BOX IS DEEPER THAN THE CONCRETE SLAB.
3. ON-GRADE BOXES SHALL INCLUDE A FUSION-BONDED EPOXY PAINT FINISH TO PROTECT AGAINST CORROSION AND SHALL BE RATED FOR ON-GRADE USE.
4. COVER FINISH SHALL BE VERIFIED WITH ARCHITECT.
5. FLOOR BOXES SHALL BE UL 514A AND SCRUB WATER COMPLIANT.
7. COVERS SHALL ALLOW 180 DEGREE OPENING WITH TWO LARGE CABLE EGRESS DOORS.
8. PROVIDE NECESSARY DEVICE PLATES INSIDE BOX.
9. FLOOR BOXES SHALL BE HUBBELL "SYSTEM ONE" OR EQUAL BY WIREMOLD.
10. VERIFY EXACT LOCATION OF FLOOR BOXES WITH ARCHITECT PRIOR TO ROUGH-IN.
11. CONFIRM FLOOR TYPE AND FINISH PRIOR TO RELEASING ORDER.

BCSC
TOGETHER WE LEARN

CSO
8831 Keystone Crossing, Indianapolis, IN 46240
317.848.7800 | csoinc.net

© 2018 CSO Architects, Inc. All Rights Reserved

Höweler+Yoon Architecture
617.517.4101 howeleryoon.com

D&A #24063
R.E. Dimond and Associates, Inc.
Consulting Engineers
732 North Capitol Avenue
Indianapolis, IN 46204
Phone: (317) 634-4672
Fax: (317) 638-8725

PROJECT:
BARTHOLOMEW CONSOLIDATED SCHOOL CORPORATION
MAPLE GROVE ELEMENTARY
TIPTON LAKES BLVD, COLUMBUS, IN 47201

SCOPE DRAWINGS:
These drawings indicate the general scope of the project in terms of architectural design concept, the dimensions of the building, the major architectural elements and the type of structural, mechanical and electrical systems.
The drawings do not necessarily indicate or describe all work required for full performance and completion of the requirements of the Contract.
On the basis of the general scope indicated or described, the trade contractors shall furnish all items required for the proper execution and completion of the work.

REVISIONS:

1	Addendum #1	06/10/2025
2	Addendum #2	06/17/2025

ISSUE DATE	DRAWN BY	CHECKED BY
05/30/2025	LPC	TEH

DRAWING TITLE:
SCHEDULES - ELECTRICAL

CERTIFIED BY:
TIMOTHY E. HILL REGISTERED No. PE19800083 STATE OF INDIANA PROFESSIONAL ENGINEER
05/30/2025

DRAWING NUMBER
E601

PROJECT NUMBER
2024022

1CL1 PANELBOARD SCHEDULE

LOCATION : ELEC. C155 | **SCCR (AMPS RMS SYMM):** 10,000 | **SERVICE :** 208Y/120V 3Φ 4-Wire+Ground | **MAIN:** MCB
MOUNTING: SURFACE | **NEMA:** 1 | **AMP:** 200 A

CKT	DESCRIPTION	NOTE	AMP	POLE	A	B	C	POLE	AMP	NOTE	DESCRIPTION	CKT
1	SPARE		20 A	1	0 / 0			1	20 A		SPARE	2
3	SPARE		20 A	1		0 / 0		1	20 A		SPARE	4
5	SPARE		20 A	1			0 / 0	1	20 A		SPARE	6
7	RECEPT - TREASURER C167		20 A	1	540 / 1080			1	20 A		RECEPTS - SLP OFFICE C145	8
9	RECEPT - RECORDS C154		20 A	1		180 / 720		1	20 A		RECEPTS - CLINIC C146	10
11	RECEPTS - RECEPTION C168		20 A	1			1080 / 360	1	20 A		COUNTER RECEPTS - CLINIC C146	12
13	RECEPT FAMILY ROOM C166		20 A	1	1260 / 500			1	20 A		REFRIG - CLINIC C146	14
15	RECEPT ASSISTANT PRINCIPAL C165		20 A	1		1080 / 540		1	20 A		RECEPTS - CLINIC EXAM C146B, CLINIC RR...	16
17	RECEPT COUNSELOR C162		20 A	1			900 / 360	1	20 A		AV RACK - IDF C164	18
19	RECEPT Room C160, C106		20 A	1	1080 / 180			1	20 A		RECEPTS - CUST C161, CLOSET C163, REC C155	20
21	RECEPT PRINCIPAL C159		20 A	1		1980 / 360		1	20 A		COUNTER RECEPTS - STAFF	22
23	RECEPT LARGE CONFERENCE C153		20 A	1			900 / 500	1	20 A		REFRIGERATOR - STAFF	24
25	RECEPT LARGE CONFERENCE C153		20 A	1	720 / 540			1	20 A		RECEPTS - STAFF WORKROOM C143	26
27	RECEPT LARGE CONFERENCE C153		20 A	1		180 / 540		1	20 A		COUNTER RECEPTS - STAFF WORKROOM C143	28
29	RECEPT WELLNESS FLEX OFFICE C152		20 A	1			1260 / 500	1	20 A		COPIER - STAFF WORKROOM C143	30
31	SPARE		20 A	1	0 / 1080			1	20 A		RECEPTS - SRO C141	32
33	SPARE		20 A	1		0 / 0		1	20 A		SPARE	34
35	RECEPT WELLNESS CONFERENCE C151		20 A	1			900 / 0	1	20 A		SPARE	36
37	RECEPT WELLNESS FLEX OFFICE C150		20 A	1	1080 / 180			1	20 A		WASHER - CLINIC C146	38
39	RECEPT WELLNESS FLEX OFFICE C148		20 A	1		1080 / 500		2	30 A		DRYER - CLINIC C146	40
41	RECEPT - CORRIDOR ADMIN		20 A	1			1440 / 500					42
				TOTALS :	17707 VA	16687 VA	16323 VA					

TOTAL CONNECTED LOAD (VA) : 50716 VA **TOTAL CONNECTED LOAD (AMPS) :** 141 A

REMARKS:
FEED-THROUGH LUGS.

NOTES:

1CH1 PANELBOARD SCHEDULE

LOCATION : ELEC. C155 | **SCCR (AMPS RMS SYMM):** 35,000 | **SERVICE :** 480Y/277V 3Φ 4-Wire+Ground | **MAIN:** MLO
MOUNTING: SURFACE | **NEMA:** 1 | **AMP:** 200 A

CKT	DESCRIPTION	NOTE	AMP	POLE	A	B	C	POLE	AMP	NOTE	DESCRIPTION	CKT
1	SPARE		20 A	1	0 / 0			1	20 A		SPARE	2
3	SPARE		20 A	1		0 / 0		1	20 A		SPARE	4
5	SPARE		20 A	1			0 / 0	1	20 A		SPARE	6
7	LTG - ADMIN - SOUTHEAST OFFICES		20 A	1	1472 / 1000							8
9	LTG - ADMIN - RECEPTION, NORTHEAST OFFICES		20 A	1		2270 / 1000		3	15 A		ECUH-C - VEST V103	10
11	LTG - ADMIN - CENTER OFFICES, MECH C149		20 A	1			1370 / 1000					12
13	LTG - ADMIN - CORRIDORS		20 A	1	624 / 0			1	--		PROVISION	14
15	LTG - DISCOVERY CENTER - UNIT C		20 A	1		87 / 0		1	--		PROVISION	16
17	PROVISION		--	1			0 / 0	1	--		PROVISION	18
19	PROVISION		--	1	0 / 0			1	--		PROVISION	20
21	PROVISION		--	1		0 / 0		1	--		PROVISION	22
23	PROVISION		--	1			0 / 0	1	--		PROVISION	24
25	PROVISION		--	1	0 / 0			1	--		PROVISION	26
27	PROVISION		--	1		0 / 0		1	--		PROVISION	28
29	PROVISION		--	1			0 / 0	1	--		PROVISION	30
31	PROVISION		--	1	0 / 0			1	--		PROVISION	32
33	PROVISION		--	1		0 / 0		1	--		PROVISION	34
35	PROVISION		--	1			0 / 0	1	--		PROVISION	36
37					17707 / 0							38
39	TRANSFORMER 'T-1C1'		125 A	3		16687 / 0		3	30 A		S.P.D.	40
41							16323 / 0					42
				TOTALS :	20803 VA	20043 VA	18693 VA					

TOTAL CONNECTED LOAD (VA) : 59539 VA **TOTAL CONNECTED LOAD (AMPS) :** 72 A

REMARKS:

NOTES:

1CL2 PANELBOARD SCHEDULE

LOCATION : ELEC. C155 | **SCCR (AMPS RMS SYMM):** 10,000 | **SERVICE :** 208Y/120V 3Φ 4-Wire+Ground | **MAIN:** MLO
MOUNTING: SURFACE | **NEMA:** 1 | **AMP:** 200 A

CKT	DESCRIPTION	NOTE	AMP	POLE	A	B	C	POLE	AMP	NOTE	DESCRIPTION	CKT
1	SPARE		20 A	1	0 / 0			1	20 A		SPARE	2
3	SPARE		20 A	1		0 / 0		1	20 A		SPARE	4
5	SPARE		20 A	1			0 / 0	1	20 A		SPARE	6
7	TFC - ART C140		25 A	1	2000 / 720			1	20 A		RECEPT WELLNESS RECEPTION C144	8
9	TFC - ART C140		25 A	1		2000 / 720		1	20 A		RECEPTS - FRONT DESK RECEPTION C168	10
11	RECEPTS - ART C140		20 A	1			540 / 1080	1	20 A		RECEPTS - FRONT DESK RECEPTION C168	12
13	RECEPTS - ART C140		20 A	1	1080 / 720			1	20 A		COUNTER RECEPTS - RECEPTION C168	14
15	COUNTER RECEPTS - ART C140		20 A	1		360 / 180		1	20 A		RECEPT - EXTERIOR	16
17	COUNTER RECEPTS - ART C140		20 A	1			360 / 4767					18
19	NAC - ELEC. C155		20 A	1	180 / 4767			3	50 A		RECEPT KILN C140A	20
21	POWERED DOOR OPERATOR		20 A	1		1000 / 4767						22
23	RECEPT - MECH. C149		20 A	1			180 / 0	1	20 A		SPARE	24
25	TEMPERATURE CONTROL PANEL - MECH. C149		20 A	1	0 / 0			1	20 A		SPARE	26
27	EF-3 (ON ROOF)		15 A	1		500 / 0		1	20 A		SPARE	28
29	EF-4 (ON ROOF)		15 A	1			696 / 0	1	20 A		SPARE	30
31	SPARE		20 A	1	0 / 0			1	20 A		SPARE	32
33	SPARE		20 A	1		0 / 0		1	20 A		SPARE	34
35	SPARE		20 A	1			0 / 0	1	20 A		SPARE	36
37	SPARE		20 A	1	0 / 0							38
39	SPARE		20 A	1		0 / 0		3	30 A		S.P.D.	40
41	SPARE		20 A	1			0 / 0					42
				TOTALS :	9467 VA	9527 VA	7623 VA					

TOTAL CONNECTED LOAD (VA) : 26616 VA **TOTAL CONNECTED LOAD (AMPS) :** 74 A

REMARKS:

NOTES:

1CHP1 PANELBOARD SCHEDULE

LOCATION : ELEC. C155 | **SCCR (AMPS RMS SYMM):** 35,000 | **SERVICE :** 480Y/277V 3Φ 4-Wire+Ground | **MAIN:** MLO
MOUNTING: SURFACE | **NEMA:** 1 | **AMP:** 200 A

CKT	DESCRIPTION	NOTE	AMP	POLE	A	B	C	POLE	AMP	NOTE	DESCRIPTION	CKT
1	SPARE		15 A	1	0 / 0							2
3	SPARE		15 A	1		0 / 0		3	15 A		SPARE	4
5	SPARE		15 A	1			0 / 0					6
7	WSHP-C153		15 A	1	2050 / 0			1	--		PROVISION	8
9	WSHP-C156		15 A	1		2050 / 0		1	--		PROVISION	10
11	WSHP-C143		15 A	1			2050 / 0	1	--		PROVISION	12
13	WSHP-C159		15 A	1	1884 / 0			1	--		PROVISION	14
15	WSHP-C165		15 A	1		3518 / 0		1	--		PROVISION	16
17							2715 / 0	1	--		PROVISION	18
19	WSHP-C168		15 A	3	2715 / 0			1	--		PROVISION	20
21						2715 / 0		1	--		PROVISION	22
23	WSHP-C146		15 A	1			3518 / 0	1	--		PROVISION	24
25	WSHP-C144		15 A	1	2050 / 0			1	--		PROVISION	26
27	PROVISION		--	1		0 / 0		1	--		PROVISION	28
29	PROVISION		--	1			0 / 0	1	--		PROVISION	30
31	PROVISION		--	1	0 / 0							32
33	PROVISION		--	1		0 / 0		3	15 A		SPARE	34
35	PROVISION		--	1			0 / 0					36
37	PROVISION		--	1	0 / 0							38
39	PROVISION		--	1		0 / 0		3	30 A		S.P.D.	40
41	PROVISION		--	1			0 / 0					42
				TOTALS :	8698 VA	8282 VA	8282 VA					

TOTAL CONNECTED LOAD (VA) : 25262 VA **TOTAL CONNECTED LOAD (AMPS) :** 30 A

REMARKS:

NOTES:

1CSL1 PANELBOARD SCHEDULE

LOCATION : ELEC. C155 | **SCCR (AMPS RMS SYMM):** 10,000 | **SERVICE :** 208Y/120V 3Φ 4-Wire+Ground | **MAIN:** MCB
MOUNTING: SURFACE | **NEMA:** 1 | **AMP:** 50 A

2

CKT	DESCRIPTION	NOTE	AMP	POLE	A	B	C	POLE	AMP	NOTE	DESCRIPTION	CKT
1	SPARE		20 A	1	0 / 0			1	20 A		SPARE	2
3	SPARE		20 A	1		0 / 0		1	20 A		SPARE	4
5	SPARE		20 A	1			0 / 0	1	20 A		SPARE	6
7	RECEPTS - IDF C164		20 A	1	180 / 0			1	20 A		SPARE	8
9	RECEPTS - IDF C164		20 A	1		180 / 0		1	20 A		SPARE	10
11	RECEPTS - IDF C164		20 A	1			360 / 0	1	20 A		SPARE	12
13	RECEPTS - IDF C164		20 A	1	360 / 0			1	--		PROVISION	14
15	RECEPTS - IDF C164		20 A	1		360 / 0		1	--		PROVISION	16
17	RECEPT - IDF C164		20 A	1			1200 / 0	1	--		PROVISION	18
19	RECEPT - IDF C164		20 A	1	960 / 0							20
21	PROVISION		--	1		0 / 0		3	30 A		S.P.D.	22
23	PROVISION		--	1			0 / 0					24
				TOTALS :	1500 VA	540 VA	1560 VA					

TOTAL CONNECTED LOAD (VA) : 3600 VA **TOTAL CONNECTED LOAD (AMPS) :** 10 A

REMARKS:

NOTES:

BCSC
TOGETHER WE LEARN

CSO
8831 Keystone Crossing, Indianapolis, IN 46240
317.848.7800 | csoinc.net
© 2018 CSO Architects, Inc. All Rights Reserved

Höweler+Yoon Architecture
617.517.4101 howeleryoon.com

D&A #24063
R.E. Dimond and Associates, Inc.
Consulting Engineers
732 North Capitol Avenue
Indianapolis, IN 46204
Phone: (317) 634-4672
Fax: (317) 638-8725

PROJECT:
BARTHOLOMEW CONSOLIDATED SCHOOL CORPORATION
MAPLE GROVE ELEMENTARY
TIPTON LAKES BLVD, COLUMBUS, IN 47201

SCOPE DRAWINGS:
These drawings indicate the general scope of the project in terms of architectural design concept, the dimensions of the building, the major architectural elements and the type of structural, mechanical and electrical systems.
The drawings do not necessarily indicate or describe all work required for full performance and completion of the requirements of the Contract.
On the basis of the general scope indicated or described, the trade contractors shall furnish all items required for the proper execution and completion of the work.

REVISIONS:

2	Addendum #2	06/17/2025

ISSUE DATE	DRAWN BY	CHECKED BY
05/30/2025	LPC	TEH

DRAWING TITLE:
SCHEDULES - PANELBOARDS - FIRST FLOOR UNIT C

CERTIFIED BY:
TIMOTHY E. HILL REGISTERED No. PE19800083 STATE OF INDIANA PROFESSIONAL ENGINEER
Timothy E. Hill
05/30/2025

DRAWING NUMBER
E611C

PROJECT NUMBER
2024022

MDP — PANELBOARD SCHEDULE

LOCATION : MECH./ ELEC. D179 | **SCCR (AMPS RMS SYMM):** 22,000 | **SERVICE :** 208Y/120V 3Φ 4-Wire+Ground | **MAIN:** MCB
MOUNTING: SURFACE | **NEMA:** 1 | **AMP:** 400 A

CKT	DESCRIPTION	NOTE	AMP	POLE	A	B	C	POLE	AMP	NOTE	DESCRIPTION	CKT
1					0 / 0			1	20 A		SPARE	2
3	SPARE		20 A	1		0 / 0		1	20 A		SPARE	4
5	SPARE		20 A	1			0 / 0	1	20 A		SPARE	6
7					3396 / 8818							8
9	PANELBOARD '1DL1'		200 A	3		3120 / 9886		3	200 A		PANELBOARD '1KL1'	10
11							3620 / 7716					12
13					3044 / 8407							14
15	PANELBOARD '1DL2'		200 A	3		3720 / 10783		3	200 A		PANELBOARD '1KL2'	16
17							2320 / 10108					18
19					0 / 0							20
21	SPARE		200 A	3		0 / 0		3	200 A		SPARE	22
23							0 / 0					24
25					0 / 0			1	20 A		SPARE	26
27	SPARE		200 A	3		0 / 0		1	20 A		SPARE	28
29							0 / 0	1	20 A		SPARE	30
31	PROVISION		--	1	0 / 0			1	--		PROVISION	32
33	PROVISION		--	1		0 / 0		1	--		PROVISION	34
35	PROVISION		--	1			0 / 0	1	--		PROVISION	36
37	PROVISION		--	1	0 / 0							38
39	PROVISION		--	1		0 / 0		3	30 A		S.P.D.	40
41	PROVISION		--	1			0 / 0					42
				TOTALS :	23665 VA	27509 VA	23764 VA					

TOTAL CONNECTED LOAD (VA) : 74938 VA | **TOTAL CONNECTED LOAD (AMPS) :** 208 A

REMARKS:

NOTES:

1DL1 — PANELBOARD SCHEDULE

LOCATION : MECH./ ELEC. D179 | **SCCR (AMPS RMS SYMM):** 22,000 | **SERVICE :** 208Y/120V 3Φ 4-Wire+Ground | **MAIN:** MLO
MOUNTING: SURFACE | **NEMA:** 1 | **AMP:** 200 A

CKT	DESCRIPTION	NOTE	AMP	POLE	A	B	C	POLE	AMP	NOTE	DESCRIPTION	CKT
1	SPARE		20 A	1	0 / 0			1	20 A		SPARE	2
3	SPARE		20 A	1		0 / 0		1	20 A		SPARE	4
5	SPARE		20 A	1			0 / 0	1	20 A		SPARE	6
7	SPARE		20 A	1	0 / 240			1	20 A		SITE POLE CAMERAS	8
9	SPARE		20 A	1		0 / 180		1	20 A		RECEPT - WATER RISER D182	10
11	SPARE		20 A	1			0 / 500	1	20 A		EMPLOYEE TIMECLOCK - RECEIVING D181	12
13	SPARE		20 A	1	0 / 0			1	20 A		SPARE	14
15	RECEPTS - RECEIVING D181		20 A	1		1260 / 0		1	20 A		SPARE	16
17	RECEPTS - CUSTODIAN OFFICE D183		20 A	1			1440 / 0	1	20 A		SPARE	18
19	RECEPTS - ROOMS D184, D185, V104		20 A	1	900 / 0			1	20 A		SPARE	20
21	WASHER - BUILDING STORAGE D184		20 A	1		180 / 0		1	20 A		SPARE	22
23	RECEPT - P.E. OFFICE D172B		20 A	1			1080 / 0	1	20 A		SPARE	24
25	RECEPT - OFFICE D176		20 A	1	1080 / 0			1	20 A		SPARE	26
27	RECEPT VEST. V101		20 A	1		720 / 0		1	20 A		SPARE	28
29	TEMP. CONTROL PANEL - BUILDING STORAGE...		20 A	1			0 / 0	1	20 A		SPARE	30
31	SPARE		20 A	1	0 / 1176			1	20 A		GMU-GL MECH./ ELEC. D179	32
33	SPARE		20 A	1		0 / 600		1	20 A		WH-B - MECH./ ELEC. D179	34
35	SPARE		20 A	1			0 / 600	1	20 A		WH-A - MECH./ ELEC. D179	36
37	SPARE		20 A	1	0 / 0							38
39	VALVE PIT SUMP PUMP		20 A	1		180 / 0		3	30 A		S.P.D.	40
41	SPARE		20 A	1			0 / 0					42
				TOTALS :	3396 VA	3120 VA	3620 VA					

TOTAL CONNECTED LOAD (VA) : 10136 VA | **TOTAL CONNECTED LOAD (AMPS) :** 28 A

REMARKS:

NOTES:

1DH1 — PANELBOARD SCHEDULE

LOCATION : MECH./ ELEC. D179 | **SCCR (AMPS RMS SYMM):** 35,000 | **SERVICE :** 480Y/277V 3Φ 4-Wire+Ground | **MAIN:** MLO
MOUNTING: SURFACE | **NEMA:** 1 | **AMP:** 200 A

CKT	DESCRIPTION	NOTE	AMP	POLE	A	B	C	POLE	AMP	NOTE	DESCRIPTION	CKT
1	SPARE		20 A	1	0 / 0			1	20 A		SPARE	2
3	SPARE		20 A	1		0 / 0		1	20 A		SPARE	4
5	SPARE		20 A	1			0 / 0	1	20 A		SPARE	6
7	LTG - MECH D179, CUST D177, RECEIVING D181		20 A	1	192 / 1000							8
9	LTG - STORAGE D184, MDF D186		20 A	1		1056 / 1000		3	15 A		ECUH - VEST V104	10
11	LTG - P.E. STOR D172A, RR D172C, RR D180		20 A	1			544 / 1000					12
13					3333 / 2000							14
15	EPUH - WATER RISER D182		20 A	3		3333 / 2000		3	15 A		ECUH - RECIEVING D181	16
17							3333 / 2000					18
19					1000 / 0							20
21	ECUH - VEST. V101		15 A	3		1000 / 0		3	15 A		SPARE	22
23							1000 / 0					24
25	LTG - CORR C101, STOR D171A, GIRLS/ BOYS...		20 A	1	2083 / 0							26
27	LTG - EXTERIOR		20 A	1		2401 / 0		3	15 A		SPARE	28
29	SITE LIGHTING - PLAYGROUND / BUS PARKING		20 A	1			733 / 0					30
31	SIGHT LIGHTING - BUS PARKING		20 A	1	900 / 0							32
33	SITE LIGHTING - NORTH CARPOOL TRACK		20 A	1		681 / 0		3	15 A		SPARE	34
35	SITE LIGHTING - SOUTH CARPOOL TRACK		20 A	1			1087 / 0					36
37	SITE LIGHTING - PARKING AREA / WALKWAY		20 A	1	1410 / 0							38
39	FLAG POLE LIGHTS		20 A	1		98 / 0		3	30 A		S.P.D.	40
41	LTG - DISCOVERY CENTER - UNIT D		20 A	1			486 / 0					42
				TOTALS :	11919 VA	11569 VA	10183 VA					

TOTAL CONNECTED LOAD (VA) : 33671 VA | **TOTAL CONNECTED LOAD (AMPS) :** 40 A

REMARKS:

NOTES:

DP-SB — PANELBOARD SCHEDULE

LOCATION : MECH./ ELEC. D179 | **SCCR (AMPS RMS SYMM):** 50,000 | **SERVICE :** 480Y/277V 3Φ 4-Wire+Ground | **MAIN:** MLO
MOUNTING: SURFACE | **NEMA:** 1 | **AMP:** 400 A

CKT	DESCRIPTION	NOTE	AMP	POLE	A	B	C	POLE	AMP	NOTE	DESCRIPTION	CKT
1	SPARE		20 A	1	0 / 0			1	20 A		SPARE	2
3	SPARE		20 A	1		0 / 0		1	20 A		SPARE	4
5	SPARE		20 A	1			0 / 0	1	20 A		SPARE	6
7					0 / 1080							8
9	SPARE		100 A	3		0 / 1080		3	30 A		TRANSFORMER 'T-2BS1' PANELBOARD '2BSL1'	10
11							0 / 3960					12
13					7474 / 3020							14
15	GLP-A1 - MECH 137		60 A	3		7474 / 1760		3	45 A		TRANSFORMER 'T-2AS1' PANELBOARD '2ASL1'	16
17							7474 / 3260					18
19					7474 / 14141							20
21	GLP-A2 - MECH 137		60 A	3		7474 / 13062		3	70 A		TRANSFORMER 'T-1DS1' PANELBOARD '1DSL1'	22
23							7474 / 10246					24
25					7474 / 30802							26
27	GLP-A3 - MECH 137		60 A	3		7474 / 30802		3	200 A		PANELBOARD '2ASH1'	28
29							7474 / 30802					30
31					0 / 1500							32
33	SPARE		45 A	3		0 / 540		3	30 A		TRANSFORMER 'T-1CS1' PANELBOARD '1CSL1'	34
35							0 / 1560					36
37					0 / 0							38
39	SPARE		70 A	3		0 / 0		3	30 A		S.P.D.	40
41							0 / 0					42
				TOTALS :	72964 VA	69666 VA	72249 VA					

TOTAL CONNECTED LOAD (VA) : 214879 VA | **TOTAL CONNECTED LOAD (AMPS) :** 258 A

REMARKS:

NOTES:

1DL2 — PANELBOARD SCHEDULE

LOCATION : MECH./ ELEC. D179 | **SCCR (AMPS RMS SYMM):** 22,000 | **SERVICE :** 208Y/120V 3Φ 4-Wire+Ground | **MAIN:** MLO
MOUNTING: SURFACE | **NEMA:** 1 | **AMP:** 200 A

CKT	DESCRIPTION	NOTE	AMP	POLE	A	B	C	POLE	AMP	NOTE	DESCRIPTION	CKT
1	SPARE		20 A	1	0 / 0			1	20 A		SPARE	2
3	SPARE		20 A	1		0 / 0		1	20 A		SPARE	4
5	SPARE		20 A	1			0 / 0	1	20 A		SPARE	6
7					60 / 500			1	20 A		EMPLOYEE TIMECLOCK - CORRIDOR C101	8
9	MOTORIZED BLEACHERS - GYMNASIUM D172		30 A	3		60 / 1000		1	20 A		POWERED DOOR OPERATOR	10
11							60 / 500	1	20 A		DISPLAY CASE - CORRIDOR C101	12
13	RECEPT GYMNASIUM D172		20 A	1	180 / 720			1	20 A		RECEPTS - CORRIDOR C101	14
15	RECEPT MECH./ ELEC. D179		20 A	1		540 / 1620		1	20 A		RECEPTS - MUSIC A119	16
17	RECEPTS - MECH D179		20 A	1			720 / 360	1	20 A		EWC - CAFETERIA D171	18
19	EF-5 (ON ROOF)		20 A	1	528 / 360			1	20 A		EWC - GYMNASIUM D172	20
21	DRYER - BUILDING STORAGE D184		30 A	2		500 / 0		1	20 A		SPARE	22
23							500 / 0	1	20 A		SPARE	24
25	EF-6 (ON ROOF) - CUSTODIAL D117		20 A	1	696 / 0			1	20 A		SPARE	26
27	SPARE		20 A	1		0 / 0		1	20 A		SPARE	28
29	SPARE		20 A	1			0 / 0	1	20 A		SPARE	30
31	SPARE		20 A	1	0 / 0			1	20 A		SPARE	32
33	SPARE		20 A	1		0 / 0		1	20 A		SPARE	34
35	SPARE		20 A	1			0 / 180	1	20 A		EXTERIOR WP RECEPT	36
37	SPARE		20 A	1	0 / 0							38
39	SPARE		20 A	1		0 / 0		3	30 A		S.P.D.	40
41	SPARE		20 A	1			0 / 0					42
				TOTALS :	3044 VA	3720 VA	2320 VA					

TOTAL CONNECTED LOAD (VA) : 9084 VA | **TOTAL CONNECTED LOAD (AMPS) :** 25 A

REMARKS:

NOTES:

1DHP1 — PANELBOARD SCHEDULE

LOCATION : MECH./ ELEC. D179 | **SCCR (AMPS RMS SYMM):** 35,000 | **SERVICE :** 480Y/277V 3Φ 4-Wire+Ground | **MAIN:** MLO
MOUNTING: SURFACE | **NEMA:** 1 | **AMP:** 200 A

CKT	DESCRIPTION	NOTE	AMP	POLE	A	B	C	POLE	AMP	NOTE	DESCRIPTION	CKT
1	SPARE		15 A	1	0 / 0							2
3	SPARE		15 A	1		0 / 0		3	15 A		SPARE	4
5	SPARE		15 A	1			0 / 0					6
7					0 / 3333							8
9	SPARE		60 A	3		0 / 3333		3	15 A		EPUH - MECH D179	10
11							0 / 3333					12
13					0 / 3333							14
15	SPARE		60 A	3		0 / 3333		3	15 A		EPUH - MECH D179	16
17							0 / 3333					18
19					0 / 3333							20
21	SPARE		60 A	3		0 / 3333		3	15 A		EPUH - MECH D179	22
23							0 / 3333					24
25					4072 / 204			2	15 A		T-GP1 (VALVE VAULT #1)	26
27	WSHP - D175		20 A	3		4072 / 0						28
29							4072 / 204	2	15 A		T-GP2 (VALVE VAULT #2)	30
31					2188 / 0							32
33	WSHP - D173		15 A	3		2188 / 0		2	15 A		SPARE	34
35							2188 / 0					36
37					305 / 0							38
39	CIRC PUMP (CP-A) - MECH./ ELEC. D179		15 A	3		305 / 0		3	30 A		S.P.D.	40
41							305 / 0					42
				TOTALS :	16769 VA	16565 VA	16769 VA					

TOTAL CONNECTED LOAD (VA) : 50103 VA | **TOTAL CONNECTED LOAD (AMPS) :** 60 A

REMARKS:

NOTES:

1DEL1 — PANELBOARD SCHEDULE

LOCATION : MECH./ ELEC. D179 | **SCCR (AMPS RMS SYMM):** 10,000 | **SERVICE :** 208Y/120V 3Φ 4-Wire+Ground | **MAIN:** MCB
MOUNTING: SURFACE | **NEMA:** 1 | **AMP:** 50 A

CKT	DESCRIPTION	NOTE	AMP	POLE	A	B	C	POLE	AMP	NOTE	DESCRIPTION	CKT
1	SPARE		20 A	1	0 / 0			1	20 A		SPARE	2
3	SPARE		20 A	1		0 / 0		1	20 A		SPARE	4
5	SPARE		20 A	1			0 / 0	1	20 A		SPARE	6
7	FIRE ALARM CONTROL PANEL - MECH./ ELEC....		20 A	1	1000 / 0			2	15 A		SPARE	8
9	BATTERY CHARGER - GENERATOR		20 A	1		1500 / 0						10
11	BLOCK HEATER - GENERATOR		20 A	1			1500 / 0	2	20 A		SPARE	12
13	SPARE		20 A	1	0 / 0							14
15	SPARE		20 A	1		0 / 0		2	30 A		SPARE	16
17	SPARE		20 A	1			0 / 0					18
19	SPARE		20 A	1	0 / 0							20
21	SPARE		20 A	1		0 / 0		3	30 A		S.P.D.	22
23	SPARE		20 A	1			0 / 0					24
				TOTALS :	1000 VA	1500 VA	1500 VA					

TOTAL CONNECTED LOAD (VA) : 4000 VA | **TOTAL CONNECTED LOAD (AMPS) :** 11 A

REMARKS:

NOTES:

1DEH1 — PANELBOARD SCHEDULE

LOCATION : MECH./ ELEC. D179 | **SCCR (AMPS RMS SYMM):** 35,000 | **SERVICE :** 480Y/277V 3Φ 4-Wire+Ground | **MAIN:** MLO
MOUNTING: SURFACE | **NEMA:** 1 | **AMP:** 100 A

CKT	DESCRIPTION	NOTE	AMP	POLE	A	B	C	POLE	AMP	NOTE	DESCRIPTION	CKT
1	SPARE		20 A	1	0 / 0			1	20 A		SPARE	2
3	SPARE		20 A	1		0 / 0		1	20 A		SPARE	4
5	SPARE		20 A	1			0 / 0	1	20 A		SPARE	6
7	EMERGENCY LTG - EXTERIOR		20 A	1	790 / 0			1	20 A		SPARE	8
9	EMERGENCY LTG - UNIT D		20 A	1		1768 / 0		1	20 A		SPARE	10
11	EM LTG - DISCOVERY CENTER - UNIT D		20 A	1			143 / 0	1	20 A		SPARE	12
13					0 / 0							14
15	SPARE		15 A	3		0 / 0		3	15 A		SPARE	16
17							0 / 0					18
19					0 / 0							20
21	SPARE		30 A	3		0 / 0		3	30 A		SPARE	22
23							0 / 0					24
25					0 / 0							26
27	SPARE		40 A	3		0 / 0		3	30 A		SPARE	28
29							0 / 0					30
31					2264 / 1000							32
33	PANELBOARDS '1BEH1'		50 A	3		680 / 1500		3	30 A		T-1DE1	34
35							796 / 1500					36
37					1063 / 0							38
39	PANELBOARDs '1AEH1'		50 A	3		846 / 0		3	30 A		S.P.D.	40
41							1140 / 0					42
				TOTALS :	5117 VA	4793 VA	3579 VA					

TOTAL CONNECTED LOAD (VA) : 13489 VA | **TOTAL CONNECTED LOAD (AMPS) :** 16 A

REMARKS:

NOTES:

1DHP2 — PANELBOARD SCHEDULE

LOCATION : BUILDING STORAGE D184 | **SCCR (AMPS RMS SYMM):** 35,000 | **SERVICE :** 480Y/277V 3Φ 4-Wire+Ground | **MAIN:** MLO
MOUNTING: SURFACE | **NEMA:** 1 | **AMP:** 200 A

CKT	DESCRIPTION	NOTE	AMP	POLE	A	B	C	POLE	AMP	NOTE	DESCRIPTION	CKT
1	SPARE		15 A	1	0 / 0							2
3	SPARE		15 A	1		0 / 0		3	15 A		SPARE	4
5	SPARE		15 A	1			0 / 0					6
7					2715 / 0			1	--		PROVISION	8
9	WSHP - D181		15 A	3		2715 / 0		1	--		PROVISION	10
11							2715 / 0	1	--		PROVISION	12
13	WSHP - D176		15 A	1	3518 / 0			1	--		PROVISION	14
15						2715 / 0		1	--		PROVISION	16
17	WSHP - D185		15 A	3			2715 / 0	1	--		PROVISION	18
19					2715 / 0			1	--		PROVISION	20
21	PROVISION		--	1		0 / 0		1	--		PROVISION	22
23	PROVISION		--	1			0 / 0	1	--		PROVISION	24
25	PROVISION		--	1	0 / 0			1	--		PROVISION	26
27	PROVISION		--	1		0 / 0		1	--		PROVISION	28
29	PROVISION		--	1			0 / 0	1	--		PROVISION	30
31	PROVISION		--	1	0 / 0			1	--		PROVISION	32
33	PROVISION		--	1		0 / 0		1	--		PROVISION	34
35	PROVISION		--	1			0 / 0	1	--		PROVISION	36
37	PROVISION		--	1	0 / 0							38
39	PROVISION		--	1		0 / 0		3	30 A		S.P.D.	40
41	PROVISION		--	1			0 / 0					42
				TOTALS :	8947 VA	5429 VA	5429 VA					

TOTAL CONNECTED LOAD (VA) : 19806 VA | **TOTAL CONNECTED LOAD (AMPS) :** 24 A

REMARKS:

NOTES:

1DSL2 — PANELBOARD SCHEDULE

LOCATION : MDF D186 | **SCCR (AMPS RMS SYMM):** 10,000 | **SERVICE :** 208Y/120V 3Φ 4-Wire+Ground | **MAIN:** MCB
MOUNTING: SURFACE | **NEMA:** 1 | **AMP:** 100 A

CKT	DESCRIPTION	NOTE	AMP	POLE	A	B	C	POLE	AMP	NOTE	DESCRIPTION	CKT
1	SPARE		20 A	1	0 / 0			1	20 A		SPARE	2
3	SPARE		20 A	1		0 / 0		1	20 A		SPARE	4
5	SPARE		20 A	1			0 / 0	1	20 A		SPARE	6
7	RECEPT - MDF D186		20 A	1	1000 / 90			2	15 A		DXFC-A - MDF D186	8
9	RECEPT - MDF D186		20 A	1		1000 / 90						10
11	RECEPT - MDF D186		20 A	1			1000 / 180	1	20 A		EXTERIOR RECEPT - HEAT PUMP (HP-A) - ROOF	12
13	RECEPTS - MDF D186		20 A	1	720 / 480			1	20 A		RECEPT - MDF D186	14
15	RECEPTS - MDF D186		20 A	1		1080 / 0		2	20 A		SPARE	16
17	HP-A (ON ROOF)		30 A	2			2038 / 0					18
19					2038 / 0							20
21	SPARE		15 A	2		0 / 0		3	30 A		S.P.D.	22
23							0 / 0					24
				TOTALS :	4328 VA	2170 VA	3218 VA					

2

TOTAL CONNECTED LOAD (VA) : 9717 VA | **TOTAL CONNECTED LOAD (AMPS) :** 27 A

REMARKS:

NOTES:

1DSL1 — PANELBOARD SCHEDULE

LOCATION : MECH./ ELEC. D179 | **SCCR (AMPS RMS SYMM):** 10.000 | **SERVICE :** 208Y/120V 3Φ 4-Wire+Ground | **MAIN:** MCB
MOUNTING: SURFACE | **NEMA:** 1 | **AMP:** 150 A

CKT	DESCRIPTION	NOTE	AMP	POLE	A	B	C	POLE	AMP	NOTE	DESCRIPTION	CKT
1	SPARE		20 A	1	0 / 0			1	20 A		SPARE	2
3	SPARE		20 A	1		0 / 0		1	20 A		SPARE	4
5	SPARE		20 A	1			0 / 0	1	20 A		SPARE	6
7	AV RACK - ICARE STORAGE D171A		20 A	1	500 / 1581			2	20 A	X	EVAPORATOR - FREEZER D175A	8
9	RECEPTS - CAFETERIA D171		20 A	1		1440 / 1581						10
11	RECEPTS - CAFETERIA D171		20 A	1			1260 / 1104					12
13	RECEPTS - GYMNASIUM D172		20 A	1	1080 / 1104			3	15 A		COOLER CONDENSING UNIT	14
15	RECEPTS - GYMNASIUM D172, P.E. STOR. D172A		20 A	1		720 / 1104						16
17	A/V RACK - P.E. STORAGE D172A		20 A	1			360 / 216	1	15 A	X	EVAPORATOR - COOLER D175A	18
19	WEST MOTORIZED GOAL - GYMNASIUM D172		20 A	1	1000 / 2208							20
21	EAST MOTORIZED GOAL - GYMNASIUM D172		20 A	1		1000 / 2208		3	40 A		FREEZER CONDENSING UNIT	22
23	WEST SCOREBOARD - GYMNASIUM D172		20 A	1			180 / 2208					24
25	EAST SCOREBOARD - GYMNASIUM D172		20 A	1	180 / 1920			1	20 A		FREEZER - LIGHTS, DRAIN LINE HEATERS	26
27	TEMPERATURE CONTROL PANEL - MECH D179		20 A	1		500 / 2100		1	20 A		COOLER - LIGHTS, DRAIN LINE HEATERS	28
29	TEMPERATURE CONTROL PANEL - MECH D179		20 A	1			500 / 720	1	20 A		SW BUS LOT, PLAYGROUND POLE CAMERAS	30
31	SPARE		20 A	1	0 / 240			1	20 A		NORTHEAST BUS LOT POLE-MOUNTED...	32
33	SPARE		20 A	1		0 / 240		1	20 A		CARPOOL LANES POLE-MOUNTED CAMERA	34
35	SPARE		20 A	1			0 / 480	1	20 A		FRONT PARKING LOT POLE MOUNTED CAMERA	36
37					4328 / 0							38
39	1DSL2		100 A	3		2170 / 0		3	30 A		S.P.D.	40
41							3218 / 0					42
				TOTALS :	14141 VA	13062 VA	10246 VA					

TOTAL CONNECTED LOAD (VA) : 37449 VA | **TOTAL CONNECTED LOAD (AMPS) :** 104 A

REMARKS:

NOTES:
X - PROVIDE PADLOCK HASP.

BCSC
TOGETHER WE LEARN

CSO
8831 Keystone Crossing, Indianapolis, IN 46240
317.848.7800 | csoinc.net
© 2018 CSO Architects, Inc. All Rights Reserved

Höweler+Yoon Architecture
617.517.4101 howeleryoon.com

D&A #24063
R.E. Dimond and Associates, Inc.
Consulting Engineers
732 North Capitol Avenue
Indianapolis, IN 46204
Phone: (317) 634-4672
Fax: (317) 638-8725

PROJECT:
BARTHOLOMEW CONSOLIDATED SCHOOL CORPORATION
MAPLE GROVE ELEMENTARY
TIPTON LAKES BLVD, COLUMBUS, IN 47201

SCOPE DRAWINGS:
These drawings indicate the general scope of the project in terms of architectural design concept, the dimensions of the building, the major architectural elements and the type of structural, mechanical and electrical systems.
The drawings do not necessarily indicate or describe all work required for full performance and completion of the requirements of the Contract.
On the basis of the general scope indicated or described, the trade contractors shall furnish all items required for the proper execution and completion of the work.

REVISIONS:

2	Addendum #2	06/17/2025

ISSUE DATE	DRAWN BY	CHECKED BY
05/30/2025	LPC	TEH

DRAWING TITLE:
SCHEDULES - PANELBOARDS - FIRST FLOOR UNIT D

CERTIFIED BY:
TIMOTHY E. HILL REGISTERED No. PE19800083 STATE OF INDIANA PROFESSIONAL ENGINEER
Timothy E. Hill
05/30/2025

DRAWING NUMBER
E611D

PROJECT NUMBER
2024022

2AH2 — PANELBOARD SCHEDULE

LOCATION : MECH. A219 | **SCCR (AMPS RMS SYMM):** 35,000 | **SERVICE :** 480Y/277V 3Φ 4-Wire+Ground | **MAIN:** MLO
MOUNTING: SURFACE | **NEMA:** 1 | **AMP:** 200 A

CKT	DESCRIPTION	NOTE	AMP	POLE	A	B	C	POLE	AMP	NOTE	DESCRIPTION	CKT
1	SPARE		20 A	1	0 / 0			1	20 A		SPARE	2
3	SPARE		20 A	1		0 / 0		1	20 A		SPARE	4
5	SPARE		20 A	1			0 / 0	1	20 A		SPARE	6
7	LIGHTING - CAFETERIA D171		20 A	1	924 / 0			1	20 A		SPARE	8
9	LIGHTING - GYMNASIUM D172		20 A	1		1575 / 0		1	20 A		SPARE	10
11	LIGHTING - GYMNASIUM D172		20 A	1			2450 / 0	1	20 A		SPARE	12
13	LTG - GYMNASIUM D172		20 A	1	384 / 0			1	20 A		SPARE	14
15	SPARE		20 A	1		0 / 0		1	20 A		SPARE	16
17	SPARE		20 A	1			0 / 0	1	20 A		SPARE	18
19	SPARE		20 A	1	0 / 0			1	20 A		SPARE	20
21	SPARE		20 A	1		0 / 0		1	20 A		SPARE	22
23	SPARE		20 A	1			0 / 0	1	20 A		SPARE	24
25	PROVISION		--	1	0 / 0			1	--		PROVISION	26
27	PROVISION		--	1		0 / 0		1	--		PROVISION	28
29	PROVISION		--	1			0 / 0	1	--		PROVISION	30
31	PROVISION		--	1	0 / 0			1	--		PROVISION	32
33	PROVISION		--	1		0 / 0		1	--		PROVISION	34
35	PROVISION		--	1			0 / 0	1	--		PROVISION	36
37					3400 / 0							38
39	T-2A5		45 A	3		2600 / 0		3	30 A		S.P.D.	40
41							2000 / 0					42
				TOTALS :	4708 VA	4175 VA	4450 VA					

TOTAL CONNECTED LOAD (VA) : 13333 VA | **TOTAL CONNECTED LOAD (AMPS) :** 16 A

REMARKS:

NOTES:

2AHP3 — PANELBOARD SCHEDULE

LOCATION : MECH. A219 | **SCCR (AMPS RMS SYMM):** 35,000 | **SERVICE :** 480Y/277V 3Φ 4-Wire+Ground | **MAIN:** MLO
MOUNTING: SURFACE | **NEMA:** 1 | **AMP:** 200 A

CKT	DESCRIPTION	NOTE	AMP	POLE	A	B	C	POLE	AMP	NOTE	DESCRIPTION	CKT
1	SPARE		15 A	1	0 / 0							2
3	SPARE		15 A	1		0 / 0		3	15 A		SPARE	4
5	SPARE		15 A	1			0 / 0					6
7					3601 / 0			1	--		PROVISION	8
9	WSHP-C101		15 A	3		3601 / 0		1	--		PROVISION	10
11							3601 / 0	1	--		PROVISION	12
13					3333 / 0			1	--		PROVISION	14
15	EPUH - MECH A218		15 A	3		3333 / 0		1	--		PROVISION	16
17							3333 / 0	1	--		PROVISION	18
19					3333 / 0			1	--		PROVISION	20
21	EPUH - MECH. A219		15 A	3		3333 / 0		1	--		PROVISION	22
23							3333 / 0	1	--		PROVISION	24
25	PROVISION		--	1	0 / 0			1	--		PROVISION	26
27	PROVISION		--	1		0 / 0		1	--		PROVISION	28
29	PROVISION		--	1			0 / 0	1	--		PROVISION	30
31	PROVISION		--	1	0 / 30359							32
33	PROVISION		--	1		0 / 30359		3	125 A		ERV-A - MECH. A219	34
35	PROVISION		--	1			0 / 30359					36
37	PROVISION		--	1	0 / 0							38
39	PROVISION		--	1		0 / 0		3	30 A		S.P.D.	40
41	PROVISION		--	1			0 / 0					42
				TOTALS :	40627 VA	40627 VA	40627 VA					

TOTAL CONNECTED LOAD (VA) : 121881 VA | **TOTAL CONNECTED LOAD (AMPS) :** 147 A

REMARKS:

NOTES:

2AL1 — PANELBOARD SCHEDULE

LOCATION : ELEC. A213 | **SCCR (AMPS RMS SYMM):** 10,000 | **SERVICE :** 208Y/120V 3Φ 4-Wire+Ground | **MAIN:** MCB
MOUNTING: SURFACE | **NEMA:** 1 | **AMP:** 200 A

CKT	DESCRIPTION	NOTE	AMP	POLE	A	B	C	POLE	AMP	NOTE	DESCRIPTION	CKT
1	SPARE		20 A	1	0 / 0			1	20 A		SPARE	2
3	SPARE		20 A	1		0 / 0		1	20 A		SPARE	4
5	SPARE		20 A	1			0 / 0	1	20 A		SPARE	6
7	RECEPTS - CLASSROOM A204		20 A	1	540 / 720			1	20 A		RECEPTS - ACTIVITY COMMONS A200A	8
9	RECEPTS - CLASSROOM A204		20 A	1		900 / 900		1	20 A		RECEPTS - ACTIVITY COMMONS A200A	10
11	RECEPTS - CLASSROOM A202		20 A	1			540 / 720	1	20 A		RECEPTS - ACTIVITY COMMONS A200B	12
13	RECEPTS - CLASSROOM A202		20 A	1	1080 / 1080			1	20 A		RECEPTS - ACTIVITY COMMONS A200B	14
15	RECEPTS - CLASSROOM A205		20 A	1		540 / 540		1	20 A		RECEPTS - CUBBIES A201B, SGR A201A	16
17	RECEPTS - CLASSROOM A205		20 A	1			900 / 360	1	20 A		RECEPTS - CUBBIES A206B, SGR A206A	18
19	RECEPTS - FLEX CLASSROOM A201		20 A	1	540 / 360			1	20 A		RECEPTS - CUBBIES A209B, SGR A209A	20
21	RECEPTS - FLEX CLASSROOM A201		20 A	1		900 / 1080		1	20 A		RECEPTS - FLEX CLASSROOM A220	22
23	RECEPT - CORRIDOR C202		20 A	1			360 / 1440	1	20 A		RECEPTS TECH. OFFICE A216	24
25	SPARE		20 A	1	0 / 360			1	20 A		RECEPT - TECH. STOR. A216A	26
27	RECEPTS - CLASSROOM A209		20 A	1		540 / 360		1	20 A		RECEPT - TECH. STOR. A216A	28
29	RECEPTS - CLASSROOM A209		20 A	1			900 / 360	1	20 A		RECEPT - TECH. STOR. A216A	30
31	RECEPTS CLASSROOM A206		20 A	1	540 / 360			1	20 A		RECEPT - TECH. STOR. A216A	32
33	RECEPTS CLASSROOM A206		20 A	1		900 / 360		1	20 A		RECEPT - TECH. STOR. A216A	34
35	RECEPTS - CLASSROOM A207		20 A	1			540 / 1080	1	20 A		RECEPTS - FLEX OFFICE A210	36
37	RECEPTS - CLASSROOM A207		20 A	1	900 / 0			1	20 A		SPARE	38
39	EWC/BF - ACTIVITY COMMONS A200A		20 A	1		680 / 0		1	20 A		SPARE	40
41	EWC/BF - ACTIVITY COMMONS A200B		20 A	1			680 / 0	1	20 A		SPARE	42
				TOTALS :	6480 VA	7700 VA	7880 VA					

TOTAL CONNECTED LOAD (VA) : 22060 VA | **TOTAL CONNECTED LOAD (AMPS) :** 61 A

REMARKS:
FEED-THROUGH LUGS.

NOTES:

2AL2 — PANELBOARD SCHEDULE

LOCATION : ELEC. A213 | **SCCR (AMPS RMS SYMM):** 10,000 | **SERVICE :** 208Y/120V 3Φ 4-Wire+Ground | **MAIN:** MLO
MOUNTING: SURFACE | **NEMA:** 1 | **AMP:** 200 A

2

CKT	DESCRIPTION	NOTE	AMP	POLE	A	B	C	POLE	AMP	NOTE	DESCRIPTION	CKT
1	SPARE		20 A	1	0 / 0			1	20 A		SPARE	2
3	SPARE		20 A	1		0 / 0		1	20 A		SPARE	4
5	SPARE		20 A	1			0 / 0	1	20 A		SPARE	6
7	TFC - ACTIVITY COMMONS A200A/B		25 A	1	2000 / 360			1	20 A		EXTERIOR WP RECEPT	8
9	TFC - ACTIVITY COMMONS A200A/B		25 A	1		2000 / 180		1	20 A		NAC PANEL - ELEC. A213	10
11	TFC - ACTIVITY COMMONS A200A/B		25 A	1			2000 / 180	1	20 A		RECEPT - MECH. A203	12
13	TFC - ACTIVITY COMMONS A200A/B		25 A	1	2000 / 500			1	20 A		TEMPERATURE CONTROL PANEL - MECH. A203	14
15	TFC - ACTIVITY COMMONS A200A/B		25 A	1		2000 / 180		1	20 A		RECEPT - MECH. A208	16
17	SPARE		20 A	1			0 / 500	1	20 A		TEMPERATURE CONTROL PANEL - MECH. A208	18
19	COPIER - STAFF DINING A218		20 A	1	500 / 0			1	20 A		SPARE	20
21	REFRIGERATOR - STAFF DINING A218		20 A	1		500 / 0		1	20 A		SPARE	22
23	VENDING MACHINE - STAFF DINING A218		20 A	1			500 / 0	1	20 A		SPARE	24
25	VENDING MACHINE - STAFF DINING A218		20 A	1	500 / 0			1	--		PROVISION	26
27	RECEPTS - STAFF DINING A218		20 A	1		540 / 0		1	--		PROVISION	28
29	UNDER COUNTER MICROWAVE -STAFF DINING...		20 A	1			1000 / 0	1	--		PROVISION	30
31	OVER COUNTER MICROWAVE -STAFF DINING...		20 A	1	1000 / 0			1	--		PROVISION	32
33	RECEPTS - STAFF DINING A218		20 A	1		180 / 0		1	--		PROVISION	34
35	SPARE		20 A	1			0 / 0	1	--		PROVISION	36
37	SPARE		20 A	1	0 / 0							38
39	SPARE		20 A	1		0 / 0		3	30 A		S.P.D.	40
41	SPARE		20 A	1			0 / 0					42
				TOTALS :	6860 VA	5580 VA	4180 VA					

TOTAL CONNECTED LOAD (VA) : 16620 VA | **TOTAL CONNECTED LOAD (AMPS) :** 46 A

REMARKS:

NOTES:

2AL5 — PANELBOARD SCHEDULE

LOCATION : MECH. A219 | **SCCR (AMPS RMS SYMM):** 10,000 | **SERVICE :** 208Y/120V 3Φ 4-Wire+Ground | **MAIN:** MCB
MOUNTING: SURFACE | **NEMA:** 1 | **AMP:** 100 A

CKT	DESCRIPTION	NOTE	AMP	POLE	A	B	C	POLE	AMP	NOTE	DESCRIPTION	CKT
1	SPARE		20 A	1	0 / 0			1	20 A		SPARE	2
3	SPARE		20 A	1		0 / 0		1	20 A		SPARE	4
5	SPARE		20 A	1			0 / 0	1	20 A		SPARE	6
7	WEST MOTORIZED ROLLER SHADES - GYM		20 A	1	800 / 400			1	20 A		EAST MOTORIZED ROLLER SHADES - CAFETERIA	8
9	WEST MOTORIZED ROLLER SHADES - GYM		20 A	1		800 / 600		1	20 A		MOTORIZED ROLLER SHADES - GYMNASIUM...	10
11	WEST MOTORIZED ROLLER SHADES - GYM		20 A	1			400 / 400	1	20 A		MOTORIZED ROLLER SHADES - VEST	12
13	EAST MOTORIZED ROLLER SHADES - GYM		20 A	1	800 / 600			1	20 A		MOTORIZED ROLLER SHADES - CAFETERIA D172	14
15	EAST MOTORIZED ROLLER SHADES - GYM		20 A	1		800 / 0		1	20 A		SPARE	16
17	EAST MOTORIZED ROLLER SHADES - GYM		20 A	1			400 / 0	1	20 A		SPARE	18
19	WEST MOTORIZED ROLLER SHADES -...		20 A	1	800 / 0							20
21	WEST MOTORIZED ROLLER SHADES -...		20 A	1		400 / 0		3	30 A		S.P.D.	22
23	EAST MOTORIZED ROLLER SHADES - CAFETERIA		20 A	1			800 / 0					24
				TOTALS :	3400 VA	2600 VA	2000 VA					

TOTAL CONNECTED LOAD (VA) : 8000 VA | **TOTAL CONNECTED LOAD (AMPS) :** 22 A

REMARKS:

NOTES:

2ASL1 — PANELBOARD SCHEDULE

LOCATION : ELEC. A213 | **SCCR (AMPS RMS SYMM):** 10,000 | **SERVICE :** 208Y/120V 3Φ 4-Wire+Ground | **MAIN:** MCB
MOUNTING: SURFACE | **NEMA:** 1 | **AMP:** 100 A

2

CKT	DESCRIPTION	NOTE	AMP	POLE	A	B	C	POLE	AMP	NOTE	DESCRIPTION	CKT
1	SPARE		20 A	1	0 / 0			1	20 A		SPARE	2
3	SPARE		20 A	1		0 / 0		1	20 A		SPARE	4
5	SPARE		20 A	1			0 / 0	1	20 A		SPARE	6
7	RECEPT - IDF A112		20 A	1	180 / 180			1	20 A		RECEPT - IDF A212	8
9	RECEPT - IDF A112		20 A	1		180 / 180		1	20 A		RECEPT - IDF A212	10
11	RECEPT - IDF A112		20 A	1			540 / 540	1	20 A		RECEPT - IDF A212	12
13	RECEPT - IDF A112		20 A	1	360 / 360			1	20 A		RECEPT - IDF A212	14
15	RECEPT - IDF A112		20 A	1		360 / 360		1	20 A		RECEPT - IDF A212	16
17	RECEPT - IDF A112		20 A	1			1440 / 240	1	20 A		RECEPT - IDF A212	18
19	RECEPT - IDF A112		20 A	1	1200 / 240			1	20 A		RECEPT - IDF A212	20
21	TEMPERATURE CONTROL PANEL - MECH. A219		20 A	1		500 / 0		1	20 A		SPARE	22
23	TEMPERATURE CONTROL PANEL - MECH. A219		20 A	1			500 / 0	1	20 A		SPARE	24
25	TEMPERATURE CONTROL PANEL - MECH. A219		20 A	1	500 / 0							26
27	RECEPT- ELEC. A213		20 A	1		180 / 0		3	30 A		S.P.D.	28
29	SPARE		20 A	1			0 / 0					30
				TOTALS :	3020 VA	1760 VA	3260 VA					

TOTAL CONNECTED LOAD (VA) : 8040 VA | **TOTAL CONNECTED LOAD (AMPS) :** 22 A

REMARKS:

NOTES:

2AH1 — PANELBOARD SCHEDULE

LOCATION : ELEC. A213 | **SCCR (AMPS RMS SYMM):** 35,000 | **SERVICE :** 480Y/277V 3Φ 4-Wire+Ground | **MAIN:** MLO
MOUNTING: SURFACE | **NEMA:** 1 | **AMP:** 200 A

CKT	DESCRIPTION	NOTE	AMP	POLE	A	B	C	POLE	AMP	NOTE	DESCRIPTION	CKT
1	SPARE		20 A	1	0 / 0			1	20 A		SPARE	2
3	SPARE		20 A	1		0 / 0		1	20 A		SPARE	4
5	SPARE		20 A	1			0 / 0	1	20 A		SPARE	6
7	LTG - CLASSROOM A204, A205		20 A	1	1479 / 0			1	--		PROVISION	8
9	LTG - CLASS A201, A202, IDF A212, MECH A219		20 A	1		3118 / 0		1	--		PROVISION	10
11	LTG - ACTIVITY COMMONS A200A/B, CORR C202		20 A	1			1353 / 0	1	--		PROVISION	12
13	LTG - CLASSROOM A209		20 A	1	1088 / 0			1	--		PROVISION	14
15	LTG - CLASSROOM A206, A207		20 A	1		1536 / 0		1	--		PROVISION	16
17	LTG - DISCOVERY CENTER - UNIT A2		20 A	1			344 / 0	1	--		PROVISION	18
19	PROVISION		--	1	0 / 0			1	--		PROVISION	20
21	PROVISION		--	1		0 / 0		1	--		PROVISION	22
23	PROVISION		--	1			0 / 0	1	--		PROVISION	24
25	PROVISION		--	1	0 / 0			1	--		PROVISION	26
27	PROVISION		--	1		0 / 0		1	--		PROVISION	28
29	PROVISION		--	1			0 / 0	1	--		PROVISION	30
31	PROVISION		--	1	0 / 0			1	--		PROVISION	32
33	PROVISION		--	1		0 / 0		1	--		PROVISION	34
35	PROVISION		--	1			0 / 0	1	--		PROVISION	36
37					13340 / 0							38
39	TRANSFORMER 'T-2A1'		125 A	3		13280 / 0		3	30 A		S.P.D.	40
41							12060 / 0					42
				TOTALS :	15907 VA	17934 VA	13757 VA					

TOTAL CONNECTED LOAD (VA) : 47598 VA | **TOTAL CONNECTED LOAD (AMPS) :** 57 A

REMARKS:

NOTES:

2AHP1 — PANELBOARD SCHEDULE

LOCATION : MECH. A208 | **SCCR (AMPS RMS SYMM):** 35,000 | **SERVICE :** 480Y/277V 3Φ 4-Wire+Ground | **MAIN:** MLO
MOUNTING: SURFACE | **NEMA:** 1 | **AMP:** 200 A

CKT	DESCRIPTION	NOTE	AMP	POLE	A	B	C	POLE	AMP	NOTE	DESCRIPTION	CKT
1	SPARE		15 A	1	0 / 0							2
3	SPARE		15 A	1		0 / 0		3	15 A		SPARE	4
5	SPARE		15 A	1			0 / 0					6
7					2715 / 1884			1	15 A		WSHP-A210	8
9	WSHP-A207		15 A	3		2715 / 144		1	20 A		LTG - MECH. A208	10
11							2715 / 0	1	--		PROVISION	12
13					2715 / 0			1	--		PROVISION	14
15	WSHP-A206		15 A	3		2715 / 0		1	--		PROVISION	16
17							2715 / 0	1	--		PROVISION	18
19					2715 / 0			1	--		PROVISION	20
21	WSHP-A200B		15 A	3		2715 / 0		1	--		PROVISION	22
23							2715 / 0	1	--		PROVISION	24
25					2715 / 0			1	--		PROVISION	26
27	WSHP-A216		15 A	3		2715 / 0		1	--		PROVISION	28
29							2715 / 0	1	--		PROVISION	30
31					2715 / 0			1	--		PROVISION	32
33	WSHP-A209		15 A	3		2715 / 0		1	--		PROVISION	34
35							2715 / 0	1	--		PROVISION	36
37					0 / 0							38
39	SPARE		15 A	3		0 / 0		3	30 A		S.P.D.	40
41							0 / 0					42
				TOTALS :	15457 VA	13717 VA	13573 VA					

TOTAL CONNECTED LOAD (VA) : 42747 VA | **TOTAL CONNECTED LOAD (AMPS) :** 51 A

REMARKS:

NOTES:

2AHP2 — PANELBOARD SCHEDULE

LOCATION : MECH. A203 | **SCCR (AMPS RMS SYMM):** 35,000 | **SERVICE :** 480Y/277V 3Φ 4-Wire+Ground | **MAIN:** MLO
MOUNTING: SURFACE | **NEMA:** 1 | **AMP:** 200 A

CKT	DESCRIPTION	NOTE	AMP	POLE	A	B	C	POLE	AMP	NOTE	DESCRIPTION	CKT
1	SPARE		15 A	1	0 / 0							2
3	SPARE		15 A	1		0 / 0		3	15 A		SPARE	4
5	SPARE		15 A	1			0 / 0					6
7					2715 / 3518			1	15 A		WSHP - MECH. A203	8
9	WSHP-A204		15 A	3		2715 / 144		1	20 A		LTG - MECH. A203	10
11							2715 / 0	1	--		PROVISION	12
13					2715 / 0			1	--		PROVISION	14
15	WSHP-A205		15 A	3		2715 / 0		1	--		PROVISION	16
17							2715 / 0	1	--		PROVISION	18
19					2715 / 0			1	--		PROVISION	20
21	WSHP-A202		15 A	3		2715 / 0		1	--		PROVISION	22
23							2715 / 0	1	--		PROVISION	24
25					2715 / 0			1	--		PROVISION	26
27	WSHP-A201		15 A	3		2715 / 0		1	--		PROVISION	28
29							2715 / 0	1	--		PROVISION	30
31					2715 / 0			1	--		PROVISION	32
33	WSHP-A200A		15 A	3		2715 / 0		1	--		PROVISION	34
35							2715 / 0	1	--		PROVISION	36
37					0 / 0							38
39	SPARE		15 A	3		0 / 0		3	30 A		S.P.D.	40
41							0 / 0					42
				TOTALS :	17091 VA	13717 VA	13573 VA					

TOTAL CONNECTED LOAD (VA) : 44381 VA | **TOTAL CONNECTED LOAD (AMPS) :** 53 A

REMARKS:

NOTES:

2ASH1 — PANELBOARD SCHEDULE

LOCATION : MECH. A219 | **SCCR (AMPS RMS SYMM):** 35,000 | **SERVICE :** 480Y/277V 3Φ 4-Wire+Ground | **MAIN:** MLO
MOUNTING: SURFACE | **NEMA:** 1 | **AMP:** 200 A

CKT	DESCRIPTION	NOTE	AMP	POLE	A	B	C	POLE	AMP	NOTE	DESCRIPTION	CKT
1	SPARE		20 A	1	0 / 0			1	20 A		SPARE	2
3	SPARE		20 A	1		0 / 0		1	20 A		SPARE	4
5	SPARE		20 A	1			0 / 0	1	20 A		SPARE	6
7					12188 / 9307							8
9	WSHP-D172		55 A	3		12188 / 9307		3	45 A		WSHP-D171	10
11							12188 / 9307					12
13					9307 / 0							14
15	WSHP-120		45 A	3		9307 / 0		3	15 A		SPARE	16
17							9307 / 0					18
19					0 / 0							20
21	SPARE		60 A	3		0 / 0		3	15 A		SPARE	22
23							0 / 0					24
25					0 / 0							26
27	SPARE		60 A	3		0 / 0		3	15 A		SPARE	28
29							0 / 0					30
31					0 / 0							32
33	SPARE		60 A	3		0 / 0		3	15 A		SPARE	34
35							0 / 0					36
37					0 / 0							38
39	SPARE		70 A	3		0 / 0		3	30 A		S.P.D.	40
41							0 / 0					42
				TOTALS :	30802 VA	30802 VA	30802 VA					

TOTAL CONNECTED LOAD (VA) : 92407 VA | **TOTAL CONNECTED LOAD (AMPS) :** 111 A

REMARKS:

NOTES:

BCSC TOGETHER WE LEARN

CSO
8831 Keystone Crossing, Indianapolis, IN 46240
317.848.7800 | csoinc.net

© 2018 CSO Architects, Inc. All Rights Reserved

Höweler+Yoon Architecture
617.517.4101 howeleryoon.com

D&A #24063
R.E. Dimond and Associates, Inc.
Consulting Engineers
732 North Capitol Avenue
Indianapolis, IN 46204
Phone: (317) 634-4672
Fax: (317) 638-8725

PROJECT:
BARTHOLOMEW CONSOLIDATED SCHOOL CORPORATION
MAPLE GROVE ELEMENTARY
TIPTON LAKES BLVD, COLUMBUS, IN 47201

SCOPE DRAWINGS:
These drawings indicate the general scope of the project in terms of architectural design concept, the dimensions of the building, the major architectural elements and the type of structural, mechanical and electrical systems.
The drawings do not necessarily indicate or describe all work required for full performance and completion of the requirements of the Contract.
On the basis of the general scope indicated or described, the trade contractors shall furnish all items required for the proper execution and completion of the work.

REVISIONS:

2	Addendum #2	06/17/2025

ISSUE DATE	DRAWN BY	CHECKED BY
05/30/2025	LPC	TEH

DRAWING TITLE:
SCHEDULES - PANELBOARDS - SECOND FLOOR - UNIT A

CERTIFIED BY:
TIMOTHY E. HILL REGISTERED No. PE19800083 STATE OF INDIANA PROFESSIONAL ENGINEER
Timothy E. Hill
05/30/2025

DRAWING NUMBER
E612A

PROJECT NUMBER
2024022

2BHP4 — PANELBOARD SCHEDULE

LOCATION : MECHANICAL ROOM C225	**SCCR (AMPS RMS SYMM):**	**SERVICE :** 480Y/277V 3Φ 4-Wire+Ground	**MAIN:** MLO
MOUNTING: SURFACE		**NEMA:** 1	**AMP:** 200 A

CKT	DESCRIPTION	NOTE	AMP	POLE	A	B	C	POLE	AMP	NOTE	DESCRIPTION	CKT
1	SPARE		15 A	1	0 / 0							2
3	SPARE		15 A	1		0 / 0		3	15 A		SPARE	4
5	SPARE		15 A	1			0 / 0					6
7					3601 / 0							8
9	WSHP-C140		15 A	3		3601 / 0		3	15 A		SPARE	10
11							3601 / 0					12
13	WSHP-C145		15 A	1	1884 / 0			1	--		PROVISION	14
15	WSHP-C151		15 A	1		3518 / 0		1	--		PROVISION	16
17	WSHP-C152		15 A	1			1884 / 0	1	--		PROVISION	18
19	PROVISION		--	1	0 / 0			1	--		PROVISION	20
21	PROVISION		--	1		0 / 0		1	--		PROVISION	22
23	PROVISION		--	1			0 / 0	1	--		PROVISION	24
25	PROVISION		--	1	0 / 0			1	--		PROVISION	26
27	PROVISION		--	1		0 / 0		1	--		PROVISION	28
29	PROVISION		--	1			0 / 0	1	--		PROVISION	30
31	PROVISION		--	1	0 / 0			1	--		PROVISION	32
33	PROVISION		--	1		0 / 0		1	--		PROVISION	34
35	PROVISION		--	1			0 / 0	1	--		PROVISION	36
37	PROVISION		--	1	0 / 0							38
39	PROVISION		--	1		0 / 0		3	30 A		S.P.D.	40
41	PROVISION		--	1			0 / 0					42
				TOTALS :	5485 VA	7119 VA	5485 VA					

TOTAL CONNECTED LOAD (VA) : 18088 VA **TOTAL CONNECTED LOAD (AMPS) :** 22 A

REMARKS:

NOTES:

2BL1 — PANELBOARD SCHEDULE

LOCATION : ELEC. B226	**SCCR (AMPS RMS SYMM):** 10,000	**SERVICE :** 208Y/120V 3Φ 4-Wire+Ground	**MAIN:** MCB
MOUNTING: SURFACE		**NEMA:** 1	**AMP:** 200 A

CKT	DESCRIPTION	NOTE	AMP	POLE	A	B	C	POLE	AMP	NOTE	DESCRIPTION	CKT
1	SPARE		20 A	1	0 / 0			1	20 A		SPARE	2
3	SPARE		20 A	1		0 / 0		1	20 A		SPARE	4
5	SPARE		20 A	1			0 / 0	1	20 A		SPARE	6
7	RECEPTS - CLASSROOM (6TH) B236		20 A	1	540 / 720			1	20 A		RECEPTS - ACTIVITY COMMONS B200B	8
9	RECEPTS - CLASSROOM (6TH) B236		20 A	1		900 / 1080		1	20 A		RECEPTS - ACTIVITY COMMONS B200B	10
11	RECEPTS - CLASSROOM (6TH) B238		20 A	1			540 / 720	1	20 A		RECEPTS - ACTIVITY COMMONS B200A	12
13	RECEPTS - CLASSROOM (6TH) B238		20 A	1	1080 / 540			1	20 A		RECEPTS - ACTIVITY COMMONS B200A	14
15	RECEPTS - CLASSROOM (6TH) B235		20 A	1		360 / 680		1	20 A		EWC - ACTIVITY COMMONS B200B	16
17	RECEPTS - CLASSROOM (6TH) B235		20 A	1			900 / 680	1	20 A		EWC - ACTIVITY COMMONS B200A	18
19	RECEPTS - FLEX CLASSROOM B230		20 A	1	360 / 360			1	20 A		RECEPTS - CUBBIES B238B, SGR B238A	20
21	RECEPTS - FLEX CLASSROOM B230		20 A	1		1080 / 360		1	20 A		RECEPTS - CUBBIES B235B, SGR B235A	22
23	RECEPTS - CLASSROOM (5TH) B231		20 A	1			540 / 360	1	20 A		RECEPTS - CUBBIES B233B, SGR B233A	24
25	RECEPTS - CLASSROOM (5TH) B231		20 A	1	1080 / 540			1	20 A		RECEPTS - CUBBIES B230B, SGR B230A	26
27	RECEPTS - CLASSROOM (5TH) B234		20 A	1		540 / 720		1	20 A		RECEPTS - FLEX OFFICE B239	28
29	RECEPTS - CLASSROOM (5TH) B234		20 A	1			900 / 540	1	20 A		RECEPTS - MOTHERS ROOM B221	30
31	RECEPTS - CLASSROOM (5TH) B233		20 A	1	540 / 500			1	20 A		UNDER COUNTER REFRIG. - MOTHERS ROOM...	32
33	RECEPTS - CLASSROOM (5TH) B233		20 A	1		900 / 180		1	20 A		RECEPT - ELEVATOR SERVICE B224	34
35	RECEPTS - FLEX SMALL CLASSROOM B220		20 A	1			720 / 0	1	20 A		SPARE	36
37	RECEPTS - FLEX SMALL CLASSROOM B220		20 A	1	860 / 0			1	20 A		SPARE	38
39	SPARE		20 A	1		0 / 0		1	20 A		SPARE	40
41	SPARE		20 A	1			0 / 0	1	20 A		SPARE	42
				TOTALS :	7120 VA	6800 VA	5900 VA					

TOTAL CONNECTED LOAD (VA) : 19820 VA **TOTAL CONNECTED LOAD (AMPS) :** 55 A

REMARKS:
FEED-THROUGH LUGS.

NOTES:

2BH1 — PANELBOARD SCHEDULE

LOCATION : ELEC. B226	**SCCR (AMPS RMS SYMM):** 35,000	**SERVICE :** 480Y/277V 3Φ 4-Wire+Ground	**MAIN:** MLO
MOUNTING: SURFACE		**NEMA:** 1	**AMP:** 200 A

CKT	DESCRIPTION	NOTE	AMP	POLE	A	B	C	POLE	AMP	NOTE	DESCRIPTION	CKT
1	SPARE		20 A	1	0 / 0			1	20 A		SPARE	2
3	SPARE		20 A	1		0 / 0		1	20 A		SPARE	4
5	SPARE		20 A	1			0 / 0	1	20 A		SPARE	6
7	LIGHTING - B235, B236		20 A	1	1440 / 0			1	--		PROVISION	8
9	LIGHTING - B238		20 A	1		1384 / 0		1	--		PROVISION	10
11	LIGHTING - B200A, B200B		20 A	1			1410 / 0	1	--		PROVISION	12
13	LIGHTING - B233, B234		20 A	1	1440 / 0			1	--		PROVISION	14
15	LIGHTING - B220, B230, B231		20 A	1		2772 / 0		1	--		PROVISION	16
17	LTG - DISCOVERY CENTER - UNIT B2		20 A	1			1543 / 0	1	--		PROVISION	18
19	PROVISION		--	1	0 / 0			1	--		PROVISION	20
21	PROVISION		--	1		0 / 0		1	--		PROVISION	22
23	PROVISION		--	1			0 / 0	1	--		PROVISION	24
25	PROVISION		--	1	0 / 0			1	--		PROVISION	26
27	PROVISION		--	1		0 / 0		1	--		PROVISION	28
29	PROVISION		--	1			0 / 0	1	--		PROVISION	30
31	PROVISION		--	1	0 / 0			1	--		PROVISION	32
33	PROVISION		--	1		0 / 0		1	--		PROVISION	34
35	PROVISION		--	1			0 / 0	1	--		PROVISION	36
37					12700 / 0							38
39	TRANSFORMER 'T-2B1'		125 A	3		12880 / 0		3	30 A		S.P.D.	40
41							9980 / 0					42
				TOTALS :	15580 VA	17036 VA	12933 VA					

TOTAL CONNECTED LOAD (VA) : 45549 VA **TOTAL CONNECTED LOAD (AMPS) :** 55 A

REMARKS:

NOTES:

2BL2 — PANELBOARD SCHEDULE

LOCATION : ELEC. B226	**SCCR (AMPS RMS SYMM):** 10,000	**SERVICE :** 208Y/120V 3Φ 4-Wire+Ground	**MAIN:** MLO
MOUNTING: SURFACE		**NEMA:** 1	**AMP:** 200 A

CKT	DESCRIPTION	NOTE	AMP	POLE	A	B	C	POLE	AMP	NOTE	DESCRIPTION	CKT
1	SPARE		20 A	1	0 / 0			1	20 A		SPARE	2
3	SPARE		20 A	1		0 / 0		1	20 A		SPARE	4
5	SPARE		20 A	1			0 / 0	1	20 A		SPARE	6
7	TFC - ACTIVITY COMMONS B200A/B		25 A	1	2000 / 360			1	20 A		EXTERIOR WP RECEPTS	8
9	TFC - ACTIVITY COMMONS B200A/B		25 A	1		2000 / 0		1	20 A		SPARE	10
11	TFC - ACTIVITY COMMONS B200A/B		25 A	1			2000 / 180	1	20 A		NAC PANEL - ELEC. B226	12
13	TFC - ACTIVITY COMMONS B200A/B		25 A	1	2000 / 720			1	20 A		RECEPT - ELEC. B226	14
15	TFC - ACTIVITY COMMONS B200A/B		25 A	1		2000 / 500		1	20 A		TEMPERATURE CONTROL PANEL - MECH B222	16
17	RECEPTS - OT/PT OFFICE B223A		20 A	1			720 / 500	1	20 A		TEMPERATURE CONTROL PANEL - MECH B222	18
19	SPARE		20 A	1	0 / 500			1	20 A		TEMPERATURE CONTROL PANEL - MECH B237	20
21	RECEPTS - OT/PT THERAPY B223		20 A	1		1080 / 500		1	20 A		TEMPERATURE CONTROL PANEL - MECH. B232	22
23	SPARE		20 A	1			0 / 180	1	20 A		RECEPT - MECH. B237	24
25	SPARE		20 A	1	0 / 0			1	20 A		SPARE	26
27	SPARE		20 A	1		0 / 0		1	20 A		SPARE	28
29	SPARE		20 A	1			0 / 0	1	20 A		SPARE	30
31	SPARE		20 A	1	0 / 0			1	20 A		SPARE	32
33	SPARE		20 A	1		0 / 0		1	20 A		SPARE	34
35	SPARE		20 A	1			0 / 500	1	20 A		ELEVATOR CAB LIGHTS	36
37	SPARE		20 A	1	0 / 0							38
39	SPARE		20 A	1		0 / 0		3	30 A		S.P.D.	40
41	SPARE		20 A	1			0 / 0					42
				TOTALS :	5580 VA	6080 VA	4080 VA					

2

TOTAL CONNECTED LOAD (VA) : 15740 VA **TOTAL CONNECTED LOAD (AMPS) :** 44 A

REMARKS:

NOTES:

2BHP1 — PANELBOARD SCHEDULE

LOCATION : MECH. B237	**SCCR (AMPS RMS SYMM):** 35,000	**SERVICE :** 480Y/277V 3Φ 4-Wire+Ground	**MAIN:** MLO
MOUNTING: SURFACE		**NEMA:** 1	**AMP:** 200 A

CKT	DESCRIPTION	NOTE	AMP	POLE	A	B	C	POLE	AMP	NOTE	DESCRIPTION	CKT
1	SPARE		15 A	1	0 / 0							2
3	SPARE		15 A	1		0 / 0		3	15 A		SPARE	4
5	SPARE		15 A	1			0 / 0					6
7					2715 / 144			1	20 A		LTG - MECH. B237	8
9	WSHP-B236		15 A	3		2715 / 0		1	--		PROVISION	10
11							2715 / 0	1	--		PROVISION	12
13					2715 / 0			1	--		PROVISION	14
15	WSHP-B235		15 A	3		2715 / 0		1	--		PROVISION	16
17							2715 / 0	1	--		PROVISION	18
19					2715 / 0			1	--		PROVISION	20
21	WSHP-B200B		15 A	3		2715 / 0		1	--		PROVISION	22
23							2715 / 0	1	--		PROVISION	24
25	WSHP-B239		15 A	1	1884 / 0			1	--		PROVISION	26
27	WSHP-B223		15 A	1		3518 / 0		1	--		PROVISION	28
29							2715 / 0	1	--		PROVISION	30
31	WSHP-B238		15 A	3	2715 / 0			1	--		PROVISION	32
33						2715 / 0		1	--		PROVISION	34
35	PROVISION		--	1			0 / 0	1	--		PROVISION	36
37	PROVISION		--	1	0 / 0							38
39	PROVISION		--	1		0 / 0		3	30 A		S.P.D.	40
41	PROVISION		--	1			0 / 0					42
				TOTALS :	12886 VA	14376 VA	10858 VA					

TOTAL CONNECTED LOAD (VA) : 38121 VA **TOTAL CONNECTED LOAD (AMPS) :** 46 A

REMARKS:

NOTES:

2BSL1 — PANELBOARD SCHEDULE

LOCATION : ELEC. B226	**SCCR (AMPS RMS SYMM):** 10,000	**SERVICE :** 208Y/120V 3Φ 4-Wire+Ground	**MAIN:** MCB
MOUNTING: SURFACE		**NEMA:** 1	**AMP:** 50 A

CKT	DESCRIPTION	NOTE	AMP	POLE	A	B	C	POLE	AMP	NOTE	DESCRIPTION	CKT
1	SPARE		20 A	1	0 / 0			1	20 A		SPARE	2
3	SPARE		20 A	1		0 / 0		1	20 A		SPARE	4
5	SPARE		20 A	1			0 / 0	1	20 A		SPARE	6
7	RECEPT - IDF B129		20 A	1	180 / 180			1	20 A		RECEPT - IDF B229	8
9	RECEPT - IDF B129		20 A	1		180 / 180		1	20 A		RECEPT - IDF B229	10
11	RECEPT - IDF B129		20 A	1			540 / 540	1	20 A		RECEPT - IDF B229	12
13	RECEPT - IDF B129		20 A	1	360 / 360			1	20 A		RECEPT - IDF B229	14
15	RECEPT - IDF B129		20 A	1		360 / 360		1	20 A		RECEPT - IDF B229	16
17	RECEPT - IDF B129		20 A	1			1440 / 1440	1	20 A		RECEPT - IDF B229	18
19	PROVISION		--	1	0 / 0							20
21	PROVISION		--	1		0 / 0		3	30 A		SPARE	22
23	PROVISION		--	1			0 / 0					24
				TOTALS :	1080 VA	1080 VA	3960 VA					

2

TOTAL CONNECTED LOAD (VA) : 6120 VA **TOTAL CONNECTED LOAD (AMPS) :** 17 A

REMARKS:

NOTES:

2BHP2 — PANELBOARD SCHEDULE

LOCATION : MECH. B232	**SCCR (AMPS RMS SYMM):** 35,000	**SERVICE :** 480Y/277V 3Φ 4-Wire+Ground	**MAIN:** MLO
MOUNTING: SURFACE		**NEMA:** 1	**AMP:** 200 A

CKT	DESCRIPTION	NOTE	AMP	POLE	A	B	C	POLE	AMP	NOTE	DESCRIPTION	CKT
1	SPARE		15 A	1	0 / 0							2
3	SPARE		15 A	1		0 / 0		3	15 A		SPARE	4
5	SPARE		15 A	1			0 / 0					6
7					2715 / 144			1	20 A		LTG - MECH. B232	8
9	WSHP-B231		15 A	3		2715 / 0		1	--		PROVISION	10
11							2715 / 0	1	--		PROVISION	12
13					2715 / 0			1	--		PROVISION	14
15	WSHP-B230		15 A	3		2715 / 0		1	--		PROVISION	16
17							2715 / 0	1	--		PROVISION	18
19					2715 / 0			1	--		PROVISION	20
21	WSHP-B200A		15 A	3		2715 / 0		1	--		PROVISION	22
23							2715 / 0	1	--		PROVISION	24
25					2715 / 0			1	--		PROVISION	26
27	WSHP-B234		15 A	3		2715 / 0		1	--		PROVISION	28
29							2715 / 0	1	--		PROVISION	30
31					2715 / 0			1	--		PROVISION	32
33	WSHP-B233		15 A	3		2715 / 0		1	--		PROVISION	34
35							2715 / 0	1	--		PROVISION	36
37					0 / 0							38
39	SPARE		15 A	3		0 / 0		3	30 A		S.P.D.	40
41							0 / 0					42
				TOTALS :	13717 VA	13573 VA	13573 VA					

TOTAL CONNECTED LOAD (VA) : 40863 VA **TOTAL CONNECTED LOAD (AMPS) :** 49 A

REMARKS:

NOTES:

2BHP3 — PANELBOARD SCHEDULE

LOCATION : MECH...	**SCCR (AMPS RMS SYMM):** 35,000	**SERVICE :** 480Y/277V 3Φ 4-Wire+Ground	**MAIN:** MLO
MOUNTING: SURFACE		**NEMA:** 1	**AMP:** 200 A

CKT	DESCRIPTION	NOTE	AMP	POLE	A	B	C	POLE	AMP	NOTE	DESCRIPTION	CKT
1	SPARE		15 A	1	0 / 0							2
3	SPARE		15 A	1		0 / 0		3	15 A		SPARE	4
5	SPARE		15 A	1			0 / 0					6
7					3333 / 0							8
9	EPUH - MECH FAN ROOM B222		15 A	3		3333 / 0		3	15 A		SPARE	10
11							3333 / 0					12
13					2188 / 0							14
15	WSHP-B123		15 A	3		2188 / 0		3	15 A		SPARE	16
17							2188 / 0					18
19	WSHP-B220		15 A	1	1884 / 0							20
21	PROVISION		--	1		0 / 0		3	15 A		SPARE	22
23	PROVISION		--	1			0 / 0					24
25	PROVISION		--	1	0 / 0			1	--		PROVISION	26
27	PROVISION		--	1		0 / 0		1	--		PROVISION	28
29	PROVISION		--	1			0 / 0	1	--		PROVISION	30
31	PROVISION		--	1	0 / 0			1	--		PROVISION	32
33	PROVISION		--	1		0 / 0		1	--		PROVISION	34
35	PROVISION		--	1			0 / 0	1	--		PROVISION	36
37					0 / 30359							38
39	S.P.D.		30 A	3		0 / 30359		3	125 A		ERV-B - MECH FAN ROOM B222	40
41							0 / 30359					42
				TOTALS :	37764 VA	35881 VA	35881 VA					

TOTAL CONNECTED LOAD (VA) : 109526 VA **TOTAL CONNECTED LOAD (AMPS) :** 132 A

REMARKS:

NOTES:

BCSC TOGETHER WE LEARN

CSO
8831 Keystone Crossing, Indianapolis, IN 46240
317.848.7800 | csoinc.net

© 2018 CSO Architects, Inc. All Rights Reserved

Höweler+Yoon Architecture
617.517.4101 howeleryoon.com

D&A #24063

R.E. Dimond and Associates, Inc.
Consulting Engineers
732 North Capitol Avenue
Indianapolis, IN 46204
Phone: (317) 634-4672
Fax: (317) 638-8725

PROJECT:
BARTHOLOMEW CONSOLIDATED SCHOOL CORPORATION
MAPLE GROVE ELEMENTARY
TIPTON LAKES BLVD, COLUMBUS, IN 47201

SCOPE DRAWINGS:
These drawings indicate the general scope of the project in terms of architectural design concept, the dimensions of the building, the major architectural elements and the type of structural, mechanical and electrical systems.
The drawings do not necessarily indicate or describe all work required for full performance and completion of the requirements of the Contract.
On the basis of the general scope indicated or described, the trade contractors shall furnish all items required for the proper execution and completion of the work.

REVISIONS:

2	Addendum #2	06/17/2025

ISSUE DATE	DRAWN BY	CHECKED BY
05/30/2025	LPC	TEH

DRAWING TITLE:
SCHEDULES - PANELBOARDS - SECOND FLOOR - UNIT B

CERTIFIED BY:
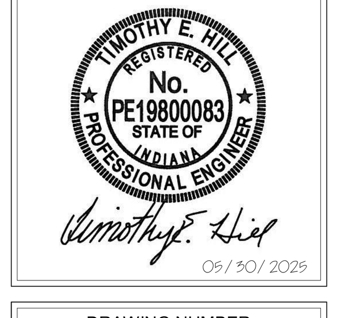

DRAWING NUMBER
E612B

PROJECT NUMBER
2024022

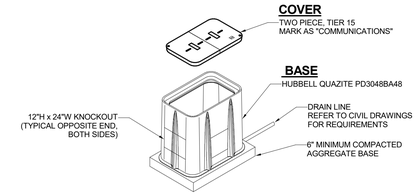

2 TYPICAL HANDHOLE DETAIL
N.T.S.

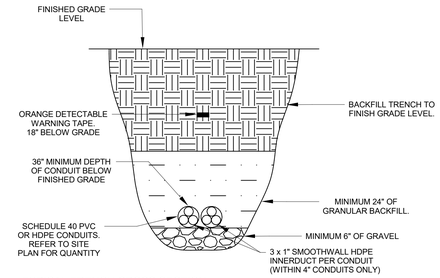

3 TYPICAL TRENCH CROSS SECTION
N.T.S.

GENERAL SITE PLAN NOTES

A CONTRACTOR SHALL FURNISH AND INSTALL ALL CABLING AND PATHWAYS TO ENSURE A COMPLETE AND FUNCTIONAL SYSTEM FOR BACKBONE FIBER OPTIC AND COPPER CABLING.

B ALL BACKBONE OSP FIBER OPTIC AND COPPER CABLING SHALL BE FURNISHED AND INSTALLED ACCORDING TO THE DIVISION 27 SPECIFICATIONS.

C ALL OSP CONDUIT AND PATHWAYS SHALL BE PROVIDED AND INSTALLED ACCORDING TO THE DIVISION 27 SPECIFICATIONS.

D ALL EXISTING OSP CONDUITS AND CABLING SHALL REMAIN UNLESS OTHERWISE NOTED.

E CONDUITS AND DUCTBANKS TO BE DEMOLISHED SHALL NOT BE DISTURBED UNTIL ALL EXISTING CABLING AND CIRCUITS ARE RELOCATED TO NEW CONDUITS AND DUCTBANKS.

F EXISTING CONDUIT AND DUCTBANKS TO BE DEMOLISHED SHALL BE SEALED, CAPPED, AND MADE WATER TIGHT AS TO PREVENT WATER ENTERING BACK INTO THE BUILDING.

G ALL CONDUIT BENDS SHALL HAVE A MINIMUM BEND RADIUS OF 10 TIMES THE INTERNAL DIAMETER OF THE CONDUIT. THE MINIMUM BEND RADIUS FOR ALL 4" CONDUITS SHALL BE 48".

H CONTRACTOR SHALL MAINTAIN A MINIMUM 24" SEPARATION FROM THE TELECOM DUCTBANK AND PATHWAY FROM EMI SOURCES. CONTRACTOR SHALL MAINTAIN A MINIMUM OF 36" SEPARATION FROM ALL OTHER UTILITIES.

I REFER TO CIVIL DRAWINGS FOR ALL FINAL ROUTES AND REQUIREMENTS.

SHEET NOTES

1 MDF D182A LOCATION. ALL UNDERGROUND ENTRANCE CONDUITS STUBBED WITHIN ROOM SHALL BE ROUTED WITH A NEGATIVE SLOPE AWAY FROM THE BUILDING TO A DEDICATED TELECOMMUNICATIONS HANDHOLE ON THE PROPERTY.

2 (4) - 4" UNDERGROUND GRC CONDUITS FROM BUILDING TO HANDHOLE. REFER TO CIVIL DOCUMENTATION FOR CONTINUATION OF ROUTE.

3 APPROXIMATE ROUTING OF 2" SCH-40 OR HDPE CONDUIT.

4 HANDHOLE SIZED 30"X48"X48" AT A MINIMUM.

5 CONDUIT PATHWAY TO CONNECT TO TELECOMMUNICATIONS SERVICE ON SITE. REFERENCE CIVIL DOCUMENTATION FOR FINAL ROUTING.

6 APPROXIMATE ROUTING OF 1.25" SCH-40 OR HDPE CONDUIT.

7 APPROXIMATE LOCATION OF NEW 24"X24"X36" HANDHOLE.

8 CONTRACTOR SHALL PROVIDE 6 STRAND FIBER AT THIS POLE TO SUPPORT WIRELESS ACCESS POINT AND SECURITY CAMERA. REFER TO DETAIL 1/T404.

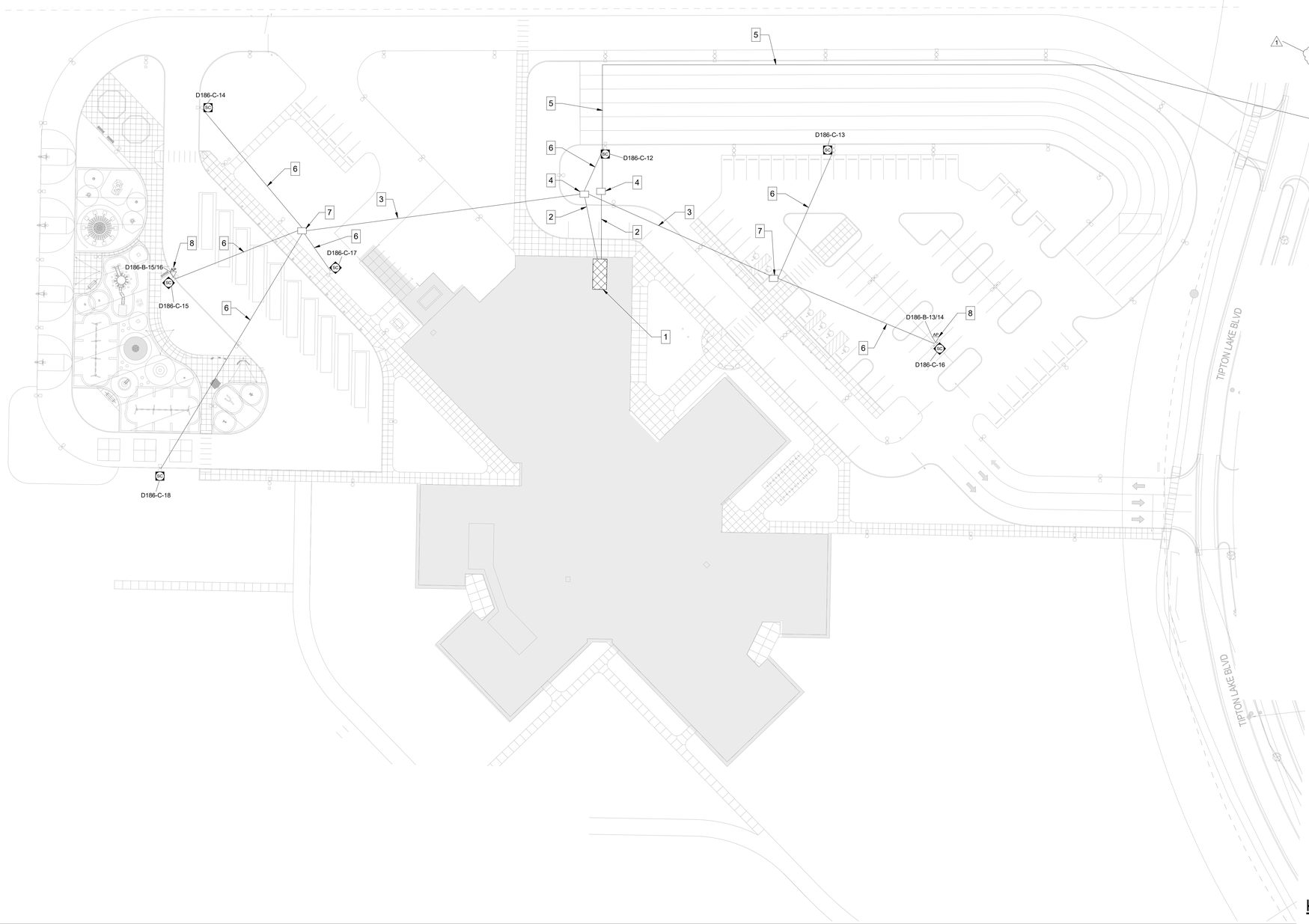

1 TECHNOLOGY SITE PLAN
1/32" = 1'-0"

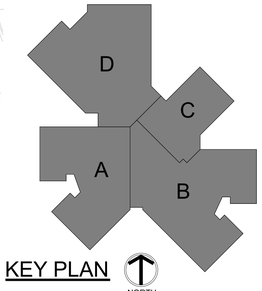

KEY PLAN

NORTH

BCSC TOGETHER WE LEARN

CSO
8831 Keystone Crossing, Indianapolis, IN 46240
317.848.7800 | csoinc.net

© 2018 CSO Architects, Inc. All Rights Reserved

Höweler+Yoon Architecture
617.517.4101 howeleryoon.com

DESIGN 27 TECHNOLOGY +ACOUSTICS
1650 EAST 49TH STREET
INDIANAPOLIS, IN 46205
317.536.8000
WWW.DESIGN27.COM

PROJECT:
BARTHOLOMEW CONSOLIDATED SCHOOL CORPORATION
MAPLE GROVE ELEMENTARY
TIPTON LAKES BLVD, COLUMBUS, IN 47201

SCOPE DRAWINGS:
These drawings indicate the general scope of the project in terms of architectural design concept, the dimensions of the building, the major architectural elements and the type of construction and mechanical and electrical systems.
The drawings do not necessarily indicate or describe all work required for full performance and completion of the requirements of the Contract.
On the basis of the general scope indicated or described, the bidders and contractors will furnish all items required for the proper execution and completion of the work.

REVISIONS:

1	ADDENDUM #2	06/17/25

ISSUE DATE	DRAWN BY	CHECKED BY
05/30/2025	MKD	JKK

DRAWING TITLE:
TECHNOLOGY SITE PLAN

CERTIFIED BY:
REGISTERED COMMUNICATIONS DISTRIBUTION DESIGNER
Bicsi
Jared Klingler
BICSI ID # 407182
EXPIRES 12-31-27
RCDD

DRAWING NUMBER
T001

PROJECT NUMBER
2024022

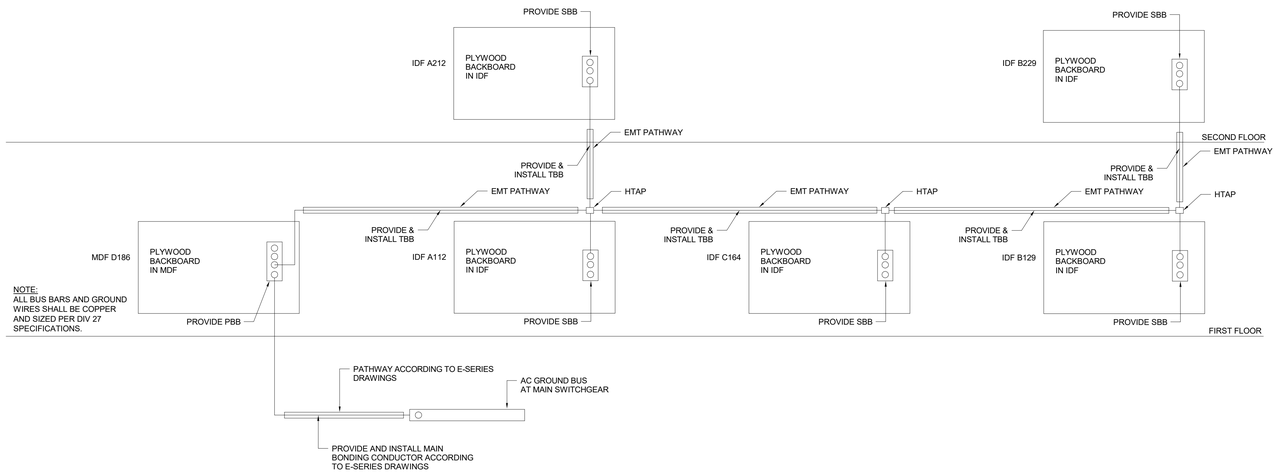

1 TELECOM GROUND RISER DETAIL
N.T.S.

CONDUCTOR SIZING

Recommended Sizing of the Telecommunications Bonding Backbone Conductor (TBBC) and Grounding Equalizer (GE) per J-STD-607-B

The TBBC, BC, and BCT shall be copper conductors. The TBBC shall be sized at 2 kcmil per linear foot of conductor length up to a maximum size of a 750 kcmil. The TBBC may be insulated. The Bonding conductor for Telecommunications (BCT) and Bonding Conductor (BC) shall be, as a minimum, the same size as the largest TBBC used (1).

TBBC LENGTH LINEAR M (FT)	TBBC SIZE (AWG)
LESS THAN 4(13')	6
4-6 (14-20')	4
6-8 (21-26')	3
8-10 (27-33')	2
10-13 (34-41')	1
13-16 (43-52')	1/0
16-20 (53-66')	2/0
20-26 (67-84')	3/0
26-32 (85-105')	4/0
32-38 (106-125')	250 kcmil
38-46 (126-150')	300 kcmil
46-53 (151-175')	350 kcmil
53-76 (176-250')	500 kcmil
76-91 (251-300')	600 kcmil
Greater than 91 (301')	750 kcmil

The TEBC minimum conductor size shall be a No. 6 AWG.

(1). Telecommunications Industry Association, Commercial Building Grounding (Earthing) and Bonding Requirements For Telecommunications, J-STD-607-B, September 2011.

GROUNDING SYSTEM NOTES (THIS DETAIL)

A. TBBC, TEBC, AND BC GROUNDING CONDUCTORS MUST BE INSTALLED IN COMPLIANCE WITH LOCAL CODES; THIS MAY REQUIRE INSTALLATION IN METALLIC CONDUIT IF RUN THROUGH PLENUM CEILING CAVITIES

B. GROUNDING CONDUCTORS RUN THROUGH A CONDUIT SHALL BE BONDED TO THE CONDUIT AT EACH END.

C. ALL GROUND CONDUCTORS SHALL BE INSTALLED IN THE SHORTEST AND MOST DIRECT PATH PRACTICAL.

D. WHERE THE ENTRANCE FACILITY IS LOCATED IN THE ER, THE PBB SHALL ALSO SERVE AS THE ABB FOR THE ROOM; THE TBBCS REQUIRED FROM THE ER TO EACH TR ALONG THE BACKBONE CABLE PATH WILL ALSO BE USED TO CONNECT THE SBBs TO THE PBB.

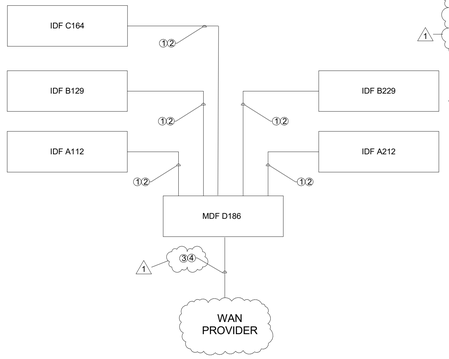

2 TELECOM RISER CABLING DIAGRAM
N.T.S.

RISER LEGEND: (THIS DETAIL)

1. NEW 12 STRAND SINGLE MODE FIBER OPTIC CABLE.
2. NEW 25 PAIR ANALOG COPPER CABLE.
3. FIBER OPTIC ENTRANCE CABLING BY OTHERS
4. COPPER ENTRANCE CABLING BY OTHERS

RISER NOTES (THIS DETAIL)

1. UNLESS OTHERWISE NOTED, RISER TERMINATIONS SHALL BE AS FOLLOWS:

A) SINGLE MODE FIBER OPTIC CABLE WILL BE TERMINATED WITH LC CONNECTORS IN PATCH PANELS WITHIN FIBER ENCLOSURE IN THE RACKS AT EACH END.
B) UTP COPPER (VOICE) BACKBONE CABLES SHALL TERMINATE ON 110 STYLE BLOCKS ON BACKBOARDS AT EACH END.

2. RISER CABLES ENTERING MDF AND TELECOMMUNICATIONS ROOM(S) SHALL CONTINUE WITHIN EACH ROOM TO THEIR SPECIFIED TERMINATION POINT WITH ADEQUATE SERVICE LOOP (MINIMUM 10' COILED IN THE LADDER TRAY AT EACH END).

3. FIBER LABELING AT A MINIMUM SHALL CLARIFY THE TYPE OF FIBER OPTIC CABLE, THE STRAND QUANTITY, AND THE LOCATION (ROOM #, RACK #, AND ENCLOSURE LABEL).

4. COPPER LABELING AT A MINIMUM SHALL CLARIFY THE STRAND/PAIR NUMBER AND THE LOCATION OF PUNCHDOWN (ROOM # AND PUNCH TERMINATION).

5. CONTRACTOR SHALL CONFIRM RISER CABLE LABELING WITH OWNER PRIOR TO INSTALLATION. LABELING SHALL BE CLEARLY PRINTED ON FIBER ENCLOSURE AND CABLING.

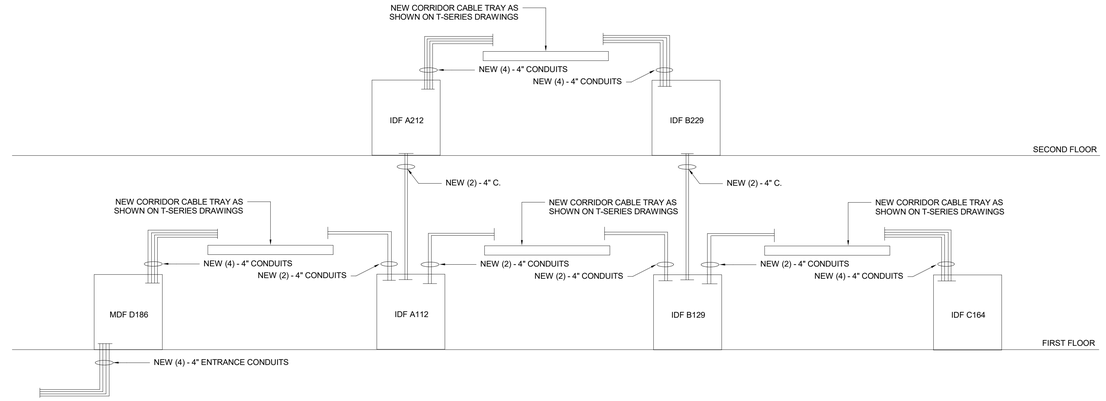

3 TELECOM RISER DISTRIBUTION DIAGRAM
N.T.S.

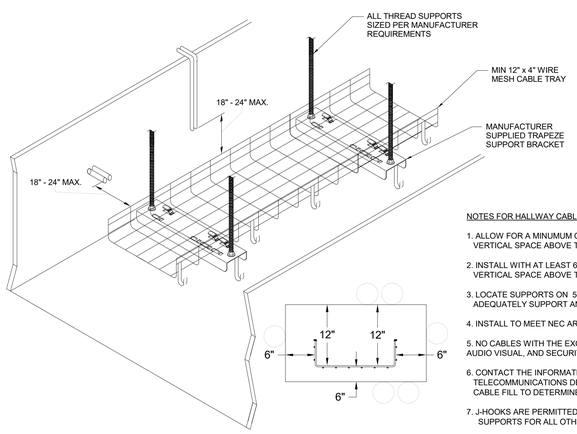

NOTES FOR HALLWAY CABLE TRAY DISTRIBUTION

1. ALLOW FOR A MINUMUM OF 12 INCHES OF CLEAR VERTICAL SPACE ABOVE THE CABLE TRAY
2. INSTALL WITH AT LEAST 6 INCHES OF CLEAR VERTICAL SPACE ABOVE THE CEILING TILES
3. LOCATE SUPPORTS ON 5 FT MAXIMUM CENTERS TO ADEQUATELY SUPPORT AND DISTRIBUTE CABLE WEIGHT
4. INSTALL TO MEET NEC ARTICLE 318
5. NO CABLES WITH THE EXCEPTION OF TELECOMMUNICATIONS, AUDIO VISUAL, AND SECURITY MAY BE PLACED ON THE CABLE TRAY
6. CONTACT THE INFORMATION TECHNOLOGY TELECOMMUNICATIONS DESIGNER WITH CABLE TRAY CABLE FILL TO DETERMINE LOAD CAPACITY OF THE SYSTEM
7. J-HOOKS ARE PERMITTED TO BE ATTACHED TO CABLE TRAY SUPPORTS FOR ALL OTHER APPROVED LOW VOLTAGE CABLING.

4 CORRIDOR BASKET CABLE TRAY
N.T.S.

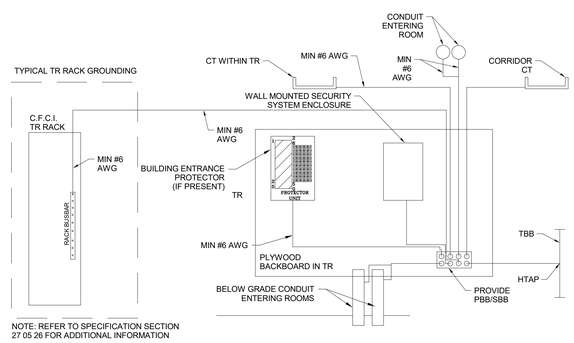

NOTE: REFER TO SPECIFICATION SECTION 27 05 26 FOR ADDITIONAL INFORMATION

5 TELECOM TYPICAL GROUND DETAIL
N.T.S.

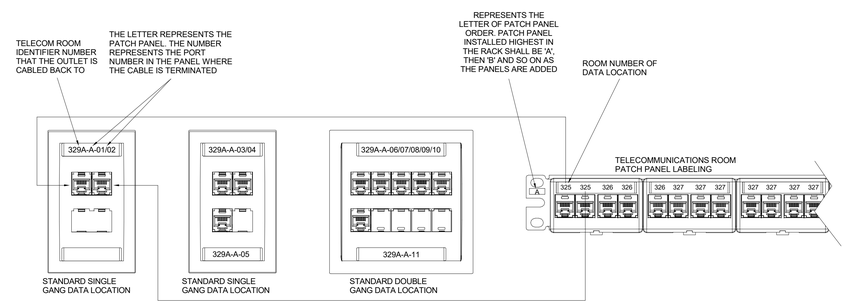

6 TYPICAL DEVICE LABELING DETAIL
N.T.S.

BCSC TOGETHER WE LEARN

CSO
8831 Keystone Crossing, Indianapolis, IN 46240
317.848.7800 | csoinc.net

© 2018 CSO Architects, Inc. All Rights Reserved

Höweler+Yoon Architecture
617.517.4101 howeleryoon.com

DESIGN 27 TECHNOLOGY + ACOUSTICS
1650 EAST 49TH STREET
INDIANAPOLIS, IN 46205
317.536.8000
WWW.DESIGN27.COM

PROJECT:
BARTHOLOMEW CONSOLIDATED SCHOOL CORPORATION
MAPLE GROVE ELEMENTARY
TIPTON LAKES BLVD, COLUMBUS, IN 47201

SCOPE DRAWINGS:
These drawings indicate the general scope of the project in terms of architectural design concept, the dimensions of the building, the layout of mechanical and electrical the type of structural, mechanical and electrical systems.
The drawings do not necessarily indicate or describe all work required for the complete performance and completion of the requirements of the Contract.
On the basis of the general scope indicated or described, the trade contractors shall furnish all items required for the proper execution and completion of the work.

REVISIONS:

1	ADDENDUM #2	06/17/25

ISSUE DATE	DRAWN BY	CHECKED BY
05/30/2025	MKD	JKK

DRAWING TITLE:
TELECOM DIAGRAMS

CERTIFIED BY:
REGISTERED COMMUNICATIONS DISTRIBUTION DESIGNER
Bicsi
Jared Klingler
BICSI ID # 407182
EXPIRES 12-31-27
RCDD

DRAWING NUMBER
T300

PROJECT NUMBER
2024022

SECURITY CAMERA LEGEND	
SC	SINGLE SENSOR CAMERA
SC SC	DUAL SENSOR CAMERA
SC SC SC	THREE SENSOR CAMERA
SC SC SC SC	FOUR SENSOR CAMERA
SC	HEMISPHERIC LENS CAMERA

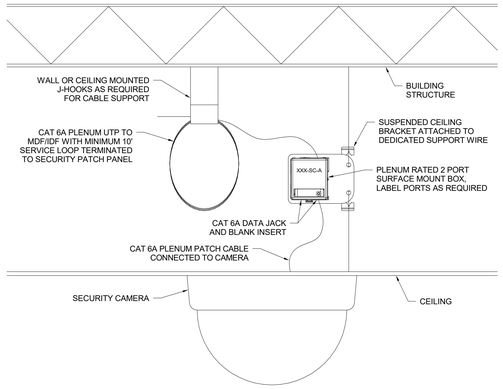

1 SECURITY CAMERA LOCATION - CEILING MOUNT
N.T.S. SC

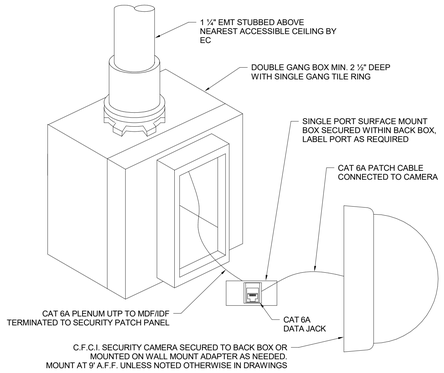

2 SECURITY CAMERA - INTERIOR WALL MOUNT
N.T.S. SC

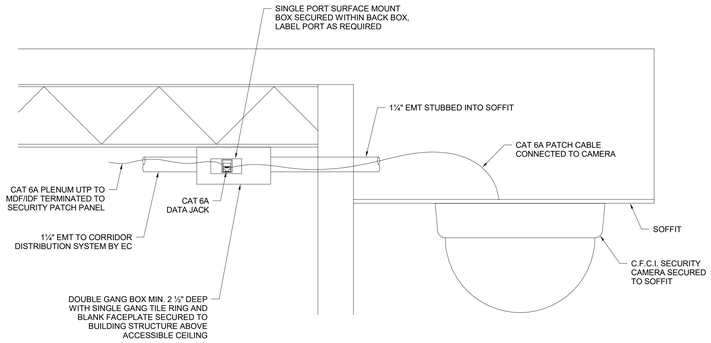

3 SECURITY CAMERA -SOFFITT MOUNTED
N.T.S. SC

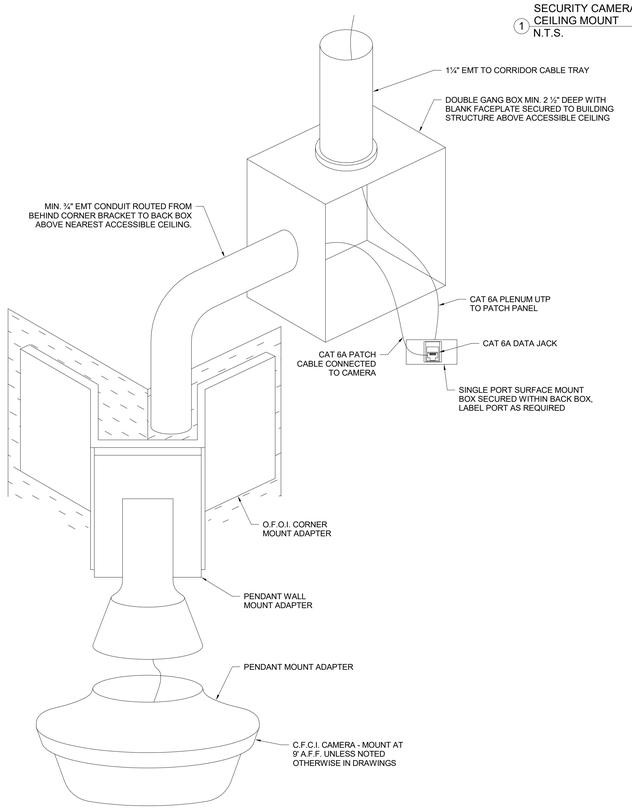

4 SECURITY CAMERA - INTERIOR CORNER MOUNT
N.T.S. SC

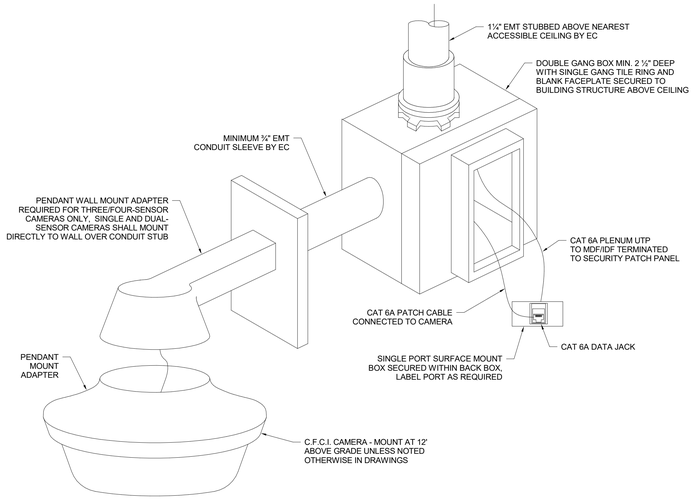

5 SECURITY CAMERA - INTERIOR WALL MOUNT
N.T.S. SC

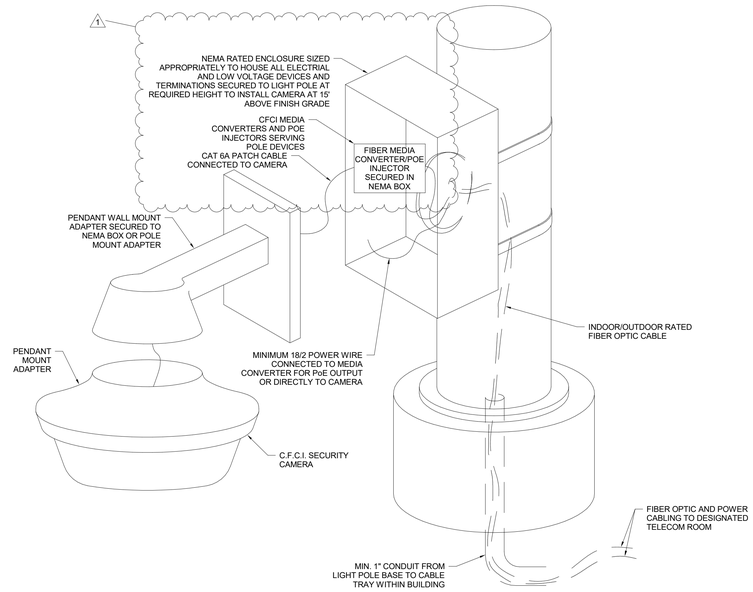

6 SECURITY CAMERA - POLE MOUNT
N.T.S. SC

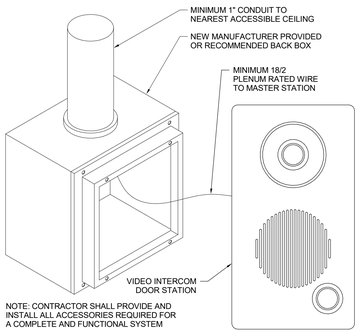

8 VIDEO INTERCOM - DOOR STATION LOCATION
N.T.S. VI

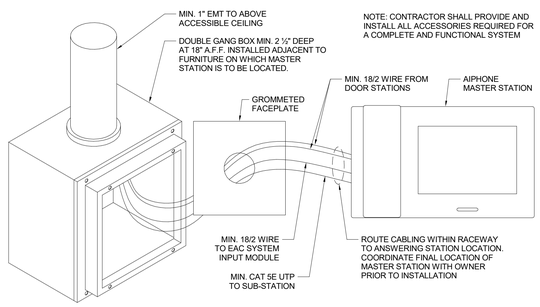

9 VIDEO INTERCOM MASTER STATION
N.T.S. AS

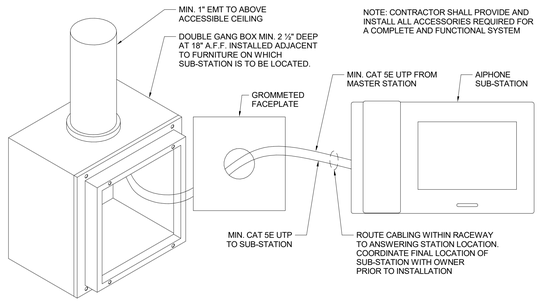

10 VIDEO INTERCOM - DESK MOUNTED SUB-STATION
N.T.S. AS

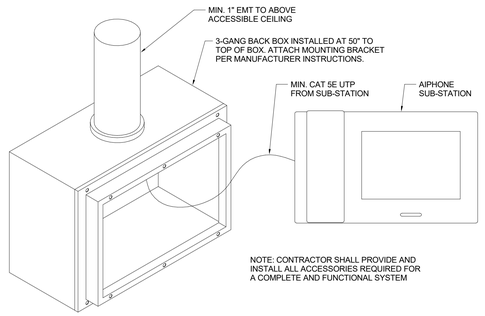

11 VIDEO INTERCOM - WALL MOUNTED SUB-STATION
N.T.S. AS

BCSC TOGETHER WE LEARN

CSO
8831 Keystone Crossing, Indianapolis, IN 46240
317.848.7800 | csoinc.net

© 2018 CSO Architects, Inc. All Rights Reserved

Höweler+Yoon Architecture
617.517.4101 howeleryoon.com

DESIGN 27 TECHNOLOGY + ACOUSTICS
1650 EAST 49TH STREET
INDIANAPOLIS, IN 46205
317.536.8000
WWW.DESIGN27.COM

PROJECT:
BARTHOLOMEW CONSOLIDATED SCHOOL CORPORATION
MAPLE GROVE ELEMENTARY
TIPTON LAKES BLVD, COLUMBUS, IN 47201

SCOPE DRAWINGS:
These drawings indicate the general scope of the project including the approximate locations of major equipment in the building, the major architectural elements and the type of structural, mechanical and electrical systems.
The drawings do not necessarily indicate or describe all work required for full performance and completion of the contract documents.
On the basis of the general scope indicated or described, the trade contractors shall furnish all items required for the proper execution and completion of the work.

REVISIONS:

1	ADDENDUM #2	06/17/25

ISSUE DATE	DRAWN BY	CHECKED BY
05/30/2025	MKD	JKK

DRAWING TITLE:
SECURITY DETAILS

CERTIFIED BY:
REGISTERED COMMUNICATIONS DISTRIBUTION DESIGNER
Bicsi
Jared Klingler
BICSI ID # 407182
EXPIRES 12-31-27
RCDD

DRAWING NUMBER
T402

PROJECT NUMBER
2024022

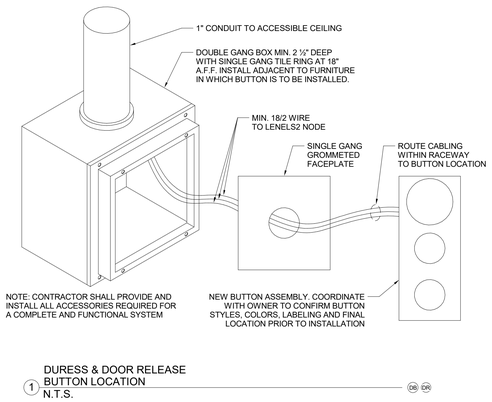

1 DURESS & DOOR RELEASE BUTTON LOCATION
N.T.S.

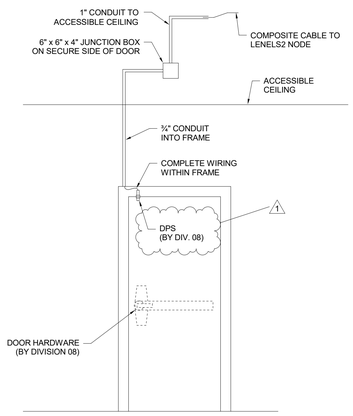

2 EAC DOOR TYPE S1 - MONITORING ONLY
N.T.S.

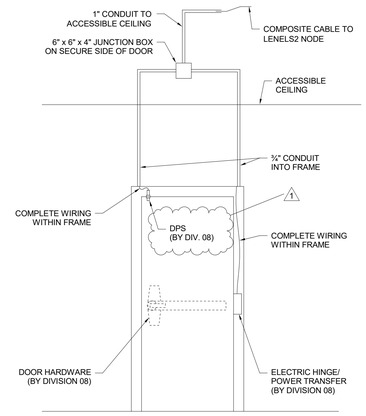

3 EAC DOOR TYPE S2EH - ELECTRIFIED HARDWARE
N.T.S.

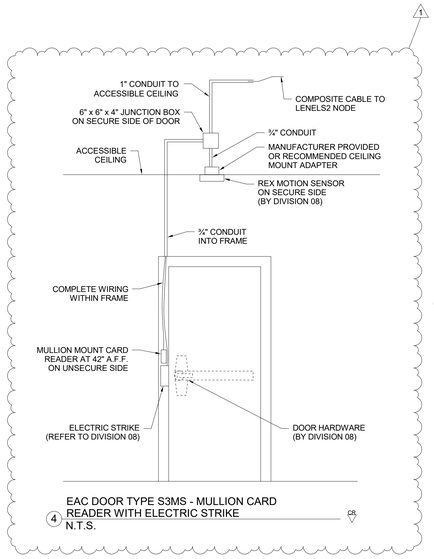

4 EAC DOOR TYPE S3MS - MULLION CARD READER WITH ELECTRIC STRIKE
N.T.S.

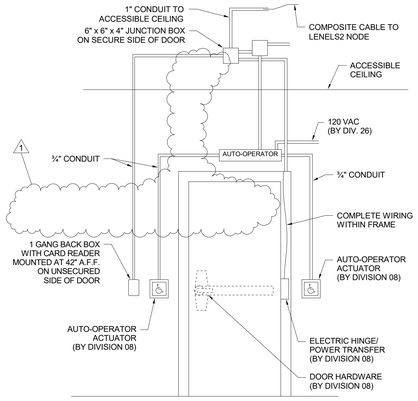

5 EAC DOOR TYPE S3A - CARD READER WITH ADA OPERATION
N.T.S.

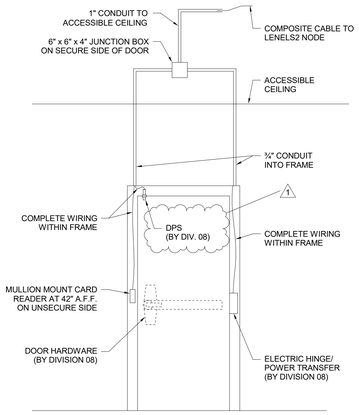

6 EAC DOOR TYPE S3M - MULLION MOUNT CARD READER
N.T.S.

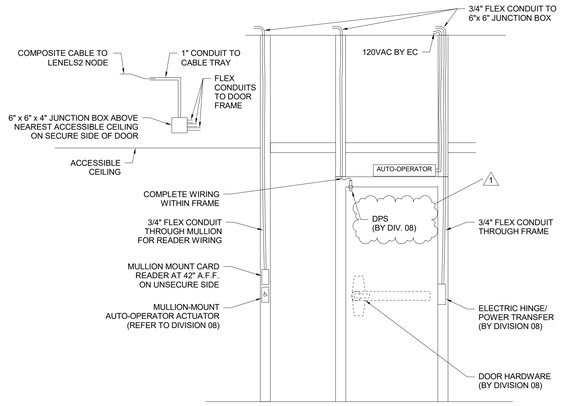

7 EAC DOOR TYPE S3MA - MULLION MOUNT CARD READER WITH ADA OPERATION
N.T.S.

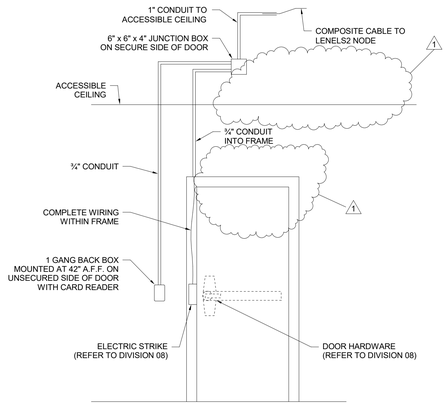

8 EAC DOOR TYPE S3S - CARD READER WITH ELECTRIC STRIKE
N.T.S.

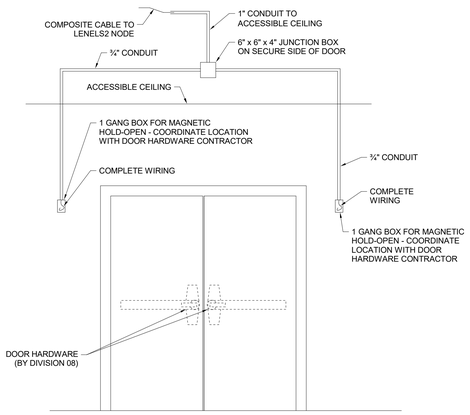

9 EAC DOOR TYPE D1MH - MAGNETIC HOLD OPEN
N.T.S.

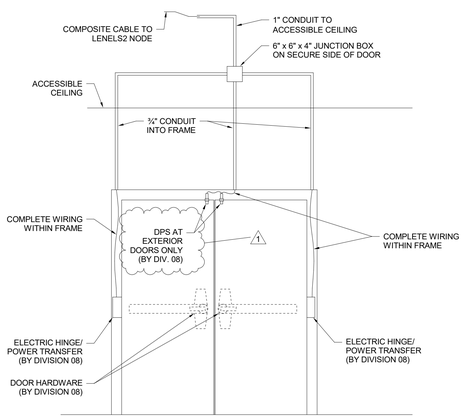

10 EAC DOOR TYPE D2EH - ELECTRIFIED HARDWARE
N.T.S.

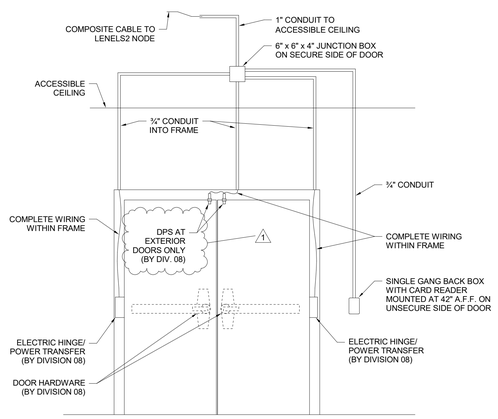

11 EAC DOOR TYPE D3 - CARD READER
N.T.S.

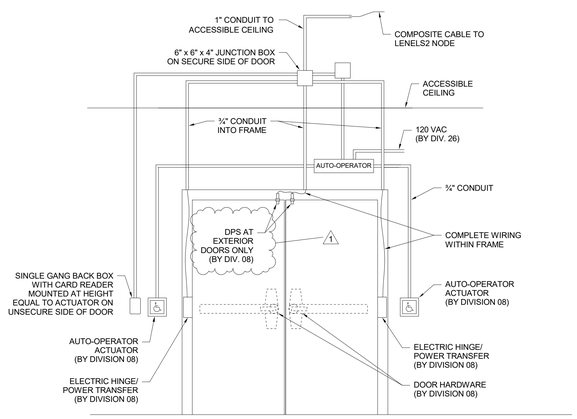

12 EAC DOOR TYPE D3A - CARD READER WITH ADA OPERATION
N.T.S.

BCSC TOGETHER WE LEARN

CSO
8831 Keystone Crossing, Indianapolis, IN 46240
317.848.7800 | csoinc.net

© 2018 CSO Architects, Inc. All Rights Reserved

Höweler+Yoon Architecture
617.517.4101 howeleryoon.com

DESIGN 27 TECHNOLOGY + ACOUSTICS
1650 EAST 49TH STREET
INDIANAPOLIS, IN 46205
317.536.8000
WWW.DESIGN27.COM

PROJECT:
BARTHOLOMEW CONSOLIDATED SCHOOL CORPORATION
MAPLE GROVE ELEMENTARY
TIPTON LAKES BLVD, COLUMBUS, IN 47201

SCOPE DRAWINGS:
These drawings indicate the general scope of the project in terms of architectural design concept, the dimensions of the building, the major architectural elements and the type of structural, mechanical and electrical systems.
The drawings do not necessarily indicate or describe all work required for the performance and completion of the requirements of the Contract.
On the basis of the general scope indicated or described, the trade contractors shall furnish all items required for the proper execution and completion of the work.

REVISIONS:

1	ADDENDUM #2	06/17/25

ISSUE DATE	DRAWN BY	CHECKED BY
05/30/2025	MKD	JKK

DRAWING TITLE:
SECURITY DETAILS

CERTIFIED BY:
REGISTERED COMMUNICATIONS DISTRIBUTION DESIGNER
Bicsi
Jared Klingler
BICSI ID # 407182
EXPIRES 12-31-27
RCDD

DRAWING NUMBER
T403

PROJECT NUMBER
2024022

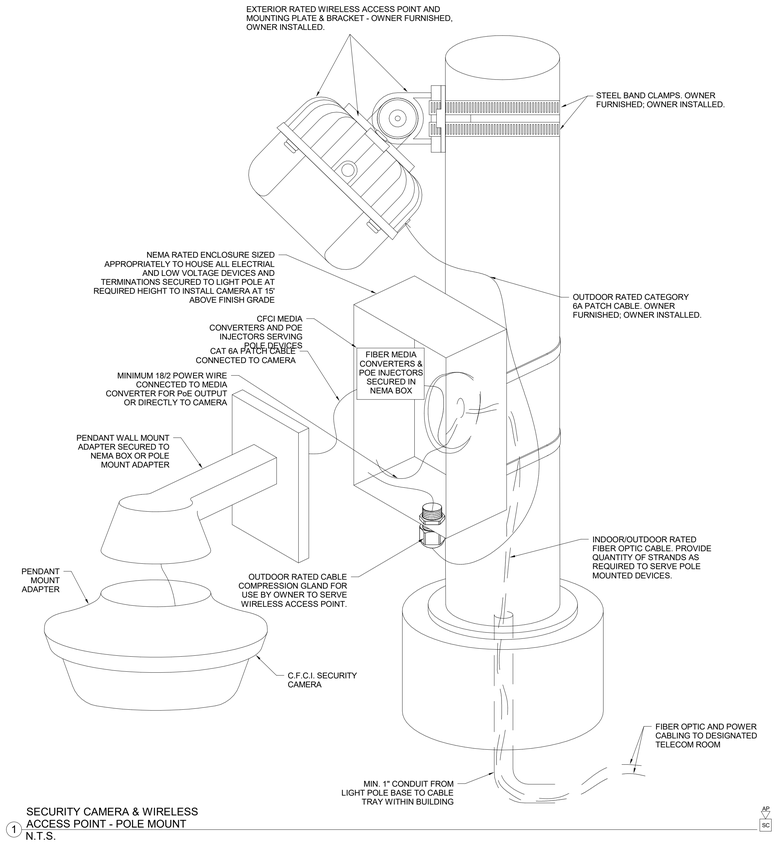

1 SECURITY CAMERA & WIRELESS ACCESS POINT - POLE MOUNT
N.T.S.

BCSC TOGETHER WE LEARN

CSO
8831 Keystone Crossing, Indianapolis, IN 46240
317.848.7800 | csoinc.net

© 2018 CSO Architects, Inc. All Rights Reserved

Höweler+Yoon Architecture
617.517.4101 howeleryoon.com

DESIGN 27 TECHNOLOGY +ACOUSTICS
1650 EAST 49TH STREET
INDIANAPOLIS, IN 46205
317.536.8000
WWW.DESIGN27.COM

PROJECT:
BARTHOLOMEW CONSOLIDATED SCHOOL CORPORATION
MAPLE GROVE ELEMENTARY
TIPTON LAKES BLVD, COLUMBUS, IN 47201

SCOPE DRAWINGS:
These drawings indicate the general scope of the project in terms of architectural design concept, the dimensions of the building, the major architectural elements and the type of structural, mechanical and electrical systems.
The drawings do not necessarily indicate or describe all work required for full performance and completion of the requirements of the Contract.
On the basis of the general scope indicated or described, the trade contractors shall furnish all items required for the proper execution and completion of the work.

REVISIONS:

1	ADDENDUM #2	06/17/25

ISSUE DATE	DRAWN BY	CHECKED BY
05/30/2025	MKD	JKK

DRAWING TITLE:
SECURITY DETAILS

CERTIFIED BY:
REGISTERED COMMUNICATIONS DISTRIBUTION DESIGNER
Bicsi
Jared Klingler
BICSI ID # 407182
EXPIRES 12-31-27
RCDD

DRAWING NUMBER
T404

PROJECT NUMBER
2024022

IDF A112 ACCESS CONTROL SCHEDULE

DOOR NUMBER	PANEL LOCATION	LABEL	DOOR TYPE / DESCRIPTION
100A-1	A112	100A-1-CR	EAC DOOR TYPE S3M
100B-1	A112	100B-1-CR	EAC DOOR TYPE S3M
102-2	A112	102-2-DPS	EAC DOOR TYPE S1
200A-1	A112	200A-1-DPS	EAC DOOR TYPE S1
200B-1	A112	200B-1-DPS	EAC DOOR TYPE S1
209-2	A112	209-2-DPS	EAC DOOR TYPE S1
C102	A112	C102-MH	EAC DOOR TYPE D1MH
C202	A112	C202-MH	EAC DOOR TYPE D1MH
S103-3	A112	S103-3-CR	EAC DOOR TYPE D3
S104-3	A112	S104-3-CR	EAC DOOR TYPE D3
V101-1	A112	V101-1-CR	EAC DOOR TYPE D3A
V101-2	A112	V101-2-EH	EAC DOOR TYPE D2EH
V101-3	A112	V101-3-CR	EAC DOOR TYPE S3A
V101-4	A112	V101-4-EH	EAC DOOR TYPE D2EH
V101-5	A112	V101-5-CR	EAC DOOR TYPE D3
Grand total: 15			

IDF B129 ACCESS CONTROL SCHEDULE

DOOR NUMBER	PANEL LOCATION	LABEL	DOOR TYPE / DESCRIPTION
100A-2	B129	100A-2-CR	EAC DOOR TYPE S3M
100B-2	B129	100B-2-CR	EAC DOOR TYPE S3M
109-2	B129	109-2-DPS	EAC DOOR TYPE S1
131-2	B129	131-2-DPS	EAC DOOR TYPE S1
138-2	B129	138-2-DPS	EAC DOOR TYPE S1
200A-2	B129	200A-2-DPS	EAC DOOR TYPE S1
200B-2	B129	200B-2-DPS	EAC DOOR TYPE S1
238-2	B129	238-2-DPS	EAC DOOR TYPE S1
C203	B129	C203-MH	EAC DOOR TYPE D1MH
S105-3	B129	S105-3-CR	EAC DOOR TYPE D3
S106-3	B129	S106-3-CR	EAC DOOR TYPE D3
V102-1	B129	V102-1-CR	EAC DOOR TYPE D3
Grand total: 12			

1

IDF C164 ACCESS CONTROL SCHEDULE

DOOR NUMBER	PANEL LOCATION	LABEL	DOOR TYPE / DESCRIPTION
140-2	C164	140-2-CR	EAC DOOR TYPE S3M
166-2	C164	166-2-CR	EAC DOOR TYPE S3S
168-1	C164	168-1-CR	EAC DOOR TYPE S3MS
168-2	C164	168-2-CR	EAC DOOR TYPE S3S
V103-1	C164	V103-1-CR	EAC DOOR TYPE S3MA
V103-2	C164	V103-2-EH	EAC DOOR TYPE D2EH
V103-3	C164	V103-3-EH	EAC DOOR TYPE S2EH
V103-4	C164	V103-4-DPS	EAC DOOR TYPE S1
V103-5	C164	V103-5-CR	EAC DOOR TYPE D3A
V103-6	C164	V103-6-CR	EAC DOOR TYPE S3S
Grand total: 10			

MDF D186 ACCESS CONTROL SCHEDULE

DOOR NUMBER	PANEL LOCATION	LABEL	DOOR TYPE / DESCRIPTION
179-2	D186	179-2-DPS	EAC DOOR TYPE S1
181-1	D186	181-1-CR	EAC DOOR TYPE D3
V104-1	D186	V104-1-CR	EAC DOOR TYPE D3
Grand total: 3			

MDF D186 TECHNOLOGY SCHEDULE

ROOM NUMBER	LABEL	TELECOM ROOM	DATA PORTS	COMMENTS
D171	D186-A-01	D186	1	WALL PHONE LOCATION
D172	D186-A-02	D186	1	WALL PHONE LOCATION
D171	D186-A-03/04	D186	2	MONITOR LOCATION
D172	D186-A-05/06	D186	2	DATA VOICE LOCATION
D172A	D186-A-07/08	D186	2	DATA VOICE LOCATION
D172B	D186-A-09/10	D186	2	DATA VOICE LOCATION
D172B	D186-A-11/12	D186	2	DATA VOICE LOCATION
D173	D186-A-13/14/15/16	D186	4	FLOOR BOX LOCATION
D175	D186-A-17/18	D186	2	DATA VOICE LOCATION
D176	D186-A-19/20	D186	2	DATA VOICE LOCATION
D176	D186-A-21/22	D186	2	DATA VOICE LOCATION
D179A	D186-A-23/24	D186	2	DATA VOICE LOCATION
D183	D186-A-25/26	D186	2	DATA VOICE LOCATION
D183	D186-A-27/28	D186	2	DATA VOICE LOCATION
D186	D186-A-29/30	D186	2	DATA VOICE LOCATION
D171	D186-B-01/02	D186	2	WIRELESS ACCESS POINT - WALL MOUNTED
D171	D186-B-03/04	D186	2	WIRELESS ACCESS POINT - WALL MOUNTED
D172	D186-B-07/08	D186	2	WIRELESS ACCESS POINT - WALL MOUNTED
D172	D186-B-05/06	D186	2	WIRELESS ACCESS POINT - WALL MOUNTED
D175	D186-B-07/08	D186	2	WIRELESS ACCESS POINT - CEILING MOUNTED
D175	D186-B-09/10	D186	2	WIRELESS ACCESS POINT - CEILING MOUNTED
D181	D186-B-11/12	D186	2	WIRELESS ACCESS POINT - CEILING MOUNTED
SITE	D186-B-13/14	D186	2	WIRELESS ACCESS POINT - POLE MOUNTED
SITE	D186-B-15/16	D186	2	WIRELESS ACCESS POINT - POLE MOUNTED
C101	D186-C-01	D186	1	SECURITY CAMERA - CEILING MOUNTED
C107	D186-C-02	D186	1	SECURITY CAMERA - WALL MOUNTED 9" BELOW CEILING
D171	D186-C-03	D186	1	SECURITY CAMERA -WALL MOUNTED AT 11' A.F.F.
D171	D186-C-04	D186	1	SECURITY CAMERA - WALL MOUNTED
D172	D186-C-05	D186	1	SECURITY CAMERA -WALL MOUNTED AT 11' A.F.F.
D172	D186-C-06	D186	1	SECURITY CAMERA -WALL MOUNTED AT 11' A.F.F.
D173	D186-C-07	D186	1	SECURITY CAMERA - CEILING MOUNTED
D173	D186-C-08	D186	1	SECURITY CAMERA - CEILING MOUNTED
D179	D186-C-09/10	D186	2	BMS DATA LOCATION
D181	D186-C-11	D186	1	SECURITY CAMERA - CEILING MOUNTED
SITE	D186-C-12	D186	1	SECURITY CAMERA - POLE MOUNTED
SITE	D186-C-13	D186	1	SECURITY CAMERA - POLE MOUNTED
SITE	D186-C-14	D186	1	SECURITY CAMERA - POLE MOUNTED
SITE	D186-C-15	D186	1	SECURITY CAMERA - POLE MOUNTED
SITE	D186-C-16	D186	1	SECURITY CAMERA - POLE MOUNTED
SITE	D186-C-17	D186	1	SECURITY CAMERA - POLE MOUNTED
SITE	D186-C-18	D186	1	SECURITY CAMERA - POLE MOUNTED
V104	D186-C-19	D186	1	SECURITY CAMERA - CEILING MOUNTED
Grand total			67	

IDF A112 TECHNOLOGY SCHEDULE

ROOM NUMBER	LABEL	TELECOM ROOM	DATA PORTS	COMMENTS
A117A	A112-A-01	A112	1	WALL PHONE LOCATION
D171A	A112-B-02	A112	1	WALL PHONE LOCATION
A100A	A112-A-02	A112	1	VIDEOBOARD LOCATION
A100A	A112-A-03/04	A112	2	DATA VOICE LOCATION
A100B	A112-A-05	A112	1	VIDEOBOARD LOCATION
A100B	A112-A-06/07	A112	2	DATA VOICE LOCATION
A101	A112-A-08	A112	1	VIDEOBOARD LOCATION
A101	A112-A-09/10	A112	2	DATA VOICE LOCATION
A102	A112-A-11	A112	1	VIDEOBOARD LOCATION
A102	A112-A-12/13	A112	2	DATA VOICE LOCATION
A104	A112-A-14	A112	1	VIDEOBOARD LOCATION
A104	A112-A-15/16	A112	2	DATA VOICE LOCATION
A105	A112-A-17	A112	1	VIDEOBOARD LOCATION
A105	A112-A-18/19	A112	2	DATA VOICE LOCATION
A106	A112-A-20	A112	1	VIDEOBOARD LOCATION
A106	A112-A-21/22	A112	2	DATA VOICE LOCATION
A107	A112-A-23/24	A112	2	DATA VOICE LOCATION
A107	A112-A-25	A112	1	VIDEOBOARD LOCATION
A109	A112-A-26	A112	1	VIDEOBOARD LOCATION
A109	A112-A-27/28	A112	2	DATA VOICE LOCATION
A110	A112-A-29/30	A112	2	DATA VOICE LOCATION
A110	A112-A-31/32	A112	2	DATA VOICE LOCATION
A112	A112-A-33/34	A112	2	DATA VOICE LOCATION
A117	A112-A-35/36	A112	2	DATA VOICE LOCATION
A117	A112-A-37/38	A112	2	DATA VOICE LOCATION
A117A	A112-A-39/40	A112	2	DATA VOICE LOCATION
A119	A112-A-41	A112	1	VIDEOBOARD LOCATION
A119	A112-A-42/43	A112	2	DATA VOICE LOCATION
D101	A112-A-44/45	A112	2	MONITOR LOCATION
D171A	A112-A-46/47	A112	2	DATA VOICE LOCATION
D171A	A112-A-48; A112-B-01	A112	2	DATA VOICE LOCATION
A100B	A112-C-01/02	A112	2	WIRELESS ACCESS POINT - WALL MOUNTED
A101	A112-C-03/04	A112	2	WIRELESS ACCESS POINT - CEILING MOUNTED
A102	A112-C-05/06	A112	2	WIRELESS ACCESS POINT - CEILING MOUNTED
A104	A112-C-07/08	A112	2	WIRELESS ACCESS POINT - CEILING MOUNTED
A105	A112-C-09/10	A112	2	WIRELESS ACCESS POINT - CEILING MOUNTED
A106	A112-C-11/12	A112	2	WIRELESS ACCESS POINT - CEILING MOUNTED
A107	A112-C-13/14	A112	2	WIRELESS ACCESS POINT - CEILING MOUNTED
A109	A112-C-15/16	A112	2	WIRELESS ACCESS POINT - CEILING MOUNTED
A119	A112-C-17/18	A112	2	WIRELESS ACCESS POINT - CEILING MOUNTED
A1001	A112-C-19/20	A112	2	WIRELESS ACCESS POINT - WALL MOUNTED
D171	D186-B-03/04	A112	2	WIRELESS ACCESS POINT - WALL MOUNTED
A100A	A112-D-01	A112	1	SECURITY CAMERA -WALL MOUNTED AT 9' 6" A.F.F.
A100B	A112-D-02	A112	1	SECURITY CAMERA -WALL MOUNTED AT 9' 6" A.F.F.
A103	A112-D-03/04	A112	2	BMS DATA LOCATION
A108	A112-D-05/06	A112	2	BMS DATA LOCATION
C101	A112-D-07	A112	1	SECURITY CAMERA - CORNER MOUNTED AT 8' 11" A.F.F.
C102	A112-D-08	A112	1	SECURITY CAMERA - CEILING MOUNTED
D170	A112-D-09	A112	1	SECURITY CAMERA - CEILING MOUNTED
D171	A112-D-10	A112	1	SECURITY CAMERA -WALL MOUNTED AT 11' A.F.F.
D171	C164-D-08	A112	1	SECURITY CAMERA - WALL MOUNTED 9" BELOW CEILING
EXT	A112-D-11	A112	1	SECURITY CAMERA -WALL MOUNTED AT 11' A.F.F.
EXT	A112-D-12	A112	1	SECURITY CAMERA - SOFFIT MOUNTED
EXT	A112-D-13	A112	1	SECURITY CAMERA - SOFFIT MOUNTED
EXT	A112-D-14	A112	1	SECURITY CAMERA - SOFFIT MOUNTED
EXT	A112-D-15	A112	1	SECURITY CAMERA - SOFFIT MOUNTED
EXT	A112-D-16	A112	1	SECURITY CAMERA - SOFFIT MOUNTED
S103	A112-D-17	A112	1	SECURITY CAMERA - CEILING MOUNTED
S104	A112-D-18	A112	1	SECURITY CAMERA - CEILING MOUNTED
V101	A112-D-19	A112	1	SECURITY CAMERA - CEILING MOUNTED
Grand total			92	

IDF B129 TECHNOLOGY SCHEDULE

ROOM NUMBER	LABEL	TELECOM ROOM	DATA PORTS	COMMENTS
120	B129-A-01/02	B129	2	FLOOR BOX LOCATION
120	B129-A-03/04	B129	2	FLOOR BOX LOCATION
120	B129-A-05/06	B129	2	FLOOR BOX LOCATION
120	B129-A-07/08	B129	2	FLOOR BOX LOCATION
120	B129-A-09/10	B129	2	FLOOR BOX LOCATION
120	B129-A-11/12	B129	2	FLOOR BOX LOCATION
120	B129-A-13/14	B129	2	FLOOR BOX LOCATION
120	B129-A-15/16	B129	2	FLOOR BOX LOCATION
120	B129-A-17/18	B129	2	FLOOR BOX LOCATION
B100A	B129-A-19	B129	1	VIDEOBOARD LOCATION
B100A	B129-A-20/21	B129	2	DATA VOICE LOCATION
B100B	B129-A-22	B129	1	VIDEOBOARD LOCATION
B100B	B129-A-23/24	B129	2	DATA VOICE LOCATION
B121	B129-A-25	B129	1	VIDEOBOARD LOCATION
B121	B129-A-26/27	B129	2	DATA VOICE LOCATION
B121	B129-A-28/29	B129	2	DATA VOICE LOCATION
B121	B129-A-30/31	B129	2	DATA VOICE LOCATION
B122	B129-B-21/22	B129	2	DATA VOICE LOCATION
B123	B129-A-32/33	B129	2	DATA VOICE LOCATION
B123	B129-A-34/35	B129	2	DATA VOICE LOCATION
B123	B129-A-36/37	B129	2	DATA VOICE LOCATION
B123	B129-A-38/39	B129	2	DATA VOICE LOCATION
B123	B129-B-23	B129	1	VIDEOBOARD LOCATION
B128	B129-A-40/41	B129	2	DATA VOICE LOCATION
B129	B129-A-42/43	B129	2	DATA VOICE LOCATION
B130	B129-A-44	B129	1	VIDEOBOARD LOCATION
B130	B129-A-45/46	B129	2	DATA VOICE LOCATION
B131	B129-A-47	B129	1	VIDEOBOARD LOCATION
B131	B129-A-48; B129-B-01	B129	2	DATA VOICE LOCATION
B133	B129-B-02	B129	1	VIDEOBOARD LOCATION
B133	B129-B-03/04	B129	2	DATA VOICE LOCATION
B134	B129-B-05	B129	1	VIDEOBOARD LOCATION
B134	B129-B-06/07	B129	2	DATA VOICE LOCATION
B135	B129-B-08	B129	1	VIDEOBOARD LOCATION
B135	B129-B-09/10	B129	2	DATA VOICE LOCATION
B136	B129-B-11	B129	1	VIDEOBOARD LOCATION
B136	B129-B-12/13	B129	2	DATA VOICE LOCATION
B138	B129-B-14	B129	1	VIDEOBOARD LOCATION
B138	B129-B-15/16	B129	2	DATA VOICE LOCATION
B139	B129-B-17/18	B129	2	DATA VOICE LOCATION
B139	B129-B-19/20	B129	2	DATA VOICE LOCATION
B100A	B129-C-01/02	B129	2	WIRELESS ACCESS POINT - WALL MOUNTED
B100B	B129-C-03/04	B129	2	WIRELESS ACCESS POINT - WALL MOUNTED
B120	B129-C-05/06	B129	2	WIRELESS ACCESS POINT - WALL MOUNTED
B120	B129-C-07/08	B129	2	WIRELESS ACCESS POINT - WALL MOUNTED
B121	B129-C-09/10	B129	2	WIRELESS ACCESS POINT - CEILING MOUNTED
B130	B129-C-11/12	B129	2	WIRELESS ACCESS POINT - CEILING MOUNTED
B131	B129-C-13/14	B129	2	WIRELESS ACCESS POINT - CEILING MOUNTED
B133	B129-C-15/16	B129	2	WIRELESS ACCESS POINT - CEILING MOUNTED
B134	B129-C-17/18	B129	2	WIRELESS ACCESS POINT - CEILING MOUNTED
B135	B129-C-19/20	B129	2	WIRELESS ACCESS POINT - CEILING MOUNTED
B136	B129-C-21/22	B129	2	WIRELESS ACCESS POINT - CEILING MOUNTED
B138	B129-C-23/24	B129	2	WIRELESS ACCESS POINT - CEILING MOUNTED
B100A	B129-D-01	B129	1	SECURITY CAMERA -WALL MOUNTED AT 9' 6" A.F.F.
B100B	B129-D-02	B129	1	SECURITY CAMERA -WALL MOUNTED AT 9' 6" A.F.F.
B120	B129-D-03	B129	1	SECURITY CAMERA -WALL MOUNTED AT 9' 6" A.F.F.
B120	B129-D-04	B129	1	SECURITY CAMERA -WALL MOUNTED AT 9' 6" A.F.F.
B120	B129-D-05	B129	1	SECURITY CAMERA -WALL MOUNTED
B132	B129-D-06/07	B129	2	BMS DATA LOCATION
B137	B129-D-08/09	B129	2	BMS DATA LOCATION
C103	B129-D-11	B129	1	SECURITY CAMERA - CEILING MOUNTED
S105	B129-D-12	B129	1	SECURITY CAMERA - CEILING MOUNTED
S106	B129-D-13	B129	1	SECURITY CAMERA - CEILING MOUNTED
V102	B129-D-14	B129	1	SECURITY CAMERA - CEILING MOUNTED
Grand total			108	

IDF C164 TECHNOLOGY SCHEDULE

ROOM NUMBER	LABEL	TELECOM ROOM	DATA PORTS	COMMENTS
C143	C164-A-01	C164	1	WALL PHONE LOCATION
C146B	C164-A-02	C164	1	WALL PHONE LOCATION
C140	C164-A-03	C164	1	VIDEOBOARD LOCATION
C140	C164-A-04/05	C164	2	DATA VOICE LOCATION
C141	C164-A-06/07	C164	2	DATA VOICE LOCATION
C141	C164-A-08/09	C164	2	DATA VOICE LOCATION
C143	C164-A-10/11	C164	2	DATA VOICE LOCATION
C143	C164-A-12/13	C164	2	DATA VOICE LOCATION
C144	C164-A-14/15	C164	2	DATA VOICE LOCATION
C144	C164-A-16/17	C164	2	DATA VOICE LOCATION
C145	C164-A-18/19	C164	2	DATA VOICE LOCATION
C145	C164-A-20/21	C164	2	DATA VOICE LOCATION
C146	C164-A-24/25	C164	2	DATA VOICE LOCATION
C146	C164-A-22/23	C164	2	DATA VOICE LOCATION
C148	C164-A-26/27	C164	2	DATA VOICE LOCATION
C148	C164-A-28/29	C164	2	DATA VOICE LOCATION
C150	C164-A-30/31	C164	2	DATA VOICE LOCATION
C150	C164-A-32/33	C164	2	DATA VOICE LOCATION
C151	C164-A-34/35	C164	2	DATA VOICE LOCATION
C151	C164-A-36/37	C164	2	DATA VOICE LOCATION
C152	C164-A-38/39	C164	2	DATA VOICE LOCATION
C152	C164-A-40/41	C164	2	DATA VOICE LOCATION
C153	C164-A-42/43	C164	2	MONITOR LOCATION
C153	C164-A-44/45	C164	2	DATA VOICE LOCATION
C153	C164-A-46/47	C164	2	AV FLOOR BOX LOCATION
C159	C164-A-48; C164-B-01	C164	2	DATA VOICE LOCATION
C159	C164-B-02/03	C164	2	DATA VOICE LOCATION
C159	C164-B-34/35	C164	2	MONITOR LOCATION
C160	C164-B-36/37	C164	2	DATA VOICE LOCATION
C160	C164-B-38/39	C164	2	DATA VOICE LOCATION
C162	C164-B-04/05	C164	2	DATA VOICE LOCATION
C162	C164-B-06/07	C164	2	DATA VOICE LOCATION
C164	C164-B-08/09	C164	2	DATA VOICE LOCATION
C165	C164-B-10/11	C164	2	DATA VOICE LOCATION
C165	C164-B-12/13	C164	2	DATA VOICE LOCATION
C166	C164-B-14/15	C164	2	DATA VOICE LOCATION
C166	C164-B-16/17	C164	2	MONITOR LOCATION
C167	C164-B-18/19	C164	2	DATA VOICE LOCATION
C168	C164-B-20/21/22/23	C164	4	DATA VOICE LOCATION
C168	C164-B-24/25/26/27	C164	4	DATA VOICE LOCATION
C168	C164-B-28/29	C164	2	DATA VOICE LOCATION
C168	C164-B-30/31	C164	2	DATA VOICE LOCATION
V103	C164-B-32/33	C164	2	DATA VOICE LOCATION
C104	C164-C-01/02	C164	2	WIRELESS ACCESS POINT - CEILING MOUNTED
C106	C164-C-03/04	C164	2	WIRELESS ACCESS POINT - CEILING MOUNTED
C106	C164-C-05/06	C164	2	WIRELESS ACCESS POINT - CEILING MOUNTED
C140	C164-C-07/08	C164	2	WIRELESS ACCESS POINT - CEILING MOUNTED
C143	C164-C-09/10	C164	2	WIRELESS ACCESS POINT - CEILING MOUNTED
C106	C164-D-01	C164	1	SECURITY CAMERA - CEILING MOUNTED
C144	C164-D-02	C164	1	SECURITY CAMERA - CEILING MOUNTED
C149	C164-D-03/04	C164	2	BMS DATA LOCATION
C168	C164-D-05	C164	1	SECURITY CAMERA - CEILING MOUNTED
C168	C164-D-06	C164	1	SECURITY CAMERA - CEILING MOUNTED
EXT	C164-D-07	C164	1	SECURITY CAMERA - MOUNT TO COLUMN AT 10' A.F.F.
Grand total			104	

IDF A212 TECHNOLOGY SCHEDULE

ROOM NUMBER	LABEL	TELECOM ROOM	DATA PORTS	COMMENTS
A218	A212-A-01	A212	1	WALL PHONE LOCATION
A200A	A212-A-02	A212	1	VIDEOBOARD LOCATION
A200A	A212-A-03/04	A212	2	DATA VOICE LOCATION
A200B	A212-A-05	A212	1	VIDEOBOARD LOCATION
A200B	A212-A-06/07	A212	2	DATA VOICE LOCATION
A201	A212-A-08	A212	1	VIDEOBOARD LOCATION
A201	A212-A-09/10	A212	2	DATA VOICE LOCATION
A202	A212-A-11	A212	1	VIDEOBOARD LOCATION
A202	A212-A-12/13	A212	2	DATA VOICE LOCATION
A204	A212-A-14	A212	1	VIDEOBOARD LOCATION
A204	A212-A-15/16	A212	2	DATA VOICE LOCATION
A205	A212-A-17	A212	1	VIDEOBOARD LOCATION
A205	A212-A-18/19	A212	2	DATA VOICE LOCATION
A206	A212-A-20	A212	1	VIDEOBOARD LOCATION
A206	A212-A-21/22	A212	2	DATA VOICE LOCATION
A207	A212-A-23/24	A212	2	DATA VOICE LOCATION
A207	A212-A-25	A212	1	VIDEOBOARD LOCATION
A209	A212-A-26	A212	1	VIDEOBOARD LOCATION
A209	A212-A-27/28	A212	2	DATA VOICE LOCATION
A210	A212-A-29/30	A212	2	DATA VOICE LOCATION
A210	A212-A-31/32	A212	2	DATA VOICE LOCATION
A216	A212-A-35/36	A212	2	DATA VOICE LOCATION
A216	A212-A-37/38	A212	2	DATA VOICE LOCATION
A216	A212-A-39/40	A212	2	DATA VOICE LOCATION
A218	A212-A-41/42	A212	2	DATA VOICE LOCATION
A220	A212-A-43	A212	1	VIDEOBOARD LOCATION
A220	A212-A-44/45	A212	2	DATA VOICE LOCATION
A200A	A212-B-01/02	A212	2	WIRELESS ACCESS POINT - WALL MOUNTED
A200B	A212-B-03/04	A212	2	WIRELESS ACCESS POINT - WALL MOUNTED
A201	A212-B-05/06	A212	2	WIRELESS ACCESS POINT - CEILING MOUNTED
A202	A212-B-07/08	A212	2	WIRELESS ACCESS POINT - CEILING MOUNTED
A204	A212-B-09/10	A212	2	WIRELESS ACCESS POINT - CEILING MOUNTED
A205	A212-B-11/12	A212	2	WIRELESS ACCESS POINT - CEILING MOUNTED
A206	A212-B-13/14	A212	2	WIRELESS ACCESS POINT - CEILING MOUNTED
A207	A212-B-15/16	A212	2	WIRELESS ACCESS POINT - CEILING MOUNTED
A209	A212-B-17/18	A212	2	WIRELESS ACCESS POINT - CEILING MOUNTED
A220	A212-B-19/20	A212	2	WIRELESS ACCESS POINT - CEILING MOUNTED
A200A	A212-C-01	A212	1	SECURITY CAMERA -WALL MOUNTED AT 9' 6" A.F.F.
A200B	A212-C-02	A212	1	SECURITY CAMERA -WALL MOUNTED AT 9' 6" A.F.F.
A203	A212-C-03/04	A212	2	BMS DATA LOCATION
A208	A212-C-05/06	A212	2	BMS DATA LOCATION
A219	A212-C-07/08	A212	2	BMS DATA LOCATION
A219	A212-C-09/10	A212	2	BMS DATA LOCATION
C202	A212-C-11	A212	1	SECURITY CAMERA - CEILING MOUNTED
C204	A212-C-12	A212	1	SECURITY CAMERA - CEILING MOUNTED
EXT	A212-C-13	A212	1	SECURITY CAMERA - SOFFIT MOUNTED
EXT	A212-C-14	A212	1	SECURITY CAMERA - SOFFIT MOUNTED
EXT	A212-C-15	A212	1	SECURITY CAMERA - SOFFIT MOUNTED
S202	A212-C-16	A212	1	SECURITY CAMERA - CEILING MOUNTED
S203	A212-C-17	A212	1	SECURITY CAMERA - CEILING MOUNTED
S204	A212-C-18	A212	1	SECURITY CAMERA - CEILING MOUNTED
Grand total			81	

IDF B229 TECHNOLOGY SCHEDULE

ROOM NUMBER	LABEL	TELECOM ROOM	DATA PORTS	COMMENTS
B200A	B229-A-01	B229	1	VIDEOBOARD LOCATION
B200A	B229-A-02/03	B229	2	DATA VOICE LOCATION
B200B	B229-A-04/05	B229	2	DATA VOICE LOCATION
B200B	B229-A-06	B229	1	VIDEOBOARD LOCATION
B219	B229-A-07	B229	1	VIDEOBOARD LOCATION
B219	B229-A-08/09	B229	2	DATA VOICE LOCATION
B223	B229-A-10/11	B229	2	DATA VOICE LOCATION
B223	B229-A-12/13	B229	2	DATA VOICE LOCATION
B223A	B229-A-14/15	B229	2	DATA VOICE LOCATION
B223A	B229-A-16/17	B229	2	DATA VOICE LOCATION
B230	B229-A-20	B229	1	VIDEOBOARD LOCATION
B230	B229-A-21/22	B229	2	DATA VOICE LOCATION
B231	B229-A-23	B229	1	VIDEOBOARD LOCATION
B231	B229-A-24/25	B229	2	DATA VOICE LOCATION
B233	B229-A-26	B229	1	VIDEOBOARD LOCATION
B233	B229-A-27/28	B229	2	DATA VOICE LOCATION
B234	B229-A-29	B229	1	VIDEOBOARD LOCATION
B234	B229-A-30/31	B229	2	DATA VOICE LOCATION
B235	B229-A-32	B229	1	VIDEOBOARD LOCATION
B235	B229-A-33/34	B229	2	DATA VOICE LOCATION
B236	B229-A-35	B229	1	VIDEOBOARD LOCATION
B236	B229-A-36/37	B229	2	DATA VOICE LOCATION
B238	B229-A-38	B229	1	VIDEOBOARD LOCATION
B238	B229-A-39/40	B229	2	DATA VOICE LOCATION
B239	B229-A-41/42	B229	2	DATA VOICE LOCATION
B239	B229-A-43/44	B229	2	DATA VOICE LOCATION
C204	B229-A-45/46	B229	2	DATA VOICE LOCATION
B200A	B229-B-01/02	B229	2	WIRELESS ACCESS POINT - WALL MOUNTED
B200B	B229-B-03/04	B229	2	WIRELESS ACCESS POINT - WALL MOUNTED
B219	B229-B-05/06	B229	2	WIRELESS ACCESS POINT - CEILING MOUNTED
B230	B229-B-07/08	B229	2	WIRELESS ACCESS POINT - CEILING MOUNTED
B231	B229-B-09/10	B229	2	WIRELESS ACCESS POINT - CEILING MOUNTED
B233	B229-B-11/12	B229	2	WIRELESS ACCESS POINT - CEILING MOUNTED
B234	B229-B-13/14	B229	2	WIRELESS ACCESS POINT - CEILING MOUNTED
B235	B229-B-15/16	B229	2	WIRELESS ACCESS POINT - CEILING MOUNTED
B236	B229-B-17/18	B229	2	WIRELESS ACCESS POINT - CEILING MOUNTED
B238	1B229-B-19/20	B229	2	WIRELESS ACCESS POINT - CEILING MOUNTED
B200A	B229-C-01	B229	1	SECURITY CAMERA -WALL MOUNTED AT 9' 6" A.F.F.
B200B	B229-C-02	B229	1	SECURITY CAMERA -WALL MOUNTED AT 9' 6" A.F.F.
B222	B229-C-03/04	B229	2	BMS DATA LOCATION
B222	B229-C-05/06	B229	2	BMS DATA LOCATION
B232	B229-C-07/08	B229	2	BMS DATA LOCATION
B237	B229-C-09/10	B229	2	BMS DATA LOCATION
C203	B229-C-11	B229	1	SECURITY CAMERA - CEILING MOUNTED
C204	B229-C-13	B229	1	SECURITY CAMERA - CORNER MOUNTED AT 8' 11" A.F.F.
C204	B229-C-12	B229	1	SECURITY CAMERA -WALL MOUNTED AT 9' 6" A.F.F.
EXT	B229-C-14	B229	1	SECURITY CAMERA - SOFFIT MOUNTED
EXT	B229-C-15	B229	1	SECURITY CAMERA - SOFFIT MOUNTED
EXT	B229-C-16	B229	1	SECURITY CAMERA - SOFFIT MOUNTED
EXT	B229-C-17	B229	1	SECURITY CAMERA - SOFFIT MOUNTED
S205	B229-C-18	B229	1	SECURITY CAMERA - CEILING MOUNTED
S206	B229-C-19	B229	1	SECURITY CAMERA - CEILING MOUNTED
Grand total			83	

BCSC
TOGETHER WE LEARN

CSO
8831 Keystone Crossing, Indianapolis, IN 46240
317.848.7800 | csoinc.net
© 2018 CSO Architects, Inc. All Rights Reserved

Höweler+Yoon Architecture
617.517.4101 howeleryoon.com

DESIGN 27 TECHNOLOGY +ACOUSTICS
1650 EAST 49TH STREET
INDIANAPOLIS, IN 46205
317.536.8000
WWW.DESIGN27.COM

PROJECT:
BARTHOLOMEW CONSOLIDATED SCHOOL CORPORATION
MAPLE GROVE ELEMENTARY
TIPTON LAKES BLVD, COLUMBUS, IN 47201

SCOPE DRAWINGS:
These drawings indicate the general scope of the project in terms of architectural design concept, the dimensions of the building, the major architectural elements and the type of structural, mechanical and electrical systems.
The drawings do not necessarily indicate or describe all work required for full performance and completion of the requirements of the Contract.
On the basis of the general scope indicated or described, the trade contractors shall furnish all items required for the proper execution and completion of the work.

REVISIONS:
1 ADDENDUM #2 06/17/25

ISSUE DATE	DRAWN BY	CHECKED BY
05/30/2025	MKD	JKK

DRAWING TITLE:
TECHNOLOGY/ SECURITY SCHEDULES

CERTIFIED BY:
REGISTERED COMMUNICATIONS DISTRIBUTION DESIGNER
Bicsi
Jared Klingler
BICSI ID # 407182
EXPIRES 12-31-27
RCDD

DRAWING NUMBER
T500

PROJECT NUMBER
2024022