ADDENDUM NO. 23

Date: 09.23.2026

Project:
Westfield Washington School Corporation
Bid Package 06, Bid Item #33
SR32 & Centennial Road New Roundabout Construction
17707 Centennial Road,
Westfield, IN. 46074

Owner:
C/O Westfield Washington School Corporation
19500 Tomlinson Road
Westfield, IN 46074

HAGERMAN

BUILDING A **BETTER** FUTURE

Construction Manager:
Hagerman, Inc
10315 Allisonville Road
Fishers, IN 46038

TO: All Interested Bidders of Record

This Addendum #23, Dated 09.23.2026, forms part of the contract documents and modifies the original Bidding Documents Dated 09.04.2026. Please acknowledge receipt of this Addendum in the space provided on the Bid Form. Failure to acknowledge this Addendum may subject the Bidder to disqualification.

The Hagerman, Inc portion of this Addendum consists of the following information:

I. GENERAL INFORMATION

1. This is for Addendum #23 Dated 09.23.2026. (Please note this is really Addendum #03 for the SR 32 and Centennial Road New Round About Project) but is sequentially Addendum #23 on the overall Westfield Washington School New Middle School West Project, so we will refer to it as Addendum #23.
2. This Addendum #23 generally shortens the length of the south intersection of the roundabout and has updated provided information appropriately.

II. CHANGES TO THE PROJECT CONTRACT MANUAL

1. All contractors shall review the attached A&F Engineering (and CSO Architects) Addendum #23 Dated 09.17.2026 and incorporate the changes made to the drawings and specifications into the respective bid item scope of bid.

2. All Bidders shall review the updated Section 00 01 15 List of Drawings.

3. It was brought to our attention that we did not have the most up to date Contractor's Bid For Public Work - Indiana State Form 96 document as a part of the bid documents. We have received and included the 2026 Contractor's Bid For Public Work Indiana State Form 96 document to the bid documents as a part of this Addendum #23 as Section 00 41 21 Indiana State Form 96.

4. All Bidders shall review the updated Section 00 41 21 – Indiana State Form 96.

5. Bid Item #33 SR32 & Centennial Road Roundabout Contractor can refer to the updated itemized quantities that have been supplied by A&F Engineering, but the contractors are responsible for their own quantity take-offs and estimate and bid quantities, as the south leg of the roundabout intersection has generally been shortened.

6. Bid Item #33 SR32 & Centennial Road Roundabout Contractor shall review the changes made to the various drawings in this Addendum #23.

III. DESIGN INFORMATION

1. A&F Engineering and CSO Addendum #23 Dated 09.17.2026

END OF SECTION

A&F ENGINEERING
Transportation & Site Engineering
Creating Order Since 1966

8365 Keystone Crossing, Suite 201
Indianapolis, Indiana 46240
(317) 202-0864
www.af-eng.com

ADDENDUM

ADDENDUM NO. 23

RE: Westfield Middle School – West

Date: September 17, 2026

By: Jeff Hill, A&F Engineering Company

This Addendum is issued in accordance with the provisions of "The General Conditions of the Contract for Construction," Article 1, "Contract Documents" and becomes a part of the Contract Documents as provided therein. This Addendum includes:

Addendum Pages: 1-2

Attached Documents: None

Attached Drawing Sheets: 2, 4-7, 15-16, 21, 23, 25-27, 38-40 of 47

PART 1 – GENERAL INFORMATION

1.1 Quantities

A. See attached information to be used for bidding purposes. The south leg of the intersection has generally been shortened and updated information has been provided for the roundabout project. The pay items in the itemized quantities are adjusted appropriately.

PART 2 – BIDDING REQUIREMNETS

2.1 Not Used

PART 3 – SPECIFICATIONS

3.1 Not Used

PART 4 – DRAWINGS

4.1 Sheet 2 – Index and General Notes

A. Reissue attached sheet.

4.2 Sheets 4-7, 15-16, 21, 23, 25, 26-27, 38-41

A. Revised sheets have modified the work on the south leg of the intersection to shorten the amount of work on Centennial Road. The south leg will now end construction approximately 175 ft. south of SR 32. Any potential connection to future 175th Street will be performed in other projects.

PART 5 – QUESTIONS AND ANSWERS

5.1 Not Used

END ADDENDUM NO. 23

A&F ENGINEERING
Transportation & Site Engineering
Creating Order Since 1966

Quantities - SR 32 & Centennial

Item No.	Description	Unit	Quantity
1	MOBILIZATION AND DEMOBILIZATION	LS	1.0
2	CONSTRUCTION ENGINEERING	LS	1.0
3	CLEARING OF RIGHT OF WAY	LS	1.0
4	EXCAVATION, COMMON	CYS	2,519.0
5	BORROW	CYS	2,917.1
6	PIPE, REMOVE	LFT	70.0
7	MONUMENT, RE-ESTABLISH	EACH	1.0
8	MAILBOX ASSEMBLY, SINGLE	EA	3.0
9	STORM WATER MANAGEMENT BUDGET	DOL	10,564.3
10	STORMWATER MANAGEMENT IMPLEMENTATION	LS	1.0
11	SWQCP PREPARATION	LS	1.0
12	SUBGRADE TREATMENT, TYPE IBL	SYS	107.6
13	SUBGRADE TREATMENT, TYPE IC	SYS	6,493.9
14	SUBGRADE TREATMENT, TYPE II	SYS	459.3
15	COMPACTED AGGREGATE, NO. 53	CYS	188.0
16	GEOGRID, TYPE IB	SYS	107.6
17	14 IN. STABILIZED SUBGRADE	SYS	518.4
18	7.75 IN. DECORATIVE CONCRETE PAVEMENT	CYS	518.4
19	HMA SURFACE, TYPE B, 9.5 mm	TON	536.0
20	HMA INTERMEDIATE, TYPE B, 19.0 mm	TON	893.0
21	HMA BASE, TYPE B, 25.0 mm	TON	2,858.0
22	ASPHALT FOR TACK COAT	TON	4.9
23	HMA SURFACE, TYPE B, 12.5 MM	TON	18.0
24	CURB AND GUTTER, CONCRETE	LFT	1,377.0
25	CONCRETE CURB	LFT	1,600.0
26	CONCRETE CENTER CURB, TYPE D	SYS	10.7
27	CURB AND GUTTER, ROLLED CURB	LFT	371.0
28	CURB AND GUTTER, TURNOUT COMBINED	LFT	21.0
29	SODDING, NURSERY	SYS	2,754.8
30	PCCP FOR APPROACHES, 6 IN.	SYS	459.3
31	PIPE, TYPE 2, CIRCULAR, 24 IN.	LFT	76.0
32	PIPE END SECTION, DIAMETER 24 IN.	EACH	1.0
33	PIPE, TYPE 2, CIRCULAR, 12 IN.	LFT	118.0
34	PIPE END SECTION, DIAMETER 12 IN.	EACH	3.0
35	PIPE, TYPE 2, CIRCULAR, 15 IN.	LFT	120.0
36	PIPE END SECTION, DIAMETER 15 IN.	EACH	4.0
37	PIPE CATCH BASIN, 12 IN.	EACH	1.0
38	STRUCTURE BACKFILL, TYPE 1	CYS	81.5
39	GEOTEXTILE FOR PIPE	SYS	130.8
40	MAINTAINING TRAFFIC	LS	1.0
41	CONSTRUCTION SIGN, TYPE A	EACH	12.0
42	BARRICADE, TYPE III	LFT	72.0
43	ROAD CLOSURE SIGN ASSEMBLY	EACH	3.0
44	DETOUR ROUTE MARKER ASSEMBLY	EACH	108.0
45	SIGN, SHEET, WITH LEGEND, 0.100 IN. THICKNESS	SFT	84.0
46	SIGN, SHEET, WITH LEGEND, 0.080 IN. THICKNESS	SFT	84.3
47	POST, SQUARE, TYPE 2, REINFORCED ANCHOR BASE	LFT	258.5
48	LINE, MULTI-COMPONENT, SOLID, WHITE, 6 IN.	LFT	1,797.6
49	LINE, MULTI-COMPONENT, SOLID, YELLOW, 6 IN.	LFT	2,907.0
50	LINE, MULTI-COMPONENT, DOTTED, WHITE, 10 IN.	LFT	35.2
51	LINE, MULTI-COMPONENT, BROKEN, WHITE, 6 IN.	LFT	25.3
52	PAVEMENT MESSAGE MARKING, THERMOPLASTIC, LANE INDICATION ARROW	EACH	2.0
53	TRANSVERSE MARKING, THERMOPLASTIC, YIELD LINE, 24 IN.	LFT	69.5
54	GROOVING FOR PAVEMENT MARKINGS	LFT	4,729.8
55	MILLED HMA CORRUGATIONS, CONVENTIONAL	LFT	2,907.0
56	LUMINAIRE, ORNAMENTAL	EACH	12.0
57	LIGHT POLE, ORNAMENTAL	EACH	12.0
58	LIGHTING FOUNDATION, CONCRETE, WITH GROUNDING, 24 IN X 24 IN X 96 IN	EACH	12.0
59	HANDHOLE, LIGHTING	EACH	3.0
60	SERVICE POINT, TYPE I	EACH	1.0

Item No.	Description	Unit	Quantity
61	WIRE, NO. 4 COPPER IN PLASTIC DUCT, IN TRENCH, 4 1/C	LFT	839.8
62	CONDUIT, STEEL, GALVANIZED, 2 IN	LFT	183.5
63	CABLE, POLE CIRCUIT THWN, NO. 10 COPPER, STRANDED 1/C COPPER	LFT	1,152.0
64	CONNECTOR KIT, UNFUSED	EACH	12.0
65	CONNECTOR KIT, FUSED	EACH	12.0
66	MULTIPLE COMPRESSION FITTING, NON-WATERPROOFED	EACH	31.0
67	INSULATION LINK, NON-WATERPROOFED	EACH	44.0

UTILITIES

UTILITY	OWNER	ADDRESS
Gas	Citizen's Energy Group	Rich Miller 317-927-4684 rmiller@citizensenergygroup.com 2150 Dr. Martin Luther King Jr. Street Indianapolis, IN 46202
Sanitary	Citizen's Energy Group	David Clark 317-429-3993 dclark@citizensenergygroup.com 2150 Dr. Martin Luther King Jr. Street Indianapolis, IN 46202
Water	Citizen's Energy Group	Scott Ritter 317-927-4434 sritter@citizensenergygroup.com 2150 Dr. Martin Luther King Jr. Street Indianapolis, IN 46202
Electric	Duke Energy Group	Frank Hancock 765-524-7945 frank.hancock@duke-energy.com 4535 Jane Blvd New Castle, IN 47362
Communications	Comcast	BSM Groups LLC 812-271-2400 comcastrelocate@bsmgroups.com 1600 West Fountain Dr Bloomington, IN 47404
	Crown Castle Fiber	Craig Brown 317-819-8648 craig.brown@crowncastle.com 800 Oliver Ave. Suite 1 Indianapolis, IN 46225
	Duke Fiber	Charlotte Seegrist 513-287-1105 DukeFIberMW@Duke-Energy.com 139 E. 4th Street Cincinatti, OH 45202
	Frontier Communication	Dan Koch 260-415-9328 daniel.koch@ftr.com 4027 Beckwith Drive Fort Wayne, IN 46808
	Metronet	Doug Reckart 317-809-8067 doug.reckart@metronet.com 8036 Cole Wood Blvd. Indianapolis, IN 46239
	Spectrum Communications	Byron Posey 317-538-2016 byron.posey@charter.com 3030 Roosevelt Ave Indianapolis, IN 46218
	Verizon/MCI	Rolland Craig 317-498-1242 dennis.craig@verizon.com 6835 Hillsdale Ct. Indianapolis, IN 46250
	Zayo Group	Waylon Higgins 765-341-1199 waylon.higgins@zayo.com 9209 Castlegate Dr Indianapolis, IN 46256

GENERAL NOTES

**	All Earth Shoulders, median areas, and cut and fill slopes shall be plain or mulched seeded except where sodding is specified.
**	Clearing and removal of woody vegetation will be kept to a minimum between construction limits and right-of-way.
**	Tack Coat shall be placed on new and existing bituminous before a new lift of bituminous is added.

** Represents General Notes required.

REVISIONS

SHEET NO.	DATE	REVISED
24	09-10-2026	Lighting Pole and Service Point Details Added
4-7, 15-16, 21, 23, 25-27, 38-40	09-17-2026	Adjusted South Leg to shorten project.

R/W INDEX

SHEET NO.	DESIGNATION

Know what's below. 811 before you dig.

INDEX

SHEET NO.	SHEET DESIGNATION
1	Title
2	Index and General Notes
3-4	Typical Sections
5	Plat No. 1
6	Geometric Tie-Up Sheet
7	Traffic Maintenance Details
8-10	Detour Route Details
11- 20	Plan and Profile
21-22	Spot Elevation Details
23	Erosion Control Details
24	Lighting
25	Pavement Markings and Sign Details
26	Sheet Sign Table
27	Pavement Markings Table
28	Structure Data Table
29- 47	Cross Sections

VERIFICATION NOTE

Contractor shall verify all dimensions and clearances and all existing filed conditions before starting construction. Commencement of work constitutes acceptance of conditions.

Should different conditions be encountered, contact the engineer or designer before proceeding with work.

A&F ENGINEERING
Transportation & Site Engineering
Creating Order Since 1966
8365 Keystone Crossing, Suite 201, Indianapolis, IN. 46240 (317) 202-0864

JEFFREY A. HILL REGISTERED No. 10100431 STATE OF INDIANA PROFESSIONAL ENGINEER

RECOMMENDED FOR APPROVAL — DESIGN ENGINEER — 09/01/2026 DATE

DESIGNED: MCN | DRAWN: MCN

CHECKED: JAH | CHECKED: JAH

INDIANA DEPARTMENT OF TRANSPORTATION

INDEX AND GENERAL NOTES

HORIZONTAL SCALE	BRIDGE FILE
N/A	N/A
VERTICAL SCALE	DESIGNATION
N/A	--

SHEETS 2 of 47

CONTRACT --

Z:\2024\24078T-CONTEXT DESIGN, TRAFFIC SIGNAL, SR 32-CENTENNIAL RD PHS 1\DWG\RAB\24078P-TTL.DWG

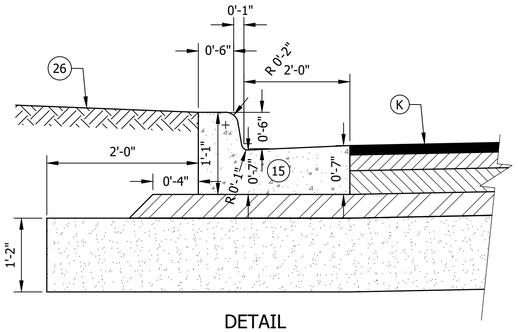

DETAIL
COMBINED CONCRETE CURB & GUTTER
NOT TO SCALE

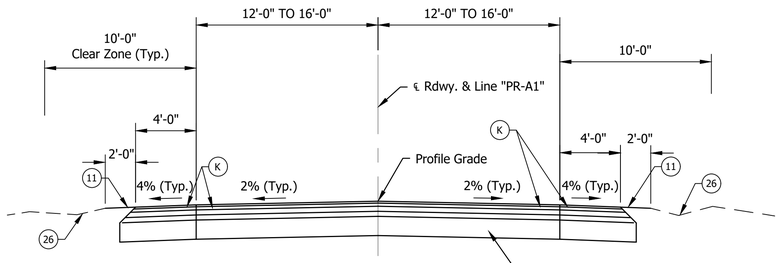

TYPICAL SECTION
Sta. 51+50.00 to Sta. 54+16.61 "PR-W"
Sta. 72+21.09 to Sta. 76+00.00 "PR-E""
Sta. 13+27.04 to Sta. 15+00.00 "PR-N"

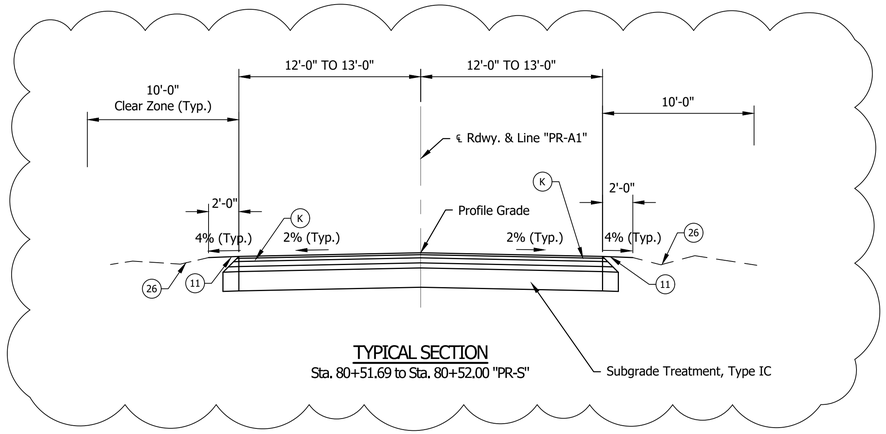

TYPICAL SECTION
Sta. 80+51.69 to Sta. 80+52.00 "PR-S"

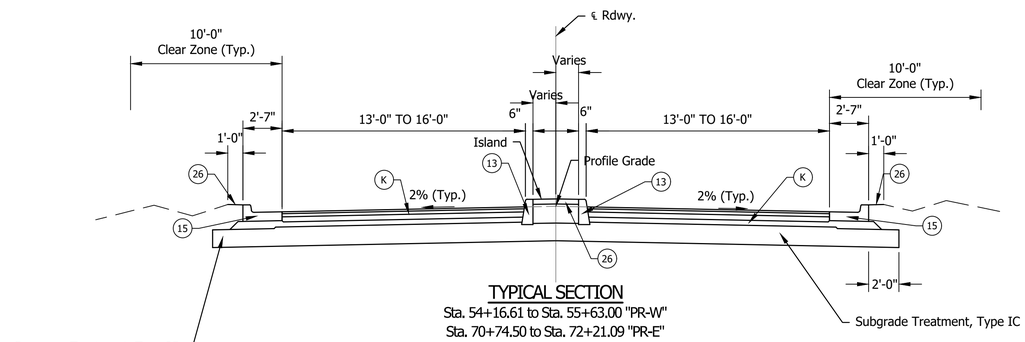

TYPICAL SECTION
Sta. 54+16.61 to Sta. 55+63.00 "PR-W"
Sta. 70+74.50 to Sta. 72+21.09 "PR-E"
Sta. 80+52.00 to Sta. 81+78.00 "PR-S"
Sta. 11+31.40 to Sta. 13+27.04 "PR-N"

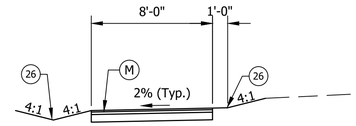

TYPICAL SECTION
MULTI-USE PATH
Sta. 70+74.50 to Sta. 76+00.00 "PR-E""
Sta. 11+00.00 to Sta. 15+00.00 "PR-N"

LEGEND

- (C) 7.75 in. Decorative Concrete Pavement on 5.5 in. Compacted Aggregate Base, No. 53 on 14 in. Stabalized Subgrade
- (C1) PCCP for Approaches, 6 in. on Subgrade Treatment, Type II
- (K) Full Depth HMA Pavement: 1.5" HMA Surface, Type B, 9.5mm on 2.5" HMA Intermediate, Type B, 19.0mm on 4.0" HMA Base, Type B, 25.0mm on 4.0" HMA Base, Type B, 25.0mm on Subgrade Treatment, Type IC
- (M) Multi-Use Path: 330 lb/syd HMA Surface, Type B, 12.5mm on 6 in. Compacted Aggregate, No. 53, Base on Geogrid, IB Subgrade Treatment, Type IBL
- (11) Stone Shoulder
- (13) Concrete Curb
- (15) Combined Concrete Curb and Gutter
- (16) Roll Curb
- (22) Concrete Center Curb, Type D
- (26) Sodding, Nursery

REVISIONS	
	ITEM
09-17-2026	Adjusted South Leg to shorten project.

A&F ENGINEERING
Transportation & Site Engineering
Creating Order Since 1966
8365 Keystone Crossing, Suite 201, Indianapolis, IN. 46240 (317) 202-0864

JEFFREY A. HILL REGISTERED No. 10100431 STATE OF INDIANA PROFESSIONAL ENGINEER

RECOMMENDED FOR APPROVAL — DESIGN ENGINEER — 09/01/2026 DATE

DESIGNED: MCN DRAWN: MCN
CHECKED: JAH CHECKED: JAH

INDIANA
DEPARTMENT OF TRANSPORTATION

TYPICAL SECTIONS

HORIZONTAL SCALE	BRIDGE FILE
1"=5'	N/A
VERTICAL SCALE	DESIGNATION
N/A	--

SHEETS	
4	of 47
CONTRACT	
--	

Z:\2024\24078T-CONTEXT DESIGN, TRAFFIC SIGNAL, SR 32-CENTENNIAL RD PHS 1\DWG\RAB\24078P-TYP.DWG

ORIGIN BENCHMARK:

REFERENCE: A COAST AND GEODETIC SURVEY (CGS) BENCH MARK DISK STAMPED: "D-112' 1946- SET FLUSH IN TOP OF A CONCRETE POST, IN THE NORTHWEST QUARTER OF THE INTERSECTION OF STATE ROAD 32 AND CENTENNIAL ROAD.

ELEV.: 918.81 FEET (NAVD 88)

PROJECT BENCHMARK#1
MAG SPIKE IN PWP, LOCATED 1108 FEET WEST OF THE WEST EDGE OF THE S.R. 32 BRIDGE DECK OVER EAGLE CREEK ON THE WEST SIDE OF EAGLETOWN THEN 21.4 FEET SOUTH OF THE CENTER OF SAID STATE ROAD, ON THE NORTHERLY SIDE OF SAID PWP.

ELEV=897.717 LVL (NAVD 88)

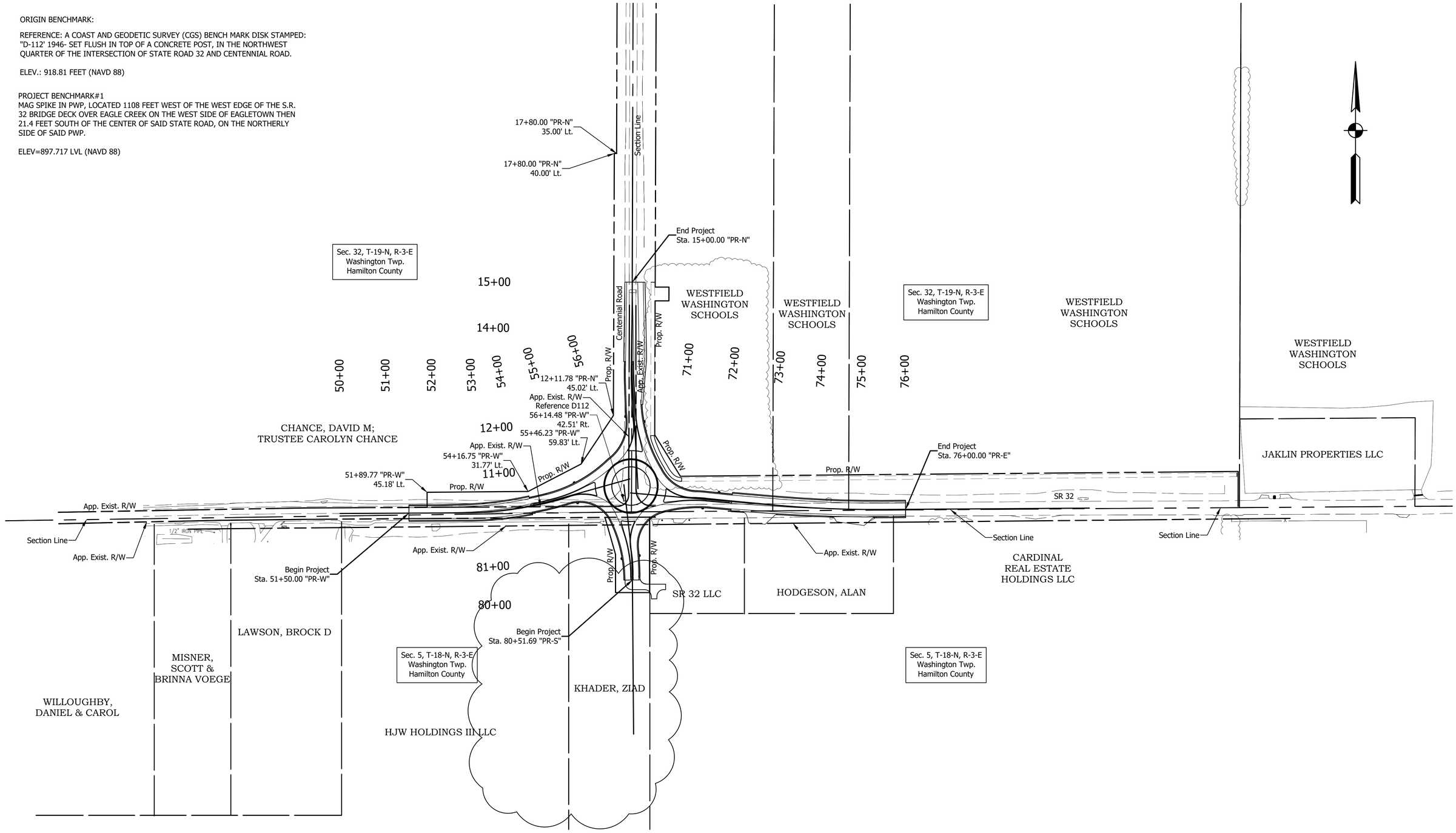

REVISIONS	
	ITEM
09-17-2026	Adjusted South Leg to shorten project.

A&F ENGINEERING
Transportation & Site Engineering
Creating Order Since 1966
8365 Keystone Crossing, Suite 201, Indianapolis, IN. 46240 (317) 202-0864

JEFFREY A. HILL
REGISTERED
No. 10100431
STATE OF INDIANA
PROFESSIONAL ENGINEER

RECOMMENDED FOR APPROVAL — DESIGN ENGINEER — 09/01/2026 DATE

DESIGNED: MCN	DRAWN: MCN
CHECKED: JAH	CHECKED: JAH

INDIANA
DEPARTMENT OF TRANSPORTATION

PLAT NO. 1

HORIZONTAL SCALE	BRIDGE FILE
1" = 100'	N/A
VERTICAL SCALE	DESIGNATION
N/A	--
SURVEY BOOK	SHEETS
	5 of 47
CONTRACT	PROJECT
--	CONTRACT #

Z:\2024\240787-CONTEXT DESIGN, TRAFFIC SIGNAL, SR 32-CENTENNIAL RD PHS 1\DWG\RAB\240787-RAB-PLAT01.DWG

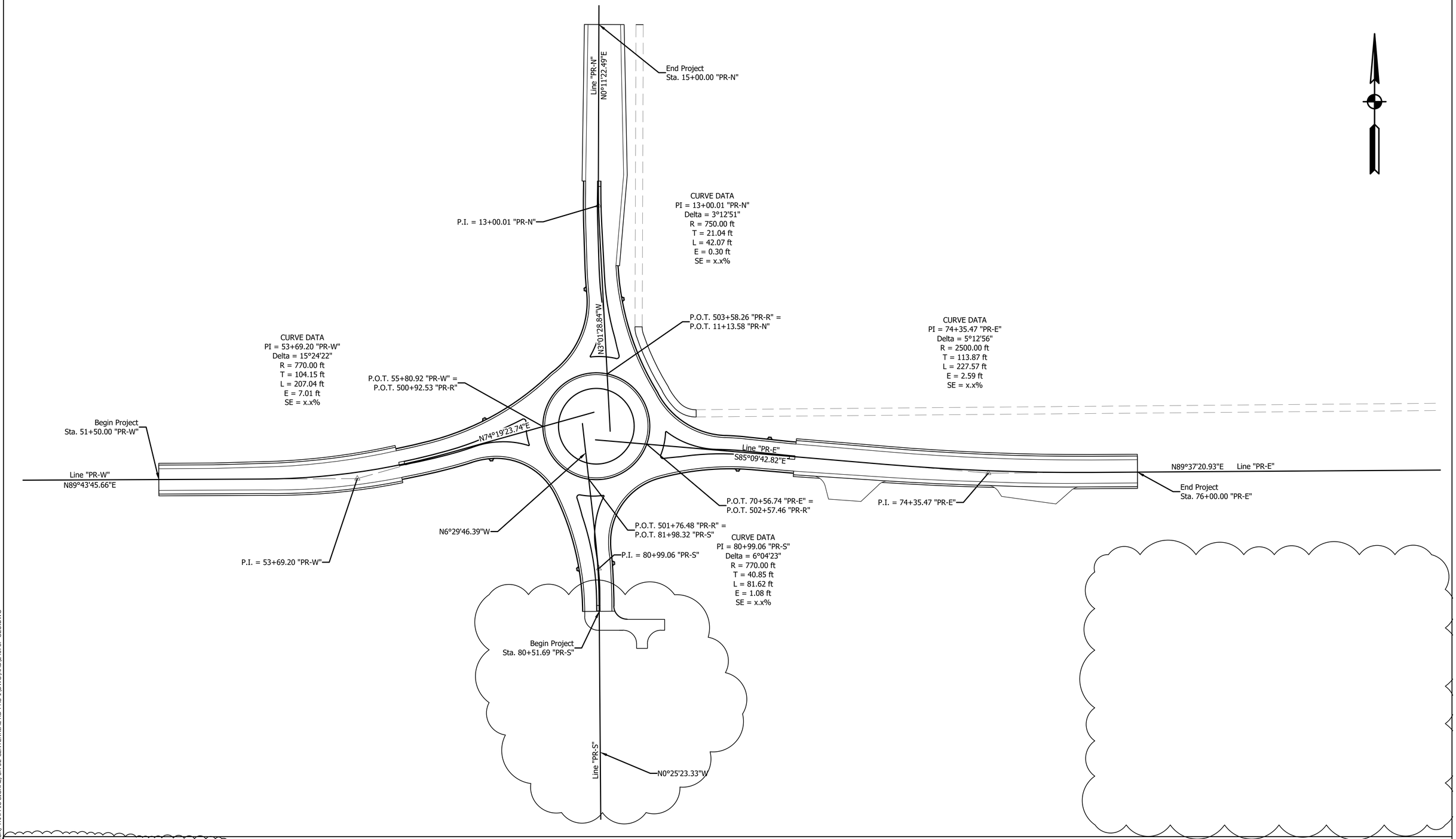

Z:\2024\240787-CONTEXT DESIGN, TRAFFIC SIGNAL, SR 32-CENTENNIAL RD PHS 1\DWG\RAB\240789-GEO.DWG

REVISIONS	
ITEM	
09-17-2026	Adjusted South Leg to shorten project.

A&F ENGINEERING
Transportation & Site Engineering
Creating Order Since 1966
8365 Keystone Crossing, Suite 201, Indianapolis, IN. 46240 (317) 202-0864

JEFFREY A. HILL
REGISTERED
No. 10100431
STATE OF INDIANA
PROFESSIONAL ENGINEER

RECOMMENDED FOR APPROVAL — DESIGN ENGINEER — 09/01/2026 DATE

DESIGNED: MCN | DRAWN: MCN
CHECKED: JAH | CHECKED: JAH

INDIANA
DEPARTMENT OF TRANSPORTATION

GEOMETRIC TIE-UP

HORIZONTAL SCALE	BRIDGE FILE
1"=50'	N/A
VERTICAL SCALE	DESIGNATION
N/A	--
	SHEETS
	6 of 47
	CONTRACT
	--

Maintenance of Traffic:

Construction of the intersection of SR 32 and Centennial as shown. Traffic shall be detoured as shown. Access to all residences and businesses within the construction limits shall be maintained at all times.

LEGEND

- (B) "ROAD CLOSED AHEAD" SIGN, XW20-3
- (C) "ROAD CLOSED 1000 FT" SIGN, XW20-3
- (D) "ROAD CLOSED 500 FT" Sign, XW20-3
- (Y) Road Closure Sign Assembly, R11-2
- Construction Sign With Flashing Warning Light
- Construction Sign
- Barricade Type III
- Construction Area

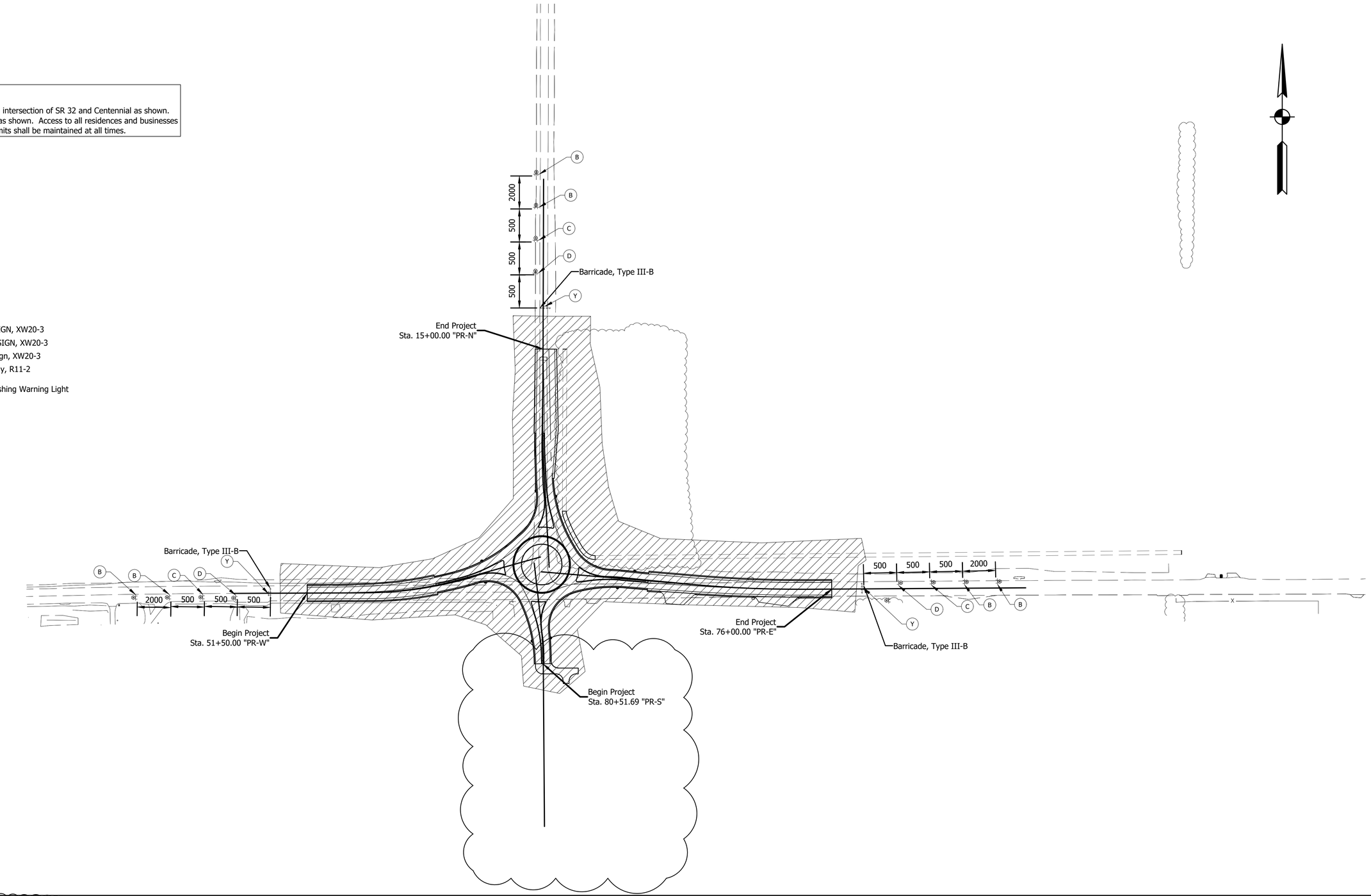

REVISIONS	
	ITEM
09-17-2026	Adjusted South Leg to shorten project.

A&F ENGINEERING
Transportation & Site Engineering
Creating Order Since 1966
8365 Keystone Crossing, Suite 201, Indianapolis, IN. 46240 (317) 202-0864

JEFFREY A. HILL REGISTERED No. 10100431 STATE OF INDIANA PROFESSIONAL ENGINEER

RECOMMENDED FOR APPROVAL — DESIGN ENGINEER — 09/01/2026 DATE

DESIGNED: MCN | DRAWN: MCN

CHECKED: JAH | CHECKED: JAH

INDIANA
DEPARTMENT OF TRANSPORTATION

MAINTENANCE OF TRAFFIC

HORIZONTAL SCALE	BRIDGE FILE
1:100_XREF	N/A
VERTICAL SCALE	DESIGNATION
N/A	--
SURVEY BOOK	SHEETS
	7 of 47
CONTRACT	PROJECT
--	

Z:\2024\24078T-CONTEXT DESIGN, TRAFFIC SIGNAL, SR 32-CENTENNIAL RD PHS 1\DWG\RAB\24078T-MOT.DWG

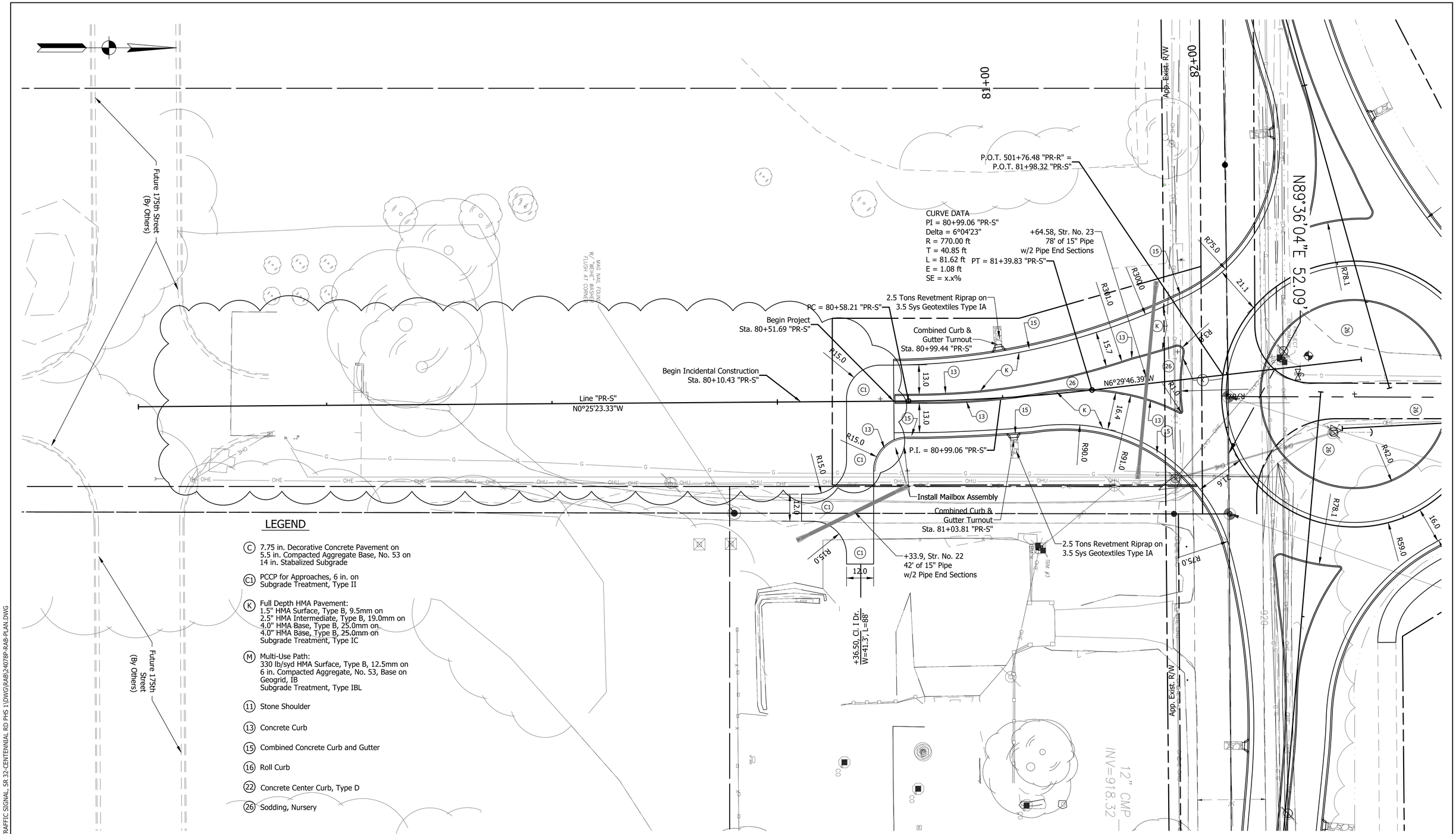

LEGEND

- (C) 7.75 in. Decorative Concrete Pavement on 5.5 in. Compacted Aggregate Base, No. 53 on 14 in. Stabalized Subgrade
- (C1) PCCP for Approaches, 6 in. on Subgrade Treatment, Type II
- (K) Full Depth HMA Pavement: 1.5" HMA Surface, Type B, 9.5mm on 2.5" HMA Intermediate, Type B, 19.0mm on 4.0" HMA Base, Type B, 25.0mm on 4.0" HMA Base, Type B, 25.0mm on Subgrade Treatment, Type IC
- (M) Multi-Use Path: 330 lb/syd HMA Surface, Type B, 12.5mm on 6 in. Compacted Aggregate, No. 53, Base on Geogrid, IB Subgrade Treatment, Type IBL
- (11) Stone Shoulder
- (13) Concrete Curb
- (15) Combined Concrete Curb and Gutter
- (16) Roll Curb
- (22) Concrete Center Curb, Type D
- (26) Sodding, Nursery

REVISIONS	
	ITEM
09-17-2026	Adjusted South Leg to shorten project.

A&F ENGINEERING
Transportation & Site Engineering
Creating Order Since 1966
8365 Keystone Crossing, Suite 201, Indianapolis, IN. 46240 (317) 202-0864

JEFFREY A. HILL
REGISTERED
No. 10100431
STATE OF INDIANA
PROFESSIONAL ENGINEER

RECOMMENDED FOR APPROVAL	DESIGN ENGINEER	09/01/2026	DATE
DESIGNED:	MCN	DRAWN:	MCN
CHECKED:	JAH	CHECKED:	JAH

INDIANA
DEPARTMENT OF TRANSPORTATION

PLAN - LINE "PR-S"
STA. 77+00.00 TO STA. 83+00.00

HORIZONTAL SCALE	BRIDGE FILE
1" = 20'	N/A
VERTICAL SCALE	DESIGNATION
N/A	--
	SHEETS
	15 of 47
	CONTRACT
	--

Z:\2024\24078T-CONTEXT DESIGN, TRAFFIC SIGNAL, SR 32-CENTENNIAL RD PHS 1\DWG\RAB\24078P-RAB-PLAN.DWG

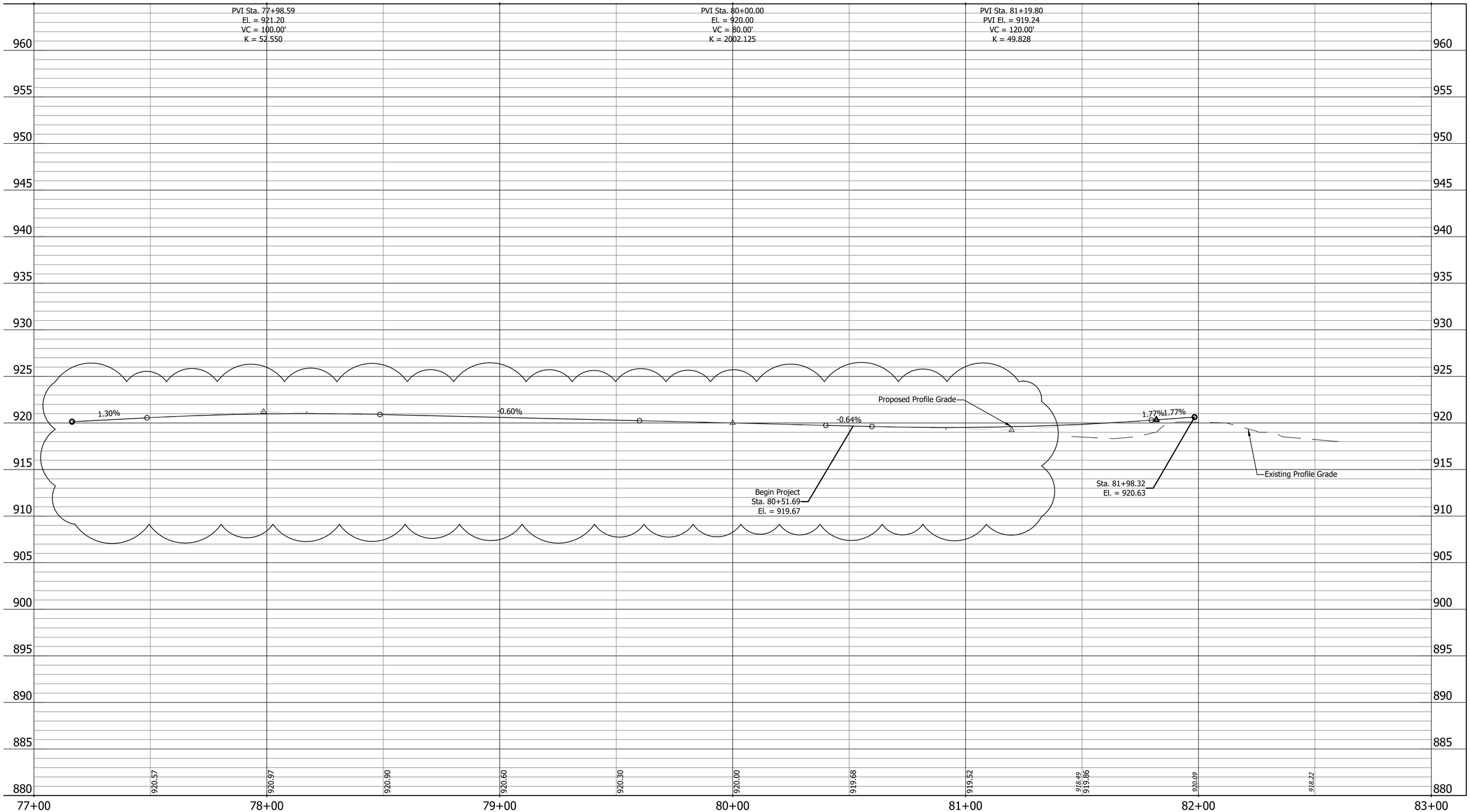

Z:\2024\24078T-CONTEXT DESIGN, TRAFFIC SIGNAL, SR 32-CENTENNIAL RD PHS 1\DWG\RAB\24078P-PROF.DWG

REVISIONS	
ITEM	
09-17-2026	Adjusted South Leg to shorten project.

A&F ENGINEERING
Transportation & Site Engineering
Creating Order Since 1966
8365 Keystone Crossing, Suite 201, Indianapolis, IN. 46240 (317) 202-0864

JEFFREY A. HILL
REGISTERED
No. 10100431
STATE OF INDIANA
PROFESSIONAL ENGINEER

RECOMMENDED FOR APPROVAL — DESIGN ENGINEER — 09/01/2026 DATE

DESIGNED: MCN	DRAWN: MCN
CHECKED: JAH	CHECKED: JAH

INDIANA
DEPARTMENT OF TRANSPORTATION

PROFILE - LINE "PR-S"
STA. 77+00.00 TO STA. 83+00.00

HORIZONTAL SCALE	BRIDGE FILE
1" = 20'	N/A
VERTICAL SCALE	DESIGNATION
N/A	--
	SHEETS
	16 of 47
	CONTRACT
	--

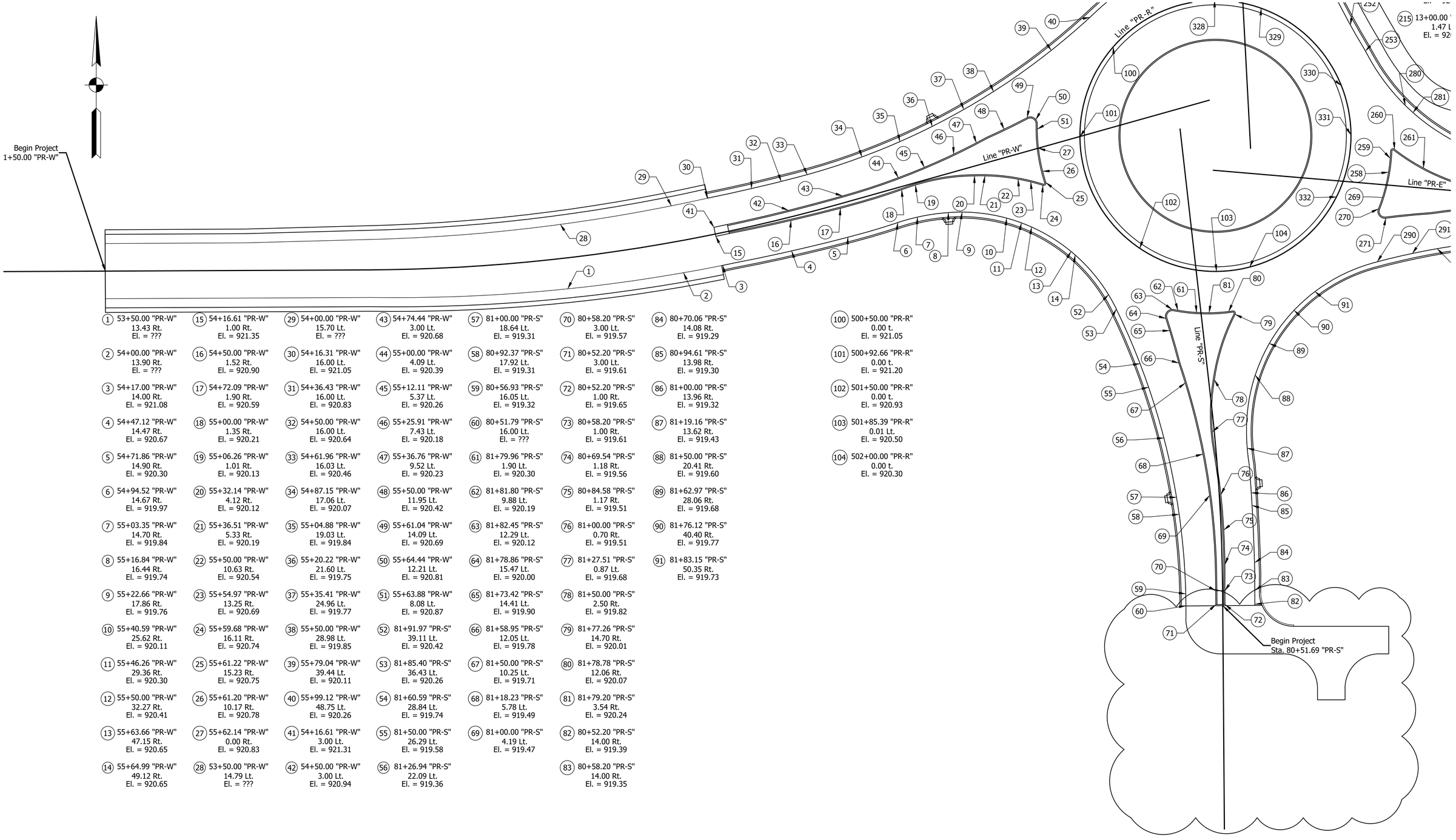

1 53+50.00 "PR-W" 13.43 Rt. El. = ???
2 54+00.00 "PR-W" 13.90 Rt. El. = ???
3 54+17.00 "PR-W" 14.00 Rt. El. = 921.08
4 54+47.12 "PR-W" 14.47 Rt. El. = 920.67
5 54+71.86 "PR-W" 14.90 Rt. El. = 920.30
6 54+94.52 "PR-W" 14.67 Rt. El. = 919.97
7 55+03.35 "PR-W" 14.70 Rt. El. = 919.84
8 55+16.84 "PR-W" 16.44 Rt. El. = 919.74
9 55+22.66 "PR-W" 17.86 Rt. El. = 919.76
10 55+40.59 "PR-W" 25.62 Rt. El. = 920.11
11 55+46.26 "PR-W" 29.36 Rt. El. = 920.30
12 55+50.00 "PR-W" 32.27 Rt. El. = 920.41
13 55+63.66 "PR-W" 47.15 Rt. El. = 920.65
14 55+64.99 "PR-W" 49.12 Rt. El. = 920.65
15 54+16.61 "PR-W" 1.00 Rt. El. = 921.35
16 54+50.00 "PR-W" 1.52 Rt. El. = 920.90
17 54+72.09 "PR-W" 1.90 Rt. El. = 920.59
18 55+00.00 "PR-W" 1.35 Rt. El. = 920.21
19 55+06.26 "PR-W" 1.01 Rt. El. = 920.13
20 55+32.14 "PR-W" 4.12 Rt. El. = 920.12
21 55+36.51 "PR-W" 5.33 Rt. El. = 920.19
22 55+50.00 "PR-W" 10.63 Rt. El. = 920.54
23 55+54.97 "PR-W" 13.25 Rt. El. = 920.69
24 55+59.68 "PR-W" 16.11 Rt. El. = 920.74
25 55+61.22 "PR-W" 15.23 Rt. El. = 920.75
26 55+61.20 "PR-W" 10.17 Rt. El. = 920.78
27 55+62.14 "PR-W" 0.00 Rt. El. = 920.83
28 53+50.00 "PR-W" 14.79 Lt. El. = ???
29 54+00.00 "PR-W" 15.70 Lt. El. = ???
30 54+16.31 "PR-W" 16.00 Lt. El. = 921.05
31 54+36.43 "PR-W" 16.00 Lt. El. = 920.83
32 54+50.00 "PR-W" 16.00 Lt. El. = 920.64
33 54+61.96 "PR-W" 16.03 Lt. El. = 920.46
34 54+87.15 "PR-W" 17.06 Lt. El. = 920.07
35 55+04.88 "PR-W" 19.03 Lt. El. = 919.84
36 55+20.22 "PR-W" 21.60 Lt. El. = 919.75
37 55+35.41 "PR-W" 24.96 Lt. El. = 919.77
38 55+50.00 "PR-W" 28.98 Lt. El. = 919.85
39 55+79.04 "PR-W" 39.44 Lt. El. = 920.11
40 55+99.12 "PR-W" 48.75 Lt. El. = 920.26
41 54+16.61 "PR-W" 3.00 Lt. El. = 921.31
42 54+50.00 "PR-W" 3.00 Lt. El. = 920.94
43 54+74.44 "PR-W" 3.00 Lt. El. = 920.68
44 55+00.00 "PR-W" 4.09 Lt. El. = 920.39
45 55+12.11 "PR-W" 5.37 Lt. El. = 920.26
46 55+25.91 "PR-W" 7.43 Lt. El. = 920.18
47 55+36.76 "PR-W" 9.52 Lt. El. = 920.23
48 55+50.00 "PR-W" 11.95 Lt. El. = 920.42
49 55+61.04 "PR-W" 14.09 Lt. El. = 920.69
50 55+64.44 "PR-W" 12.21 Lt. El. = 920.81
51 55+63.88 "PR-W" 8.08 Lt. El. = 920.87
52 81+91.97 "PR-S" 39.11 Lt. El. = 920.42
53 81+85.40 "PR-S" 36.43 Lt. El. = 920.26
54 81+60.59 "PR-S" 28.84 Lt. El. = 919.74
55 81+50.00 "PR-S" 26.29 Lt. El. = 919.58
56 81+26.94 "PR-S" 22.09 Lt. El. = 919.36
57 81+00.00 "PR-S" 18.64 Lt. El. = 919.31
58 80+92.37 "PR-S" 17.92 Lt. El. = 919.31
59 80+56.93 "PR-S" 16.05 Lt. El. = 919.32
60 80+51.79 "PR-S" 16.00 Lt. El. = ???
61 81+79.96 "PR-S" 1.90 Lt. El. = 920.30
62 81+81.80 "PR-S" 9.88 Lt. El. = 920.19
63 81+82.45 "PR-S" 12.29 Lt. El. = 920.12
64 81+78.86 "PR-S" 15.47 Lt. El. = 920.00
65 81+73.42 "PR-S" 14.41 Lt. El. = 919.90
66 81+58.95 "PR-S" 12.05 Lt. El. = 919.78
67 81+50.00 "PR-S" 10.25 Lt. El. = 919.71
68 81+18.23 "PR-S" 5.78 Lt. El. = 919.49
69 81+00.00 "PR-S" 4.19 Lt. El. = 919.47
70 80+58.20 "PR-S" 3.00 Lt. El. = 919.57
71 80+52.20 "PR-S" 3.00 Lt. El. = 919.61
72 80+52.20 "PR-S" 1.00 Rt. El. = 919.65
73 80+58.20 "PR-S" 1.00 Rt. El. = 919.61
74 80+69.54 "PR-S" 1.18 Rt. El. = 919.56
75 80+84.58 "PR-S" 1.17 Rt. El. = 919.51
76 81+00.00 "PR-S" 0.70 Rt. El. = 919.51
77 81+27.51 "PR-S" 0.87 Lt. El. = 919.68
78 81+50.00 "PR-S" 2.50 Rt. El. = 919.82
79 81+77.26 "PR-S" 14.70 Rt. El. = 920.01
80 81+78.78 "PR-S" 12.06 Rt. El. = 920.07
81 81+79.20 "PR-S" 3.54 Rt. El. = 920.24
82 80+52.20 "PR-S" 14.00 Rt. El. = 919.39
83 80+58.20 "PR-S" 14.00 Rt. El. = 919.35
84 80+70.06 "PR-S" 14.08 Rt. El. = 919.29
85 80+94.61 "PR-S" 13.98 Rt. El. = 919.30
86 81+00.00 "PR-S" 13.96 Rt. El. = 919.32
87 81+19.16 "PR-S" 13.62 Rt. El. = 919.43
88 81+50.00 "PR-S" 20.41 Rt. El. = 919.60
89 81+62.97 "PR-S" 28.06 Rt. El. = 919.68
90 81+76.12 "PR-S" 40.40 Rt. El. = 919.77
91 81+83.15 "PR-S" 50.35 Rt. El. = 919.73
100 500+50.00 "PR-R" 0.00 t. El. = 921.05
101 500+92.66 "PR-R" 0.00 t. El. = 921.20
102 501+50.00 "PR-R" 0.00 t. El. = 920.93
103 501+85.39 "PR-R" 0.01 Lt. El. = 920.50
104 502+00.00 "PR-R" 0.00 t. El. = 920.30

REVISIONS	
	ITEM
09-17-2026	Adjusted South Leg to shorten project.

A&F ENGINEERING
Transportation & Site Engineering
Creating Order Since 1966
8365 Keystone Crossing, Suite 201, Indianapolis, IN. 46240 (317) 202-0864

JEFFREY A. HILL REGISTERED No. 10100431 STATE OF INDIANA PROFESSIONAL ENGINEER

RECOMMENDED FOR APPROVAL — DESIGN ENGINEER — 09/01/2026 DATE

DESIGNED: MCN DRAWN: MCN
CHECKED: JAH CHECKED: JAH

INDIANA
DEPARTMENT OF TRANSPORTATION

SPOT ELEVATION DETAILS

HORIZONTAL SCALE	BRIDGE FILE
1" = 20'	N/A
VERTICAL SCALE	DESIGNATION
N/A	--
	SHEETS
	21 of 47
	CONTRACT
	--

Z:\2024\24078T-CONTEXT DESIGN_TRAFFIC SIGNAL_SR 32-CENTENNIAL RD PHS 1\DWG\RAB\24078P-RAB-SPOT ELEVATION.DWG

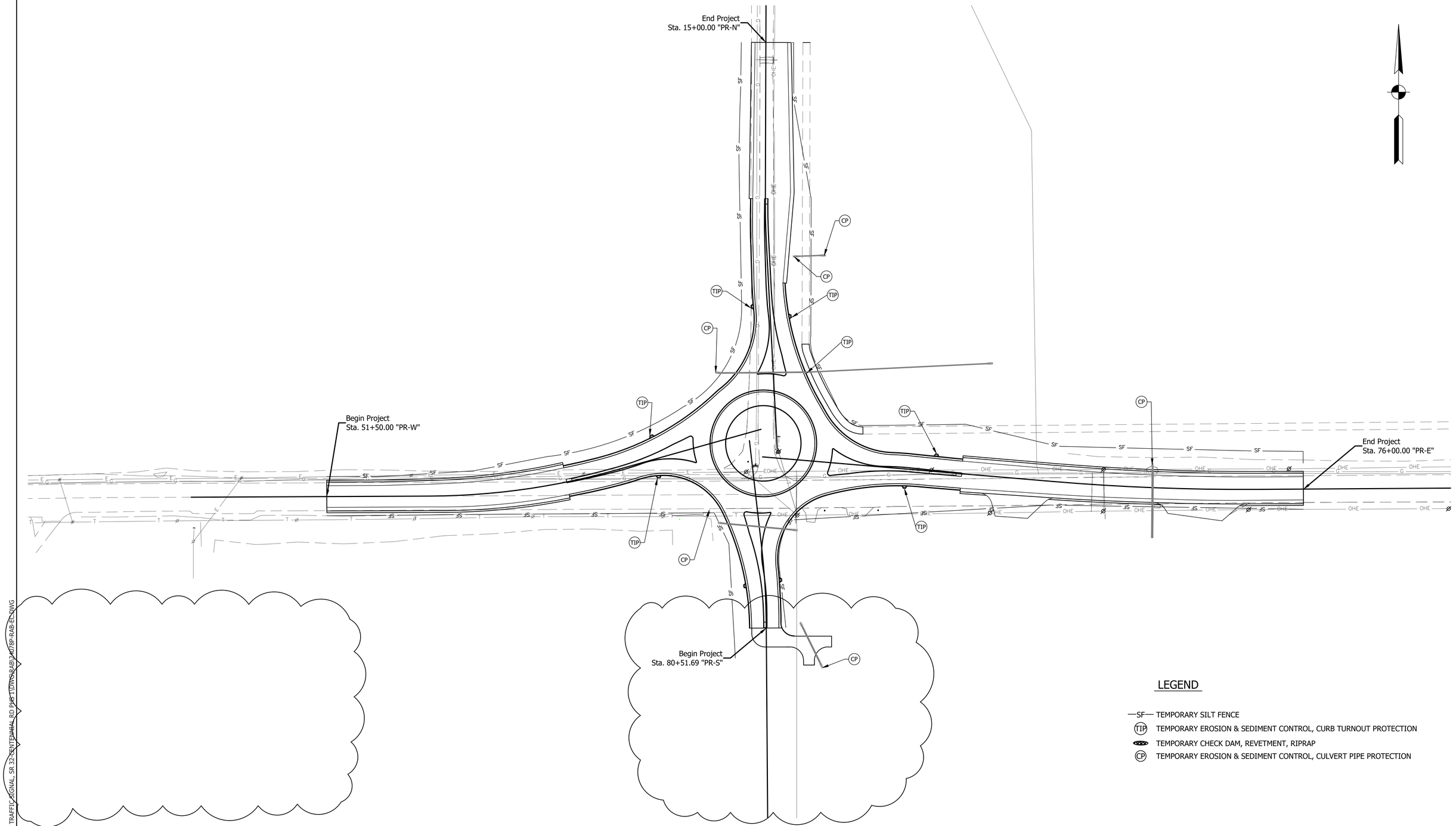

LEGEND

—SF— TEMPORARY SILT FENCE

(TIP) TEMPORARY EROSION & SEDIMENT CONTROL, CURB TURNOUT PROTECTION

TEMPORARY CHECK DAM, REVETMENT, RIPRAP

(CP) TEMPORARY EROSION & SEDIMENT CONTROL, CULVERT PIPE PROTECTION

REVISIONS	
ITEM	
09-17-2026	Adjusted South Leg to shorten project.

A&F ENGINEERING
Transportation & Site Engineering
Creating Order Since 1966
8365 Keystone Crossing, Suite 201, Indianapolis, IN. 46240 (317) 202-0864

JEFFREY A. HILL
REGISTERED
No. 10100431
STATE OF INDIANA
PROFESSIONAL ENGINEER

RECOMMENDED FOR APPROVAL — DESIGN ENGINEER — 09/01/2026 DATE

DESIGNED: MCN | DRAWN: MCN

CHECKED: JAH | CHECKED: JAH

INDIANA
DEPARTMENT OF TRANSPORTATION

EROSION CONTROL

HORIZONTAL SCALE	BRIDGE FILE
1" = 50'	N/A
VERTICAL SCALE	DESIGNATION
N/A	--
	SHEETS
	23 of 47
	CONTRACT
	--

Z:\2024\240787-CONTEXT DESIGN, TRAFFIC SIGNAL, SR 32-SENTENNIAL RD PHS 1\DWGS\RAB\240787P-RAB-EC.DWG

LEGEND

(44) Line, Multi-Component, Dotted, White, 10 IN. (2 FT. Line with 4 FT. Gap)
(46) Line, Multi-Component, Solid, White, 6 IN.
(47) Line, Multi-Component, Solid, Yellow, 6 IN.
(49) Line, Multi-Component, Broken, White, 6 IN. (2 FT. Line with 6 FT. Gap)
Yield Line Triangle, Thermoplastic (See Detail This Sheet)
Pavement Message Marking, Thermoplastic, Lane Indication Arrow
Pavement Message Marking, Thermoplastic, (ONLY)
Sheet Sign

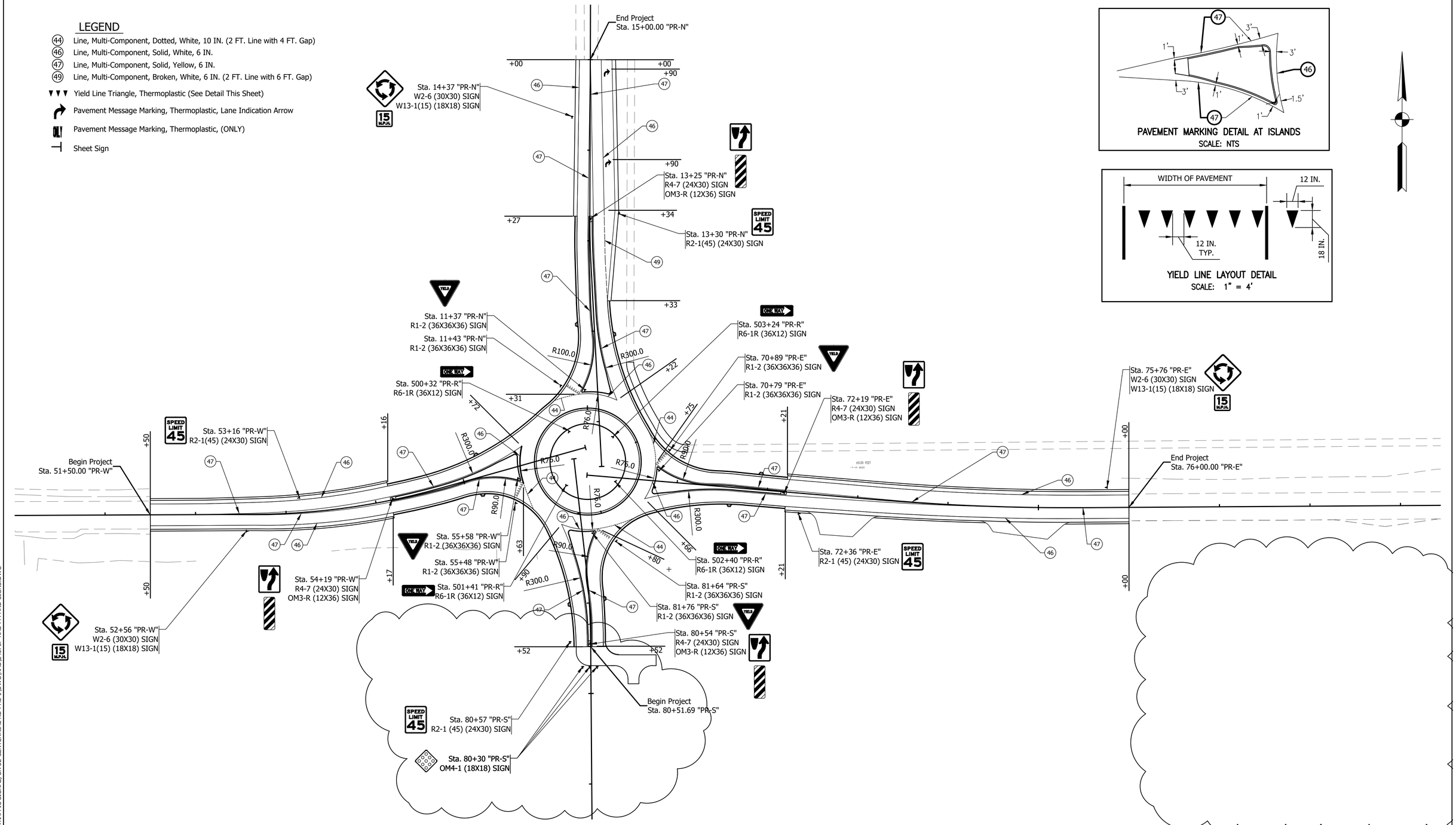

PAVEMENT MARKING DETAIL AT ISLANDS
SCALE: NTS

YIELD LINE LAYOUT DETAIL
SCALE: 1" = 4'

Z:\2024\240787-CONTEXT DESIGN, TRAFFIC SIGNAL, SR 32-CENTENNIAL RD PHS 1\DWG\RAB\240787-RAB-PM AND SIGNS.DWG

REVISIONS	
	ITEM
09-17-2026	Adjusted South Leg to shorten project.

A&F ENGINEERING
Transportation & Site Engineering
Creating Order Since 1966
8365 Keystone Crossing, Suite 201, Indianapolis, IN. 46240 (317) 202-0864

JEFFREY A. HILL
REGISTERED
No. 10100431
STATE OF INDIANA
PROFESSIONAL ENGINEER

RECOMMENDED FOR APPROVAL — DESIGN ENGINEER — 09/01/2026 DATE

DESIGNED: MCN | DRAWN: MCN
CHECKED: JAH | CHECKED: JAH

INDIANA
DEPARTMENT OF TRANSPORTATION

PAVEMENT MARKINGS AND SIGN DETAILS

HORIZONTAL SCALE	BRIDGE FILE
1" = 50'	N/A
VERTICAL SCALE	DESIGNATION
N/A	--

	SHEETS
	25 of 47
	CONTRACT
	--

SHEET SIGN & POST SUMMARY

SIGN								POST									
PLAN SHEET No. /LINE	SIGN LOCATION (STA. or MP)	SIGN CODE	SIGN SIZE IN. X IN.	GROUND - MOUNTED SIGN AREA (ft2)			MOUNTED ON PANEL SIGN, AREA (ft^2)	SQUARE									
								2 1/2" x 2 1/2" - 12 GA. (TYPE 3)			2" x 2" - 12 GA. (TYPE 2)			2 1/4" x 2 1/4" - 12 GA. (TYPE 1)		
								UNREINFORCED ANCHOR			REINFORCED ANCHOR			REINFORCED ANCHOR		
				0.080"	0.100"	0.125"	0.080"	POST LENGTH (FT)			POST LENGTH (FT.)			POST LENGTH (FT)		
								1	2	TOTAL	1	2	TOTAL	1	2	TOTAL
PR-W	52+56	W2-6	30 X 30	6.250							11.0		11.0			
		W13-1(15)	18 X 18	2.250												
	53+16	R2-1(45)	24 X 30	5.000							9.5		9.5			
	54+19	R4-7	24 X 30	5.000							12.5		12.5			
		OM3-R	12 X 36	3.000												
	55+48	R1-2	36 X 36 X 36		9.000						10.0		10.0			
	55+58	R1-2	36 X 36 X 36		9.000						10.0		10.0			
PR-E	70+79	R1-2	36 X 36 X 36		9.000						10.0		10.0			
	70+89	R1-2	36 X 36 X 36		9.000						10.0		10.0			
	72+19	R4-7	24 X 30	5.000							12.5		12.5			
		OM3-R	12 X 36	3.000												
	72+36	R2-1(45)	24 X 30	5.000							9.5		9.5			
	75+76	W2-6	30 X 30	6.250							11.0		11.0			
		W13-1(15)	18 X 18	2.250												
PR-S	80+30	OM4-1	18 X 18	2.250							8.5		8.5			
		OM4-1	18 X 18	2.250							8.5		8.5			
		OM4-1	18 X 18	2.250							8.5		8.5			
	80+54	R4-7	24 X 30	5.000							12.5		12.5			
		OM3-R	12 X 36	3.000												
	80+57	R2-1(45)	24 X 30	5.000							9.5		9.5			
	81+64	R1-2	36 X 36 X 36		9.000						10.0		10.0			
	81+76	R1-2	36 X 36 X 36		9.000						10.0		10.0			
PR-N	11+37	R1-2	36 X 36 X 36		9.000						10.0		10.0			
	11+43	R1-2	36 X 36 X 36		9.000						10.0		10.0			
	13+16	R4-7	24 X 30	5.000							12.5		12.5			
		OM3-R	12 X 36	3.000												
	13+30	R2-1(45)	24 X 30	5.000							9.5		9.5			
	14+37	W2-6	30 X 30	6.250							11.0		11.0			
		W13-1(15)	18 X 18	2.250												
PR-R	500+32	R6-1R	36 X 12		3.000						8.0		8.0			
	501+41	R6-1R	36 X 12		3.000						8.0		8.0			
	502+40	R6-1R	36 X 12		3.000						8.0		8.0			
	503+24	R6-1R	36 X 12		3.000						8.0		8.0			
Totals				84.250	84.000								258.5			

REVISIONS	
	ITEM
09-17-2026	Adjusted South Leg to shorten project.

A&F ENGINEERING
Transportation & Site Engineering
Creating Order Since 1966
8365 Keystone Crossing, Suite 201, Indianapolis, IN. 46240 (317) 202-0864

JEFFREY A. HILL REGISTERED No. 10100431 STATE OF INDIANA PROFESSIONAL ENGINEER

RECOMMENDED FOR APPROVAL — DESIGN ENGINEER — 09/01/2026 DATE

DESIGNED: MCN | DRAWN: MCN

CHECKED: JAH | CHECKED: JAH

INDIANA
DEPARTMENT OF TRANSPORTATION

SHEET SIGN TABLE

HORIZONTAL SCALE	BRIDGE FILE
N/A	N/A
VERTICAL SCALE	DESIGNATION
N/A	--
	SHEETS
	26 of 47
	CONTRACT
	--

Z:\2024\24078T-CONTEXT DESIGN, TRAFFIC SIGNAL, SR 32-CENTENNIAL RD PHS 1\DWG\RAB\24078T-STR DATATABLE.DWG

PAVEMENT MARKINGS SUMMARY OF QUANTITIES

LOCATION	LINE PAINT		LINE MULTI-COMPONENT				LINE EPOXY				TRANSVERSE MARKINGS THERMOPLASTIC YIELD LINE		TRANSVERSE MARKINGS CROSSHATCH LINE		TRANSVERSE MARKINGS CROSSWALK LINE		PAVEMENT MESSAGE THERMOPLASTIC LANE INDICATION ARROW	PAVEMENT MESSAGE THERMOPLASTIC WORD "ONLY"	SNOWPLOWABLE RAISED PAVEMENT MARKERS
	SOLID	SOLID	SOLID	SOLID	DOTTED	BROKEN	BROKEN	BROKEN	BROKEN	BROKEN			SOLID	SOLID	SOLID	SOLID			
	WHITE	YELLOW	WHITE	YELLOW	WHITE	WHITE	WHITE	YELLOW	WHITE	YELLOW			YELLOW	YELLOW	WHITE	WHITE			
	6 in	6 in	6 in	6 in	10 IN	6 IN	4 in	4 in	8 in	8 in			24 in	24 in	4 in	8 in			
	ft	ft	ft	ft	ft	ft	ft	ft	ft	ft	ft	ft	ft	ft	ft	ft	EACH	EACH	EACH
PR-W																			
51+50 LT - 54+16 LT			266																
51+50 RT - 54+17 RT			267																
51+50 LT - 55+72 LT				422															
51+50 RT - 55+63 RT				413															
55+63 RT											18								
PR-E																			
70+75 LT											16.5								
70+75 LT - 76+00 LT				525															
70+66 RT - 76+00 RT				534															
72+21 LT - 76+00 LT			379																
72+21 RT - 76+00 RT			379																
PR-S																			
80+52 RT - 81+80 RT				128															
80+52 LT - 81+90 LT				138															
81+80 RT											19								
PR-N																			
11+31 LT											16.5								
11+31 LT- 15+00 LT				369															
11+22 RT - 15+00 RT				378															
13+27 LT - 15+00 LT			173																
12+33 RT - 13+34 RT						25.25													
13+34 RT - 15+00 RT			166																
13+90 RT																	1		
14+90 RT																	1		
PR-R																			
500+00.00 - 500+07.56			9.62																
500+07.56 - 500+28.99					6.88														
500+78.87 - 501+11.43			41.39																
501+11.43 - 501+35.24					7.87														
501+61.56 - 501+94.12			41.39																
501+94.12 - 502+26.61					10.75														
502+43.35 - 502+75.91			41.39																
502+75.91 - 503+06.44					9.70														
503+44.13 - 503+70.71			33.78																

REVISIONS	
	ITEM
09-17-2026	Adjusted South Leg to shorten project.

A&F ENGINEERING
Transportation & Site Engineering
Creating Order Since 1966
8365 Keystone Crossing, Suite 201, Indianapolis, IN. 46240 (317) 202-0864

JEFFREY A. HILL
REGISTERED
No. 10100431
STATE OF INDIANA
PROFESSIONAL ENGINEER

RECOMMENDED FOR APPROVAL — DESIGN ENGINEER — 09/01/2026 DATE

DESIGNED: MCN | DRAWN: MCN
CHECKED: JAH | CHECKED: JAH

INDIANA
DEPARTMENT OF TRANSPORTATION

PAVEMENT MARKINGS TABLE

HORIZONTAL SCALE	BRIDGE FILE
N/A	N/A
VERTICAL SCALE	DESIGNATION
N/A	--
	SHEETS
	27 of 47
	CONTRACT
	--

Z:\2024\24078T-CONTEXT DESIGN, TRAFFIC SIGNAL, SR 32-CENTENNIAL RD PHS 1\DWG\RAB\24078T-STR DATATABLE.DWG

REVISIONS	
	ITEM
09-17-2026	Adjusted South Leg to shorten project.

A&F ENGINEERING
Transportation & Site Engineering
Creating Order Since 1966
8365 Keystone Crossing, Suite 201, Indianapolis, IN. 46240 (317) 202-0864

JEFFREY A. HILL
REGISTERED
No. 10100431
STATE OF INDIANA
PROFESSIONAL ENGINEER

RECOMMENDED FOR APPROVAL — DESIGN ENGINEER — 09/01/2026 DATE

DESIGNED: MCN	DRAWN: MCN
CHECKED: JAH	CHECKED: JAH

INDIANA
DEPARTMENT OF TRANSPORTATION

CROSS SECTIONS
LINE "PR-S"

HORIZONTAL SCALE	BRIDGE FILE
1"=5'	N/A
VERTICAL SCALE	DESIGNATION
1"=5'	--
	SHEETS
	38 of 47
	CONTRACT
	--

Z:\2024\240787-CONTEXT DESIGN, TRAFFIC SIGNAL, SR 32-CENTENNIAL RD PHS 1\DWG\RAB\240789-RAB-XSECT.DWG

Z:\2024\240787-CONTEXT DESIGN, TRAFFIC SIGNAL, SR 32-CENTENNIAL RD PHS 1\DWG\RAB\240787-RAB-XSECT.DWG

REVISIONS	
	ITEM
09-17-2026	Adjusted South Leg to shorten project.

A&F ENGINEERING
Transportation & Site Engineering
Creating Order Since 1966
8365 Keystone Crossing, Suite 201, Indianapolis, IN. 46240 (317) 202-0864

JEFFREY A. HILL
REGISTERED
No. 10100431
STATE OF INDIANA
PROFESSIONAL ENGINEER

RECOMMENDED FOR APPROVAL — DESIGN ENGINEER — 09/01/2026 DATE

DESIGNED: MCN | DRAWN: MCN
CHECKED: JAH | CHECKED: JAH

INDIANA
DEPARTMENT OF TRANSPORTATION

CROSS SECTIONS
LINE "PR-S"

HORIZONTAL SCALE	BRIDGE FILE
1"=5'	N/A
VERTICAL SCALE	DESIGNATION
1"=5'	--
	SHEETS
	39 of 47
	CONTRACT
	--

80+55.00

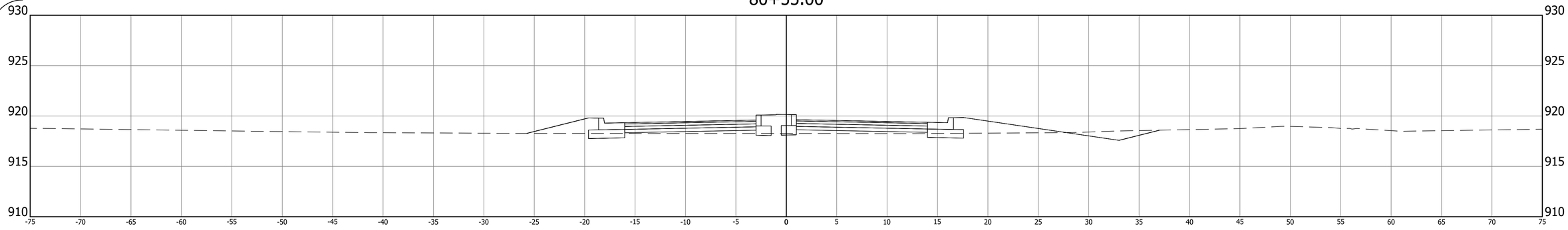

80+34.93

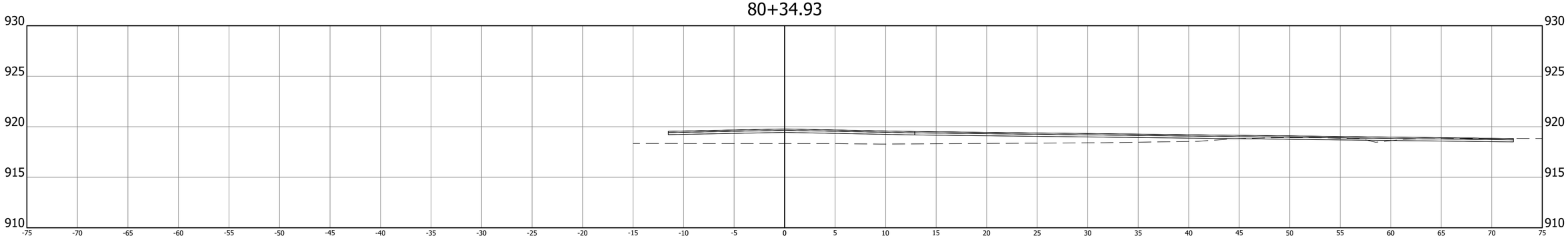

80+00.00

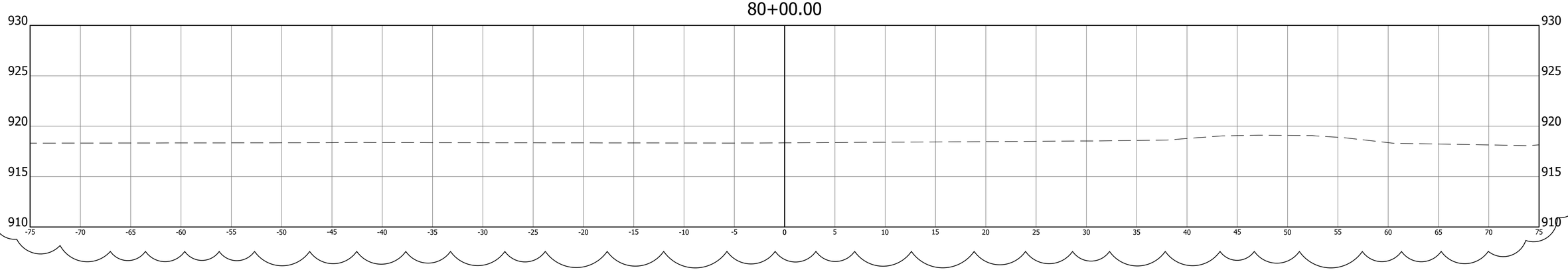

REVISIONS	
	ITEM
09-17-2026	Adjusted South Leg to shorten project.

A&F ENGINEERING
Transportation & Site Engineering
Creating Order Since 1966
8365 Keystone Crossing, Suite 201, Indianapolis, IN. 46240 (317) 202-0864

JEFFREY A. HILL REGISTERED No. 10100431 STATE OF INDIANA PROFESSIONAL ENGINEER

RECOMMENDED FOR APPROVAL — DESIGN ENGINEER — 09/01/2026 DATE

DESIGNED: MCN | DRAWN: MCN

CHECKED: JAH | CHECKED: JAH

INDIANA
DEPARTMENT OF TRANSPORTATION

CROSS SECTIONS
LINE "PR-S"

HORIZONTAL SCALE	BRIDGE FILE
1"=5'	N/A
VERTICAL SCALE	DESIGNATION
1"=5'	--
	SHEETS
	40 of 47
	CONTRACT
	--

Z:\2024\240787-CONTEXT DESIGN, TRAFFIC SIGNAL, SR 32-CENTENNIAL RD PHS 1\DWG\RAB\240787-RAB-XSECT.DWG

WWS NEW MIDDLE SCHOOL WEST
SR32 & Centennial Road Roundabout
Construction Work
LIST OF DRAWINGS

DRAWINGS			
No.	**Drawing Title**	**Drawing Date**	**Revisions**
1 of 47	Title	9/1/2026	
2 of 47	Index and General Notes	9/17/2026	Addendum #23
3 of 47	Typical Sections	9/1/2026	
4 of 47	Typical Sections	9/17/2026	Addendum #23
5 of 47	Plat No. 1	9/17/2026	Addendum #23
6 of 47	Geometric Tie-Up	9/17/2026	Addendum #23
7 of 47	Maintenance of Traffic	9/17/2026	Addendum #23
8 of 47	Maintenance of Traffic Local Detour	9/1/2026	
9 of 47	Maintenance of Traffic State Route Detour	9/1/2026	
10 of 47	Maintenance of Traffic	9/1/2026	
11 of 47	Plan – Line “PR-W” STA. 50+00.00 to STA. 56+00.00	9/1/2026	
12 of 47	Profile – Line “PR-W” STA. 50+00.00 to STA. 56+00.00	9/1/2026	
13 of 47	Plan – Line “PR-E” STA. 70+00.00 to STA. 76+00.00	9/1/2026	
14 of 47	Profile – Line “PR-E” STA. 70+00.00 to STA. 76+00.00	9/1/2026	
15 of 47	Plan – Line “PR-S” STA. 77+00.00 to STA. 83+00.00	9/17/2026	Addendum #23
16 of 47	Profile – Line “PR-S” STA. 77+00.00 to STA. 83+00.00	9/17/2026	Addendum #23
17 of 47	Plan – Line “PR-N” STA. 10+00.00 to STA. 16+00.00	9/1/2026	
18 of 47	Profile – Line “PR-N” STA. 10+00.00 to STA. 16+00.00	9/1/2026	
19 of 47	Plan – Line “PR-R” STA. 500+00.00 to STA. 503+00.00	9/1/2026	
20 of 47	Profile – Line “PR-R” STA. 500+00.00 to STA. 560+00.00	9/1/2026	
21 of 47	Spot Elevation Details	9/17/2026	Addendum #23
22 of 47	Spot Elevation Details	9/1/2026	
23 of 47	Erosion Control	9/17/2026	Addendum #23
24 of 47	Lighting Details	9/11/2026	Addendum #21

WWS NEW MIDDLE SCHOOL WEST
SR32 & Centennial Road Roundabout
Construction Work
LIST OF DRAWINGS

E 807-LTHH-01	Light Handhole Details		Addendum #22
E 807-LTHH-02	Light Handhole Connections		Addendum #22
E 807-LTHH-03	Light Handhole Drain & Cable Marker		Addendum #22
25 of 47	Pavement Markings and Sign Details	9/17/2026	Addendum #23
26 of 47	Sheet Sign Table	9/17/2026	Addendum #23
27 of 47	Pavement Markings Table	9/17/2026	Addendum #23
28 of 47	Structure Data Table	9/1/2026	
29 of 47	Cross Sections Line “PR-W”	9/1/2026	
30 of 47	Cross Sections Line “PR-W”	9/1/2026	
31 of 47	Cross Sections Line “PR-W”	9/1/2026	
32 of 47	Cross Sections Line “PR-W”	9/1/2026	
33 of 47	Cross Sections Line “PR-E”	9/1/2026	
34 of 47	Cross Sections Line “PR-E”	9/1/2026	
35 of 47	Cross Sections Line “PR-E”	9/1/2026	
36 of 47	Cross Sections Line “PR-E”	9/1/2026	
37 of 47	Cross Sections Line “PR-E”	9/1/2026	
38 of 47	Cross Sections Line “PR-S”	9/17/2026	Addendum #23
39 of 47	Cross Sections Line “PR-S”	9/17/2026	Addendum #23
40 of 47	Cross Sections Line “PR-S”	9/17/2026	Addendum #23
41 of 47	Cross Sections Line “PR-S”	9/17/2026	Addendum #23
42 of 47	Cross Sections Line “PR-N”	9/1/2026	
43 of 47	Cross Sections Line “PR-N”	9/1/2026	
44 of 47	Cross Sections Line “PR-N”	9/1/2026	
45 of 47	Cross Sections Line “PR-R”	9/1/2026	
46 of 47	Cross Sections Line “PR-R”	9/1/2026	
47 of 47	Cross Sections Line “PR-R”	9/1/2026	

WWS NEW MIDDLE SCHOOL WEST
SR32 & Centennial Road Roundabout
Construction Work
LIST OF DRAWINGS

Drawings included for reference and coordination ONLY:

1 of 48	COVER SHEET	8/11/2025	
2 of 48	INDEX AND GENERAL NOTES	8/11/2025	
3 of 48	TYPICAL SECTIONS	8/11/2025	
4 of 48	PLAT NO. 1	8/11/2025	
5 of 48	MAINTENANCE OF TRAFFIC	8/11/2025	
6 of 48	MAINTENANCE OF TRAFFIC	8/11/2025	
7 of 48	MAINTENANCE OF TRAFFIC	8/11/2025	
8 of 48	MAINTENANCE OF TRAFFIC	8/11/2025	
9 of 48	MAINTENANCE OF TRAFFIC	8/11/2025	
10 of 48	PLAN – LINE “PR-B” STA. 10+00.00 TO STA. 16+00.00	8/11/2025	
11 of 48	PROFILE – LINE “PR-B” STA. 10+00.00 TO STA. 16+00.00	8/11/2025	
12 of 48	PLAN – LINE “PR-B” 16+00.00 TO 22+00.00	8/11/2025	
13 of 48	PROFILE – LINE “PR-B” STA. 16+00.00 TO STA. 22+00.00	8/11/2025	
14 of 48	PLAN – LINE “PR-B” 22+00.00 TO 28+00.00	8/11/2025	
15 of 48	PROFILE – LINE “PR-B” STA. 22+00.00 TO STA. 25+38.59	8/11/2025	
16 of 48	PLAN – LINE “PR-A” STA. 62+00.00 TO STA. 68+00.00	8/11/2025	
17 of 48	PLAN – LINE “PR-A” STA. 68+00.00 TO STA. 74+00.00	8/11/2025	
18 of 48	CURB RAMP DETAILS	8/11/2025	
19 of 48	EROSION CONTROL DETAIL	8/11/2025	
20 of 48	EROSION CONTROL DETAIL	8/11/2025	
21 of 48	PAVEMENT MARKING DETAILS	8/11/2025	
22 of 48	SHEET SIGN & POST SUMMARY TABLE	8/11/2025	
23 of 48	PAVEMENT MARKINGS SUMMARY OF QUANTITIES	8/11/2025	
24 of 48	MISCELLANEOUS DETAIL	8/11/2025	
25 of 48	PAVEMENT QUANTITIES AND APPROACH TABLE	8/11/2025	

26 of 48	STRUCTURE DATA TABLE	8/11/2025	
27 of 48	CROSS SECTIONS LINE “PR-B”	8/11/2025	
28 of 48	CROSS SECTIONS LINE “PR-B”	8/11/2025	
29 of 48	CROSS SECTIONS LINE “PR-B”	8/11/2025	
30 of 48	CROSS SECTIONS LINE “PR-B”	8/11/2025	
31 of 48	CROSS SECTIONS LINE “PR-B”	8/11/2025	
32 of 48	CROSS SECTIONS LINE “PR-B”	8/11/2025	
33 of 48	CROSS SECTIONS LINE “PR-B”	8/11/2025	
34 of 48	CROSS SECTIONS LINE “PR-B”	8/11/2025	
35 of 48	CROSS SECTIONS LINE “PR-B”	8/11/2025	
36 of 48	CROSS SECTIONS LINE “PR-B”	8/11/2025	
37 of 48	CROSS SECTIONS LINE “PR-B”	8/11/2025	
38 of 48	CROSS SECTIONS LINE “PR-B”	8/11/2025	
39 of 48	CROSS SECTIONS LINE “PR-A”	8/11/2025	
40 of 48	CROSS SECTIONS LINE “PR-A”	8/11/2025	
41 of 48	CROSS SECTIONS LINE “PR-A”	8/11/2025	
42 of 48	CROSS SECTIONS LINE “PR-A”	8/11/2025	
43 of 48	CROSS SECTIONS LINE “PR-A”	8/11/2025	
44 of 48	CROSS SECTIONS LINE “PR-A”	8/11/2025	
45 of 48	CROSS SECTIONS LINE “PR-A”	8/11/2025	
46 of 48	CROSS SECTIONS LINE “PR-A”	8/11/2025	
47 of 48	CROSS SECTIONS LINE “PR-A”	8/11/2025	
48 of 48	CROSS SECTIONS LINE “PR-A”	8/11/2025	
1OF12	Topographic Survey	8/18/2023	BP 03
2OF12	Topographic Survey	8/18/2023	BP 03
3OF12	Topographic Survey	8/18/2023	BP 03

WWS NEW MIDDLE SCHOOL WEST
SR32 & Centennial Road Roundabout
Construction Work
LIST OF DRAWINGS

4OF12	Topographic Survey	8/18/2023	BP 03
5OF12	Topographic Survey	8/18/2023	BP 03
6OF12	Topographic Survey	8/18/2023	BP 03
7OF12	Topographic Survey	8/18/2023	BP 03
8OF12	Topographic Survey	8/18/2023	BP 03
9OF12	Topographic Survey	8/18/2023	BP 03
10OF12	Topographic Survey	8/18/2023	BP 03
11OF12	Topographic Survey	8/18/2023	BP 03
12OF12	Topographic Survey	8/18/2023	BP 03
C100	COVER SHEET	8/8/2025	ASI 26 - Trans Pipe Outlet
C101	EXISTING CONDITIONS & DEMOLITION PLAN	1/22/2025	ASI 09 - Civil TAC Updates
C102	EXISTING CONDITIONS & DEMOLITION PLAN	6/17/2024	BP 03
C250	Index and Typ	6/21/2024	BP 03
C251	PLAN "PR-A" STA. 00+00 TO STA. 5+80	1/22/2025	ASI 09 - Civil TAC Updates
C252	PROFILE "PR-A" STA. 00+00 TO STA. 05+80	1/22/2025	ASI 09 - Civil TAC Updates
C253	PLAN "PR-A" STA. 05+50 TO STA. 11+00	1/22/2025	ASI 09 - Civil TAC Updates
C254	PROFILE "PR-A" STA. 05+50 TO STA. 11+00	1/22/2025	ASI 09 - Civil TAC Updates
C255	PLAN "PR-A" STA. 11+00 TO STA. 15+39	1/22/2025	ASI 09 - Civil TAC Updates
C256	PROFILE "PR-A" STA. 11+00 TO STA. 15+39	1/22/2025	ASI 09 - Civil TAC Updates
C257	PLAN "PR-B" STA. 00+00 TO STA. 05+00	1/22/2025	ASI 09 - Civil TAC Updates
C258	PROFILE "PR-B" STA. 00+00 TO STA. 5+50	6/17/2024	BP 03
C259	PLAN "PR-B" STA. 05+00 TO STA. 07+91	1/22/2025	ASI 09 - Civil TAC Updates
C260	PROFILE "PR-B" STA. 05+50 TO STA. 7+91	6/17/2024	BP 03
C261	PLAN "PR-C" STA. 00+00 TO STA. 06+00	1/22/2025	ASI 09 - Civil TAC Updates
C262	PROFILE "PR-C" STA. 00+00 TO STA. 06+00	6/17/2024	BP 03
C263	PLAN "PR-C" STA. 06+00 TO STA. 12+00	1/22/2025	ASI 09 - Civil TAC Updates
C264	PROFILE "PR-C" STA. 06+00 TO STA. 12+00	6/17/2024	BP 03

C265	PLAN "PR-C" STA. 12+00 TO STA. 17+00	1/22/2025	ASI 09 - Civil TAC Updates
C266	PROFILE "PR-C" STA. 12+00 TO STA. 18+00	6/17/2024	BP 03
C267	PLAN "PR-C" STA. 17+00 TO STA. 23+00	1/22/2025	ASI 09 - Civil TAC Updates
C268	PROFILE "PR-C" STA. 18+00 TO STA. 24+00	6/17/2024	BP 03
C269	PLAN "PR-C" STA. 23+00 TO STA. 29+79	1/22/2025	ASI 09 - Civil TAC Updates
C270	PROFILE "PR-C" STA. 24+00 TO STA. 29+52	9/26/2024	ASI 02 - Civil Updates
C300	OVERALL GRADING PLAN	1/22/2025	ASI 09 - Civil TAC Updates
C301	GRADING PLAN	1/22/2025	ASI 09 - Civil TAC Updates
C302	GRADING PLAN	1/22/2025	ASI 09 - Civil TAC Updates
C303	GRADING PLAN	1/22/2025	ASI 09 - Civil TAC Updates
C304	GRADING PLAN	1/22/2025	ASI 09 - Civil TAC Updates
C305	GRADING PLAN	1/22/2025	ASI 09 - Civil TAC Updates
C306	GRADING PLAN	1/22/2025	ASI 09 - Civil TAC Updates
C307	GRADING PLAN	1/22/2025	ASI 09 - Civil TAC Updates
C401	SWPPP PLAN (INITIAL)	6/17/2024	BP 03
C402	SWPPP PLAN (INITIAL)	6/17/2024	BP 03
C403	SWPPP PLAN (CONST.)	1/22/2025	ASI 09 - Civil TAC Updates
C404	SWPPP PLAN (CONST.)	1/22/2025	ASI 09 - Civil TAC Updates
C405	SWPPP PLAN (FINAL)	1/22/2025	ASI 09 - Civil TAC Updates
C406	SWPPP PLAN (FINAL)	1/22/2025	ASI 09 - Civil TAC Updates
C407	SWPPP PLAN (DETAILS)	6/17/2024	BP 03
C408	SWPPP PLAN (DETAILS)	6/17/2024	BP 03
C409	SWPPP PLAN (INFORMATION)	6/21/2024	BP 03
C410	SWPPP PLAN (INFORMATION)	1/22/2025	ASI 09 - Civil TAC Updates
C500	STRUCTURE DATA TABLE	1/22/2025	ASI 09 - Civil TAC Updates
C500A	PIPE DATA TABLE	1/22/2025	ASI 09 - Civil TAC Updates

WWS NEW MIDDLE SCHOOL WEST
SR32 & Centennial Road Roundabout
Construction Work
LIST OF DRAWINGS

C501	UTILITY PLAN	2/28/2025	ASI 13 - Site Utility Modifications
C502	UTILITY PLAN	2/28/2025	ASI 13 - Site Utility Modifications
C503	UTILITY PLAN	2/28/2025	ASI 13 - Site Utility Modifications
C504	UTILITY PLAN	2/28/2025	ASI 13 - Site Utility Modifications
C505	UTILITY PLAN	1/22/2025	ASI 09 - Civil TAC Updates
C506	UTILITY PLAN	8/20/2025	ASI 26 - Trans Pipe Outlet
C601	SANITARY PLAN & PROFILE	2/28/2025	ASI 13 - Site Utility Modifications
C700	OVERALL UTILITY PLAN	1/22/2025	ASI 09 - Civil TAC Updates
C701	STORM PLAN & PROFILE	1/22/2025	ASI 09 - Civil TAC Updates
C702	STORM PLAN & PROFILE	1/22/2025	ASI 09 - Civil TAC Updates
C703	STORM PLAN & PROFILE	1/22/2025	ASI 09 - Civil TAC Updates
C704	STORM PLAN & PROFILE	2/28/2025	ASI 13 - Site Utility Modifications
C705	STORM PLAN & PROFILE	1/22/2025	ASI 09 - Civil TAC Updates
C706	STORM PLAN & PROFILE	1/22/2025	ASI 09 - Civil TAC Updates
C707	STORM PLAN & PROFILE	1/22/2025	ASI 09 - Civil TAC Updates
C708	STORM PLAN & PROFILE	1/22/2025	ASI 09 - Civil TAC Updates
C709	STORM PLAN & PROFILE	1/22/2025	ASI 09 - Civil TAC Updates
C710	STORM PLAN & PROFILE	1/22/2025	ASI 09 - Civil TAC Updates
C711	STORM PLAN & PROFILE	1/22/2025	ASI 09 - Civil TAC Updates
C712	STORM PLAN & PROFILE	1/22/2025	ASI 09 - Civil TAC Updates
C713	STORM PLAN & PROFILE	1/22/2025	ASI 09 - Civil TAC Updates
C901	SITE DETAILS	1/22/2025	ASI 09 - Civil TAC Updates

WWS NEW MIDDLE SCHOOL WEST
SR32 & Centennial Road Roundabout
Construction Work
LIST OF DRAWINGS

C902	SITE DETAILS	6/17/2024	BP 03
C903	SITE DETAILS	6/21/2024	BP 03
C904	SITE DETAILS	1/22/2025	ASI 09 - Civil TAC Updates
C905	SITE DETAILS	1/22/2025	ASI 09 - Civil TAC Updates
C906	SITE DETAILS	9/26/2024	ASI 02 - Civil Updates
C907	SITE DETAILS	2/28/2025	ASI 13 - Site Utility Modifications
L010	TREE PRESERVATION PLAN	12/6/2024	Conformed Set (12/06/2024)
L100	REFERENCE PLAN	12/6/2024	Conformed Set (12/06/2024)
L101	MATERIALS & NOTES	12/6/2024	Conformed Set (12/06/2024)
L102	MATERIALS & NOTES	12/6/2024	Conformed Set (12/06/2024)
L103	MATERIALS & NOTES	12/6/2024	Conformed Set (12/06/2024)
L104	MATERIALS & NOTES	12/6/2024	Conformed Set (12/06/2024)
L105	MATERIALS & NOTES	12/6/2024	Conformed Set (12/06/2024)
L106	MATERIALS & NOTES	12/6/2024	Conformed Set (12/06/2024)
L107	MATERIALS & NOTES	12/6/2024	Conformed Set (12/06/2024)
L108	MATERIALS & NOTES	12/6/2024	Conformed Set (12/06/2024)
L201	LAYOUT PLAN	12/6/2024	Conformed Set (12/06/2024)
L202	LAYOUT PLAN	12/6/2024	Conformed Set (12/06/2024)
L203	LAYOUT PLAN	12/6/2024	Conformed Set (12/06/2024)
L204	LAYOUT PLAN	12/6/2024	Conformed Set (12/06/2024)
L205	LAYOUT PLAN	12/6/2024	Conformed Set (12/06/2024)
L206	LAYOUT PLAN	12/6/2024	Conformed Set (12/06/2024)
L207	LAYOUT PLAN	12/6/2024	Conformed Set (12/06/2024)
L208	LAYOUT PLAN	12/6/2024	Conformed Set (12/06/2024)

L301	ENLARGED ATHLETIC PLANS	12/6/2024	Conformed Set (12/06/2024)
L302	ENLARGED ATHLETIC PLANS	12/6/2024	Conformed Set (12/06/2024)
L303	ENLARGED ATHLETIC PLANS	11/22/2024	ASI 04 - Irrigation Room Dugout
L304	ENLARGED ATHLETIC PLANS	12/6/2024	Conformed Set (12/06/2024)
L305	ENLARGED ATHLETIC PLANS	12/6/2024	Conformed Set (12/06/2024)
L306	ENLARGED ATHLETIC PLANS	12/6/2024	Conformed Set (12/06/2024)
L307	ENLARGED ATHLETIC PLANS	12/6/2024	Conformed Set (12/06/2024)
L308	BLEACHER AND PRESS BOX PLANS & DETAILS	12/6/2024	Conformed Set (12/06/2024)
L309	BLEACHER AND PRESS BOX PLANS & DETAILS	12/6/2024	Conformed Set (12/06/2024)
L310	BLEACHER AND PRESS BOX PLANS & DETAILS	12/6/2024	Conformed Set (12/06/2024)
L311	BLEACHER AND PRESS BOX PLANS & DETAILS	12/6/2024	Conformed Set (12/06/2024)
L312	BLEACHER AND PRESS BOX PLANS & DETAILS	12/6/2024	Conformed Set (12/06/2024)
L313	BLEACHER AND PRESS BOX PLANS & DETAILS	12/6/2024	Conformed Set (12/06/2024)
L314	BLEACHER AND PRESS BOX PLANS & DETAILS	12/6/2024	Conformed Set (12/06/2024)
L315	BLEACHER AND PRESS BOX PLANS & DETAILS	12/6/2024	Conformed Set (12/06/2024)
L316	BLEACHER AND PRESS BOX PLANS & DETAILS	12/6/2024	Conformed Set (12/06/2024)
L317	BLEACHER AND PRESS BOX PLANS & DETAILS	12/6/2024	Conformed Set (12/06/2024)
L318	BLEACHER AND PRESS BOX PLANS & DETAILS	12/6/2024	Conformed Set (12/06/2024)
L401	PLANTING PLAN	12/6/2024	Conformed Set (12/06/2024)
L402	PLANTING PLAN	12/6/2024	Conformed Set (12/06/2024)
L403	PLANTING PLAN	12/6/2024	Conformed Set (12/06/2024)
L404	PLANTING PLAN	7/26/2024	Conformed Set (12/06/2024)
L405	PLANTING PLAN	7/26/2024	Conformed Set (12/06/2024)
L406	PLANTING PLAN	7/26/2024	Conformed Set (12/06/2024)

WWS NEW MIDDLE SCHOOL WEST
SR32 & Centennial Road Roundabout
Construction Work
LIST OF DRAWINGS

L407	PLANTING PLAN	7/26/2024	Conformed Set (12/06/2024)
L408	PLANTING PLAN	7/26/2024	Conformed Set (12/06/2024)
L500	SITE DETAILS	12/6/2024	Conformed Set (12/06/2024)
L501	SITE DETAILS	12/6/2024	Conformed Set (12/06/2024)
L502	SITE DETAILS	12/6/2024	Conformed Set (12/06/2024)
L510	ATHLETIC DETAILS	12/6/2024	Conformed Set (12/06/2024)
L511	ATHLETIC DETAILS	12/6/2024	Conformed Set (12/06/2024)
L512	ATHLETIC DETAILS	12/6/2024	Conformed Set (12/06/2024)

END OF SECTION

CONTRACTOR'S BID FOR PUBLIC WORK - FORM 96

State Form 52414 (R2 / 2-13) / Form 96 (Revised 2013)
Prescribed by State Board of Accounts

PART I
(To be completed for all bids. Please type or print)

Date *(month, day, year):*_____

1. Governmental Unit (Owner):_____
2. County :_____
3. Bidder (Firm):_____

   Address:_____

   City/State/ZIPcode:_____
4. Telephone Number:_____
5. Agent of Bidder *(if applicable):*_____

Pursuant to notices given, the undersigned offers to furnish labor and/or material necessary to complete the public works project of _____

(Governmental Unit) in accordance with plans and specifications prepared by _____

_____ and dated _____ for the sum of

_____ $_____

The undersigned further agrees to furnish a bond or certified check with this bid for an amount specified in the notice of the letting. If alternative bids apply, the undersigned submits a proposal for each in accordance with the notice. Any addendums attached will be specifically referenced at the applicable page.

If additional units of material included in the contract are needed, the cost of units must be the same as that shown in the original contract if accepted by the governmental unit. If the bid is to be awarded on a unit basis, the itemization of the units shall be shown on a separate attachment.

The contractor and his subcontractors, if any, shall not discriminate against or intimidate any employee, or applicant for employment, to be employed in the performance of this contract, with respect to any matter directly or indirectly related to employment because of race, religion, color, sex, national origin or ancestry. Breach of this covenant may be regarded as a material breach of the contract.

CERTIFICATION OF USE OF UNITED STATES STEEL PRODUCTS
(If applicable)

I, the undersigned bidder or agent as a contractor on a public works project, understand my statutory obligation to use steel products made in the United States (I.C. 5-16-8-2). I hereby certify that I and all subcontractors employed by me for this project will use U.S. steel products on this project if awarded. I understand that violations hereunder may result in forfeiture of contractual payments.

ACCEPTANCE

The above bid is accepted this _____ day of _____, _____, subject to the following conditions: _____

_____

Contracting Authority Members:

_____ _____

_____ _____

_____ _____

PART II

(For projects of $150,000 or more – IC 36-1-12-4)

Governmental Unit: _____

Bidder (Firm) _____

Date *(month, day, year):* _____

These statements to be submitted under oath by each bidder with and as a part of his bid. Attach additional pages for each section as needed.

SECTION I EXPERIENCE QUESTIONNAIRE

1. What public works projects has your organization completed for the period of one (1) year prior to the date of the current bid?

Contract Amount	Class of Work	Completion Date	Name and Address of Owner

2. What public works projects are now in process of construction by your organization?

Contract Amount	Class of Work	Expected Completion Date	Name and Address of Owner

3. Have you ever failed to complete any work awarded to you? _____ If so, where and why?

_____

_____

_____

4. List references from private firms for which you have performed work.

_____

_____

_____

_____

_____

SECTION II PLAN AND EQUIPMENT QUESTIONNAIRE

1. Explain your plan or layout for performing proposed work. *(Examples could include a narrative of when you could begin work, complete the project, number of workers, etc. and any other information which you believe would enable the governmental unit to consider your bid.)*

_____

_____

_____

_____

_____

2. Please list the names and addresses of all subcontractors *(i.e. persons or firms outside your own firm who have performed part of the work)* that you have used on public works projects during the past five (5) years along with a brief description of the work done by each subcontractor.

_____

_____

_____

_____

_____

3. If you intend to sublet any portion of the work, state the name and address of each subcontractor, equipment to be used by the subcontractor, and whether you will require a bond. However, if you are unable to currently provide a listing, please understand a listing must be provided prior to contract approval. Until the completion of the proposed project, you are under a continuing obligation to immediately notify the governmental unit in the event that you subsequently determine that you will use a subcontractor on the proposed project.

_____

_____

_____

_____

_____

4. What equipment do you have available to use for the proposed project? Any equipment to be used by subcontractors may also be required to be listed by the governmental unit.

_____

_____

_____

_____

_____

5. Have you entered into contracts or received offers for all materials which substantiate the prices used in preparing your proposal? If not, please explain the rationale used which would corroborate the prices listed.

_____

_____

_____

_____

_____

SECTION III CONTRACTOR'S FINANCIAL STATEMENT

Attachment of bidder's financial statement is mandatory. Any bid submitted without said financial statement as required by statute shall thereby be rendered invalid. The financial statement provided hereunder to the governing body awarding the contract must be specific enough in detail so that said governing body can make a proper determination of the bidder's capability for completing the project if awarded.

SECTION IV CONTRACTOR'S NON – COLLUSION AFFIDAVIT

The undersigned bidder or agent, being duly sworn on oath, says that he has not, nor has any other member, representative, or agent of the firm, company, corporation or partnership represented by him, entered into any combination, collusion or agreement with any person relative to the price to be bid by anyone at such letting nor to prevent any person from bidding nor to include anyone to refrain from bidding, and that this bid is made without reference to any other bid and without any agreement, understanding or combination with any other person in reference to such bidding.

He further says that no person or persons, firms, or corporation has, have or will receive directly or indirectly, any rebate, fee, gift, commission or thing of value on account of such sale.

SECTION V OATH AND AFFIRMATION

I HEREBY AFFIRM UNDER THE PENALTIES FOR PERJURY THAT THE FACTS AND INFORMATION CONTAINED IN THE FOREGOING BID FOR PUBLIC WORKS ARE TRUE AND CORRECT.

Dated at _____ this _____ day of _____, _____

_____
(Name of Organization)

By_____

_____
(Title of Person Signing)

ACKNOWLEDGEMENT

STATE OF _____)
) ss
COUNTY OF_____)

Before me, a Notary Public, personally appeared the above-named _____ and swore that the statements contained in the foregoing document are true and correct.

Subscribed and sworn to before me this _____ day of _____, _____.

_____
Notary Public

My Commission Expires:_____

County of Residence:_____

BID OF

_____
(Contractor)

_____
(Address)

_____

FOR

PUBLIC WORKS PROJECTS

OF

_____

_____

_____

Filed _____, _____

Action taken _____

_____